UNIVER®
Industrial Automation

since 1971
KNOW-HOW
RESEARCH
INNOVATION

Technical **catalogue**

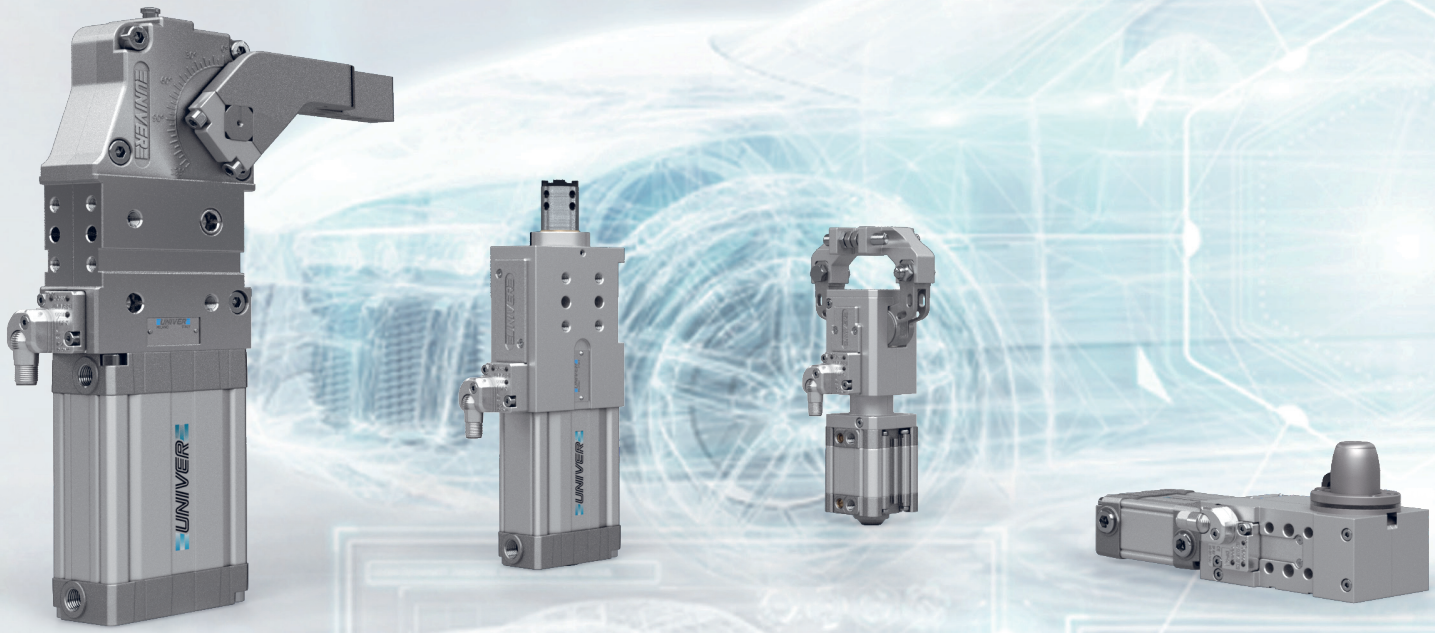

AUTOMOTIVE

INDEX

1 MINICLAMP
PNEUMATIC POWER CLAMPS 5

2 UNICLAMP BLUECLAMP air saving
PNEUMATIC POWER CLAMPS 19

3 UNICLAMP
PNEUMATIC RETRACATABLE LOCATING PIN UNITS 135

4 UNICLAMP
PNEUMATIC GRIPPER UNITS 199

5 UNICLAMP
PNEUMATIC POWER PIVOTS 225

6 UNICLAMP
PNEUMATIC PIN CLAMPS 313

7 UNICLAMP
PNEUMATIC MARKING UNITS 345

1

MINICLAMP

PNEUMATIC POWER CLAMPS

Ø25-32mm

UCBP25 2
UCBP32 5

Ø25-32mm with hand lever

UCBM25 8
UCBM32 11

UCBP 25

Pneumatic power clamps Ø25 mm

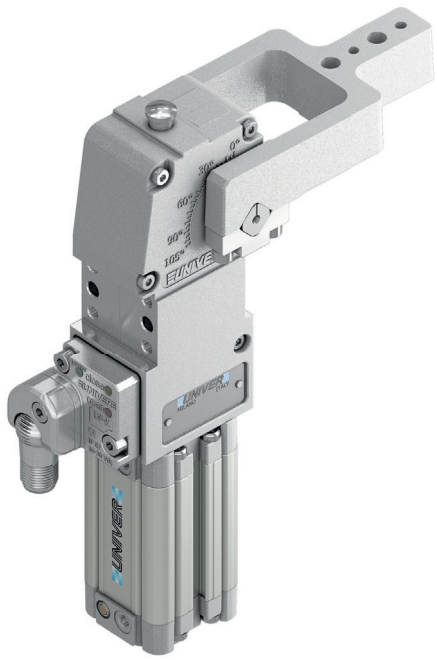

Pneumatic Miniclamps with compensation system, toggle-joint mechanism and stepless adjustable opening angle, typically used for handling and blocking pieces in assembly process.

- Compact dimensions and lightweight
- Integrated compensation up to 0,9 mm
- Version with hand lever available
- Fully optical electronic sensor or pneumatic sensor
- Fixing pattern on 2 sides (front and back)
- Manual unlocking in case of air loss
- Wishbone clamping arm in aluminium

CHARACTERISTICS

Operating temperature	**5° ÷ 45° C**
Min./Max. Operating pressure	**0,4 / 0,6 MPa**
Opening angle*	**0° ÷ 105°**
Bore Ø	**25 mm**
Holding moment	**75 Nm**
Clamping moment (0,5 MPa)	**25 Nm**
Weight (clamping arm not included)	**0,8 Kg**
Pneumatic supply ports	**M5**
Sensor	**electronic (optical)**
Supply voltage	**10 ÷ 30 Vdc**
IP code	**IP65**

**The opening angle range may vary according to the arm position and style.*

COMPENSATION

LIGHTWEIGHT

IRREVERSIBLE

ANGLE ADJUSTMENT

OPTICAL SENSOR

CODIFICATION KEY

UC	B	P	25	**O**	**B**	**A**	**K**	0	
1	2	3	4	5	6	7	8	9	10

1 SERIES
UC = UNICLAMP Power clamps

2 STANDARD
B = European standard

3 VERSION
P = Pneumatic

4 SIZE
25 = Ø 25mm

5 ARM POSITION

V = 90°

O = 180°

N = No arm

6 ARM STYLE
B = Central, 0mm offset
C = Central, 10mm offset
N = No arm
For other versions contact our Sales Dept.

7 ARM TYPE
A = Aluminium
N = No arm

8 SENSOR
N = No sensor (with protection plate)
K = Electronic sensor PNP, M12 (DF-K)
D = Pneumatic sensor (DF-UPNWS)
Y = Electronic sensor PNP, M12 (DF-Y) white LED
J = Electronic sensor NPN, M12 (DF-J)

9 PRODUCT REVISION
Assigned by UNIVER

10 ATEX
X = ATEX option
See ATEX Catalogue for types and versions

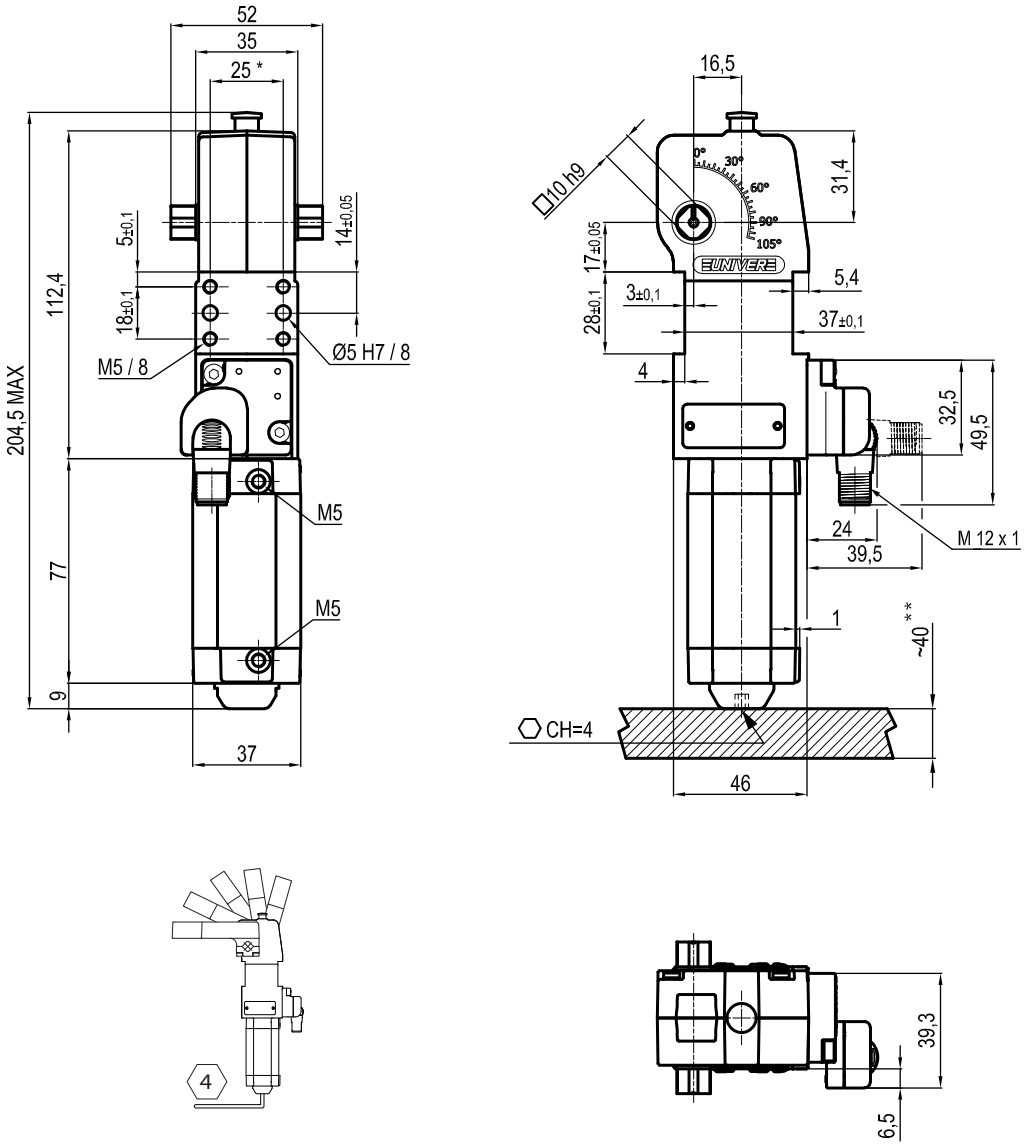

**TOLERANCE BETWEEN DOWELS ± 0,02 BETWEEN SCREW HOLES ± 0,1*
***AREA TO ACCESS ANGLE ADJUSTMENT*

Maximum Applicable Load

Pressure: 5 bar - 90° cycle time (Open - Close)

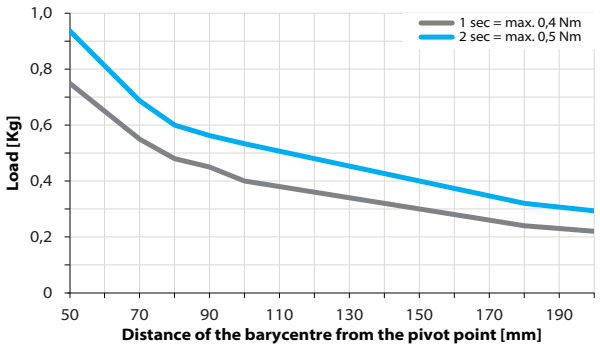

Air Consumption per Cycle

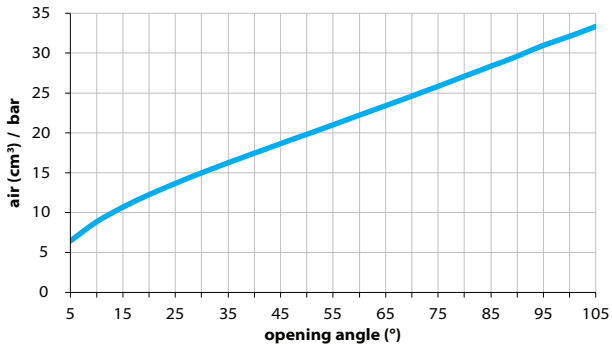

Clamping Arms

Arm Offset 0mm

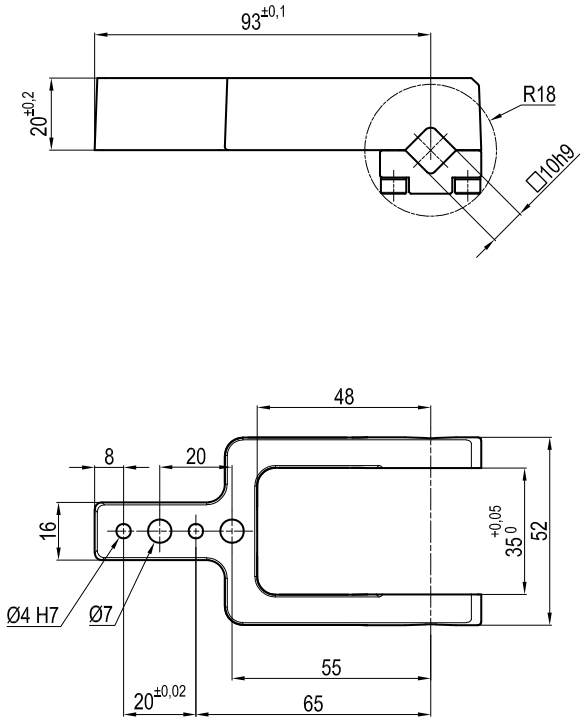

Arm Offset 10mm

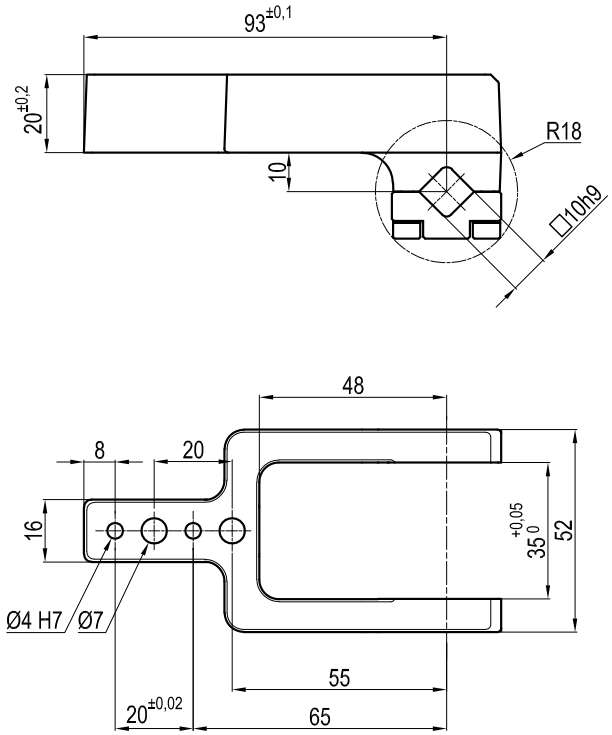

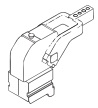

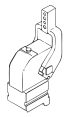

Armcode	Offset	Material	Arm style	Weight (Kg)	Opening angle (90°)	Opening angle (180°)
LKP25B	0	ALUMINIUM	CENTRAL	0,13	0÷105°	0÷105°
LKP25C	10	ALUMINIUM	CENTRAL	0,15	0÷105°	0÷105°

Sensors

Electronic (optical)

DF-K PNP M12
DF-J NPN M12
DF-Y PNP M12 White LED

Pneumatic

DF-UPNWS

UCBP 32

Pneumatic power clamps Ø32 mm

Pneumatic Miniclamps with compensation system, toggle-joint mechanism and stepless adjustable opening angle, typically used for handling and blocking pieces in assembly process.

- Compact dimensions and lightweight
- Integrated compensation up to 1,3 mm
- Version with hand lever available
- Fully optical electronic sensor or pneumatic sensor
- Fixing pattern on 4 sides
- Manual unlocking in case of air loss
- Self holding system for open position available
- Wishbone clamping arm in aluminium

CHARACTERISTICS

Operating temperature	**5° ÷ 45° C**
Min./Max. Operating pressure	**0,4 / 0,6 MPa**
Opening angle*	**0° ÷ 135°**
Bore Ø	**32 mm**
Holding moment	**250 Nm**
Clamping moment (0,5 MPa)	**75 Nm**
Weight (clamping arm not included)	**1,3 Kg**
Pneumatic supply ports	**G1/8**
Sensor	**electronic (optical)**
Supply voltage	**10 ÷ 30 Vdc**
IP code	**IP65**

**The opening angle range may vary according to the arm position and style.*

COMPENSATION

LIGHTWEIGHT

IRREVERSIBLE

ANGLE ADJUSTMENT

OPTICAL SENSOR

CODIFICATION KEY

UC	B	P	32	O	E	A	K	0	
1	2	3	4	5	6	7	8	9	10

1 SERIES
UC = UNICLAMP Power clamps

2 STANDARD
B = European standard

3 VERSION
P = Pneumatic

4 SIZE
32 = Ø 32mm

5 ARM POSITION

V = 90°

O = 180°

N = No arm

6 ARM STYLE
B = Central, 0mm offset
C = Central, 10mm offset
E = Central, 25mm offset
N = No arm
For other versions contact our Sales Dept.

7 ARM TYPE
A = Aluminium
N = No arm

8 SENSOR
N = No sensor (with protection plate)
K = Electronic sensor PNP, M12 (DF-K)
D = Pneumatic sensor
Y = Electronic sensor PNP, M12 (DF-Y) white LED
J = Electronic sensor NPN, M12 (DF-J)

9 PRODUCT REVISION
Assigned by UNIVER

10 ATEX
X = ATEX option
See ATEX Catalogue for types and versions

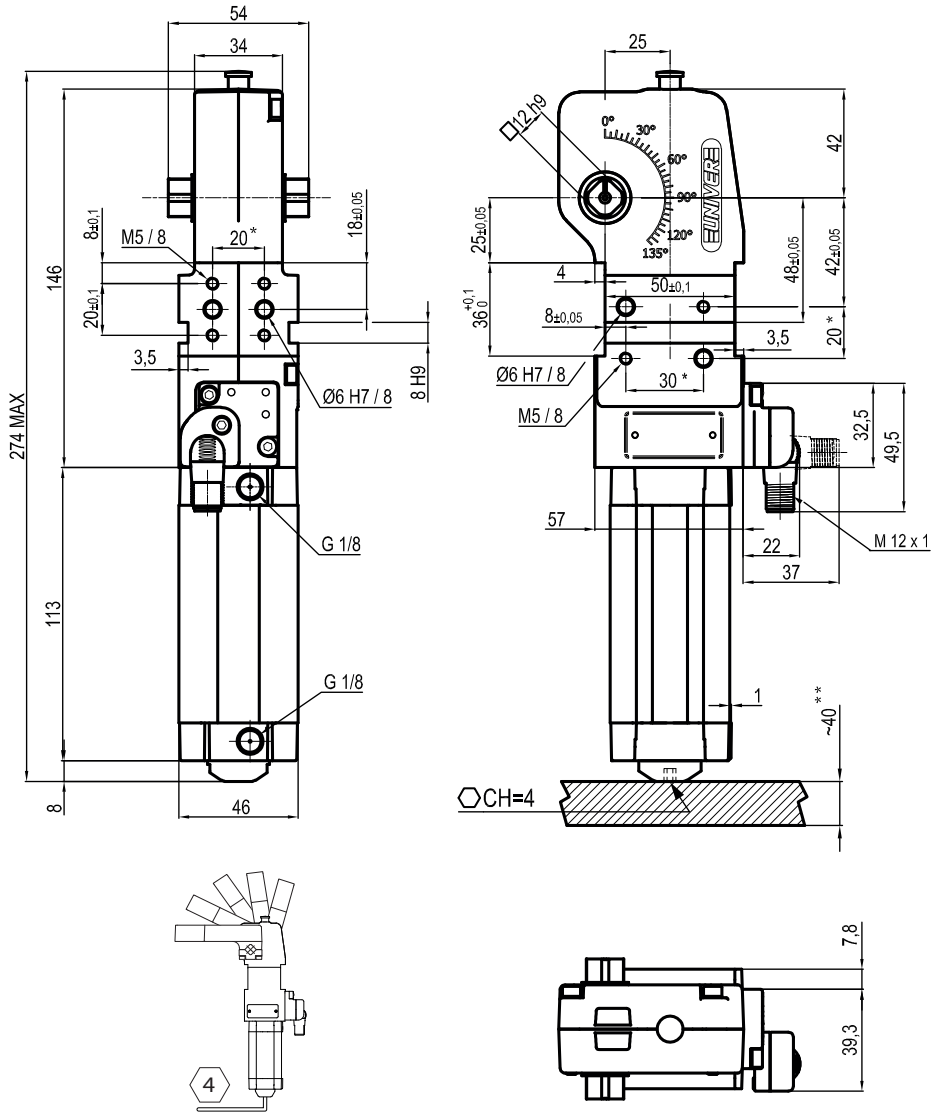

**TOLERANCE BETWEEN DOWELS ± 0,02 BETWEEN SCREW HOLES ± 0,1*
***AREA TO ACCESS ANGLE ADJUSTMENT*

Maximum Applicable Load

Pressure: 5 bar - 90° cycle time (Open - Close)

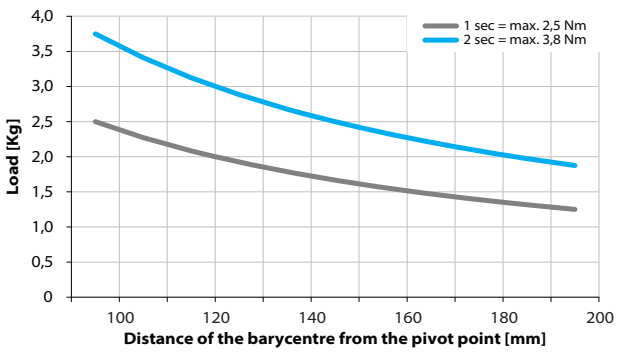

Air Consumption per Cycle

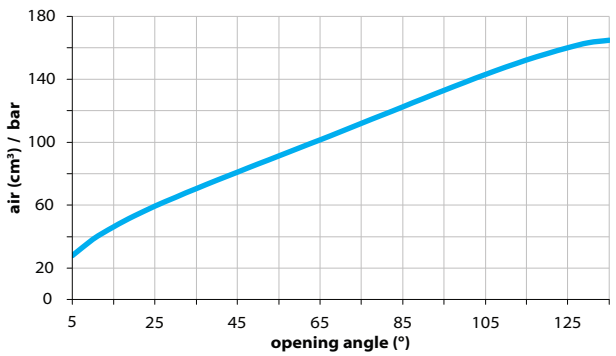

Clamping Arms

Arm Offset 0mm

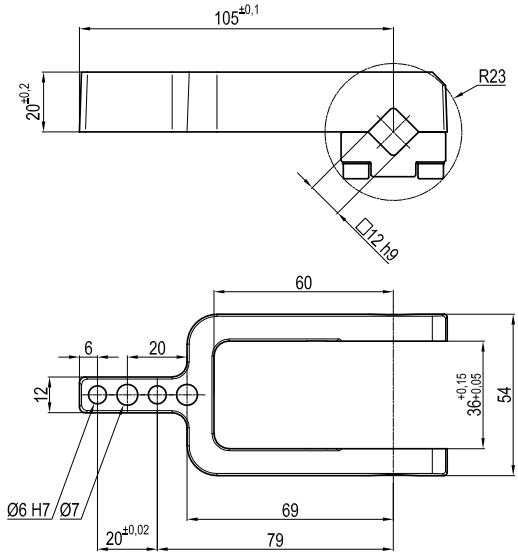

Arm Offset 10mm

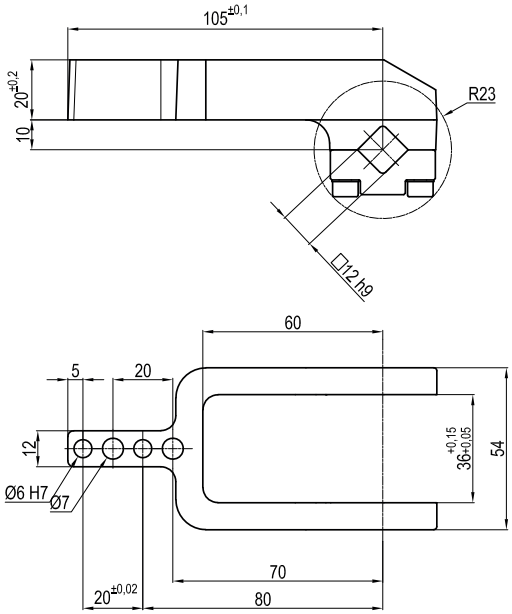

Arm Offset 25mm

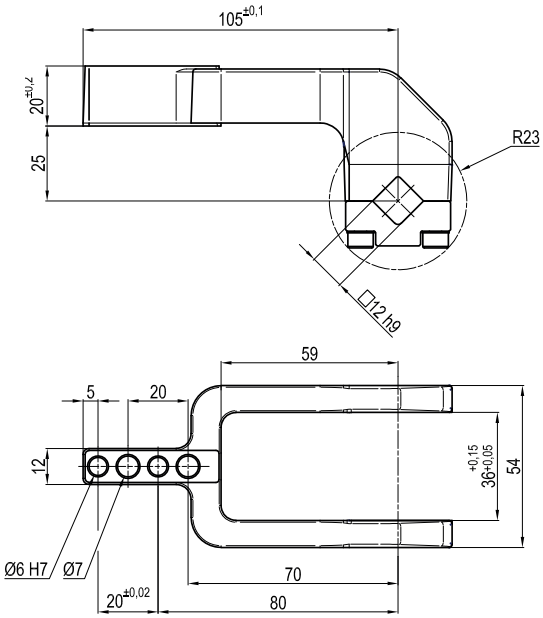

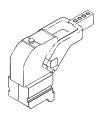

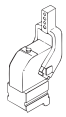

Armcode	Offset	Material	Arm style	Weight (Kg)	Opening angle (90°)	Opening angle (180°)
LKP32B	0	ALUMINIUM	CENTRAL	0,15	0÷135°	0÷105°
LKP32C	10	ALUMINIUM	CENTRAL	0,15	0÷135°	0÷120°
LKP32E	25	ALUMINIUM	CENTRAL	0,15	0÷135°	0÷125°

Sensors

Electronic (optical)

DF-K PNP M12
DF-J NPN M12
DF-Y PNP M12 White LED

Accessories

Self holding system

UBK46P12

UCBM 25

Pneumatic power clamps Ø25 mm with hand lever

Pneumatic Miniclamps with compensation system, toggle-joint mechanism and stepless adjustable opening angle, typically used for handling and blocking pieces in assembly process.

- Compact dimensions and lightweight
- Integrated compensation up to 0,9 mm
- Hand lever mount on both sides
- Fully optical electronic sensor or pneumatic sensor
- Fixing pattern on 2 sides (front and back)
- Manual unlocking in case of air loss
- Wishbone clamping arm in aluminium

CHARACTERISTICS

Operating temperature	**5° ÷ 45° C**
Min./Max. Operating pressure	**0,4 / 0,6 MPa**
Opening angle*	**0° ÷ 95°**
Bore Ø	**25 mm**
Holding moment	**75 Nm**
Clamping moment (0,5 MPa)	**25 Nm**
Weight (clamping arm not included)	**0,9 Kg**
Pneumatic supply ports	**M5**
Sensor	**electronic (optical)**
Supply voltage	**10 ÷ 30 Vdc**
IP code	**IP65**

**The opening angle range may vary according to the arm position and style.*

COMPENSATION

LIGHTWEIGHT

IRREVERSIBLE

ANGLE ADJUSTMENT

OPTICAL SENSOR

CODIFICATION KEY

UC	B	M	25	O	B	A	K	0	
1	2	3	4	5	6	7	8	9	10

1 SERIES
UC = UNICLAMP Power clamps

2 STANDARD
B = European standard

3 VERSION
M = Pneumatic with hand lever

4 SIZE
25 = Ø 25mm

5 ARM POSITION

V = 90°

O = 180°

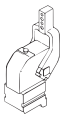

N = No arm

6 ARM STYLE
B = Central, 0mm offset
C = Central, 10mm offset
N = No arm
For other versions contact our Sales Dept.

7 ARM TYPE
A = Aluminium
N = No arm

8 SENSOR
N = No sensor (with protection plate)
K = Electronic sensor PNP, M12 (DF-K)
D = Pneumatic sensor (DF-UPNWS)
Y = Electronic sensor PNP, M12 (DF-Y) white LED
J = Electronic sensor NPN, M12 (DF-J)

9 PRODUCT REVISION
Assigned by UNIVER

10 ATEX
X = ATEX option
See ATEX Catalogue for types and versions

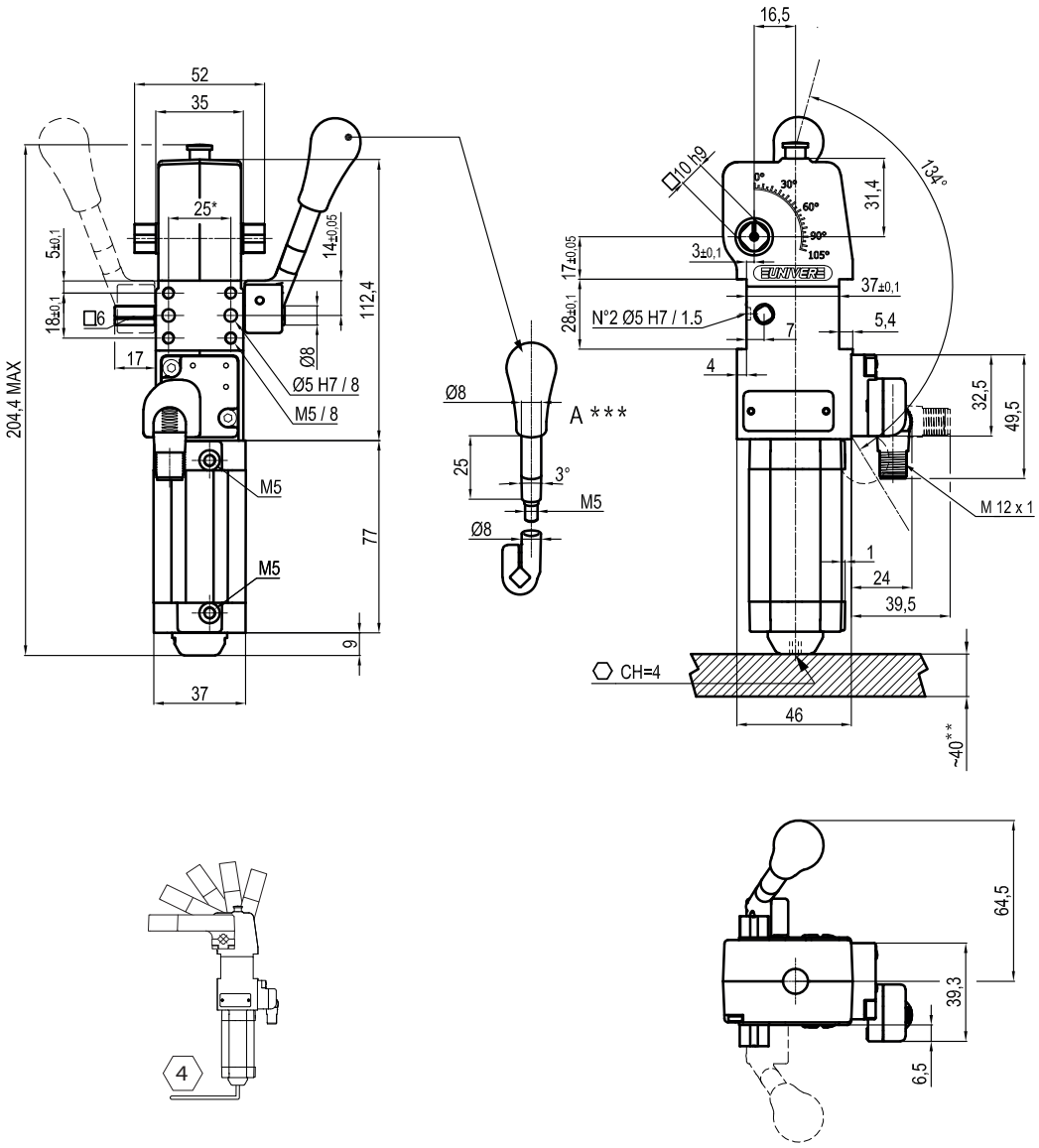

**AREA TO ACCESS ANGLE ADJUSTMENT*
***DIMENSIONS TO BE RESPECTED IN CASE OTHER MANUAL LEVERS ARE USED*

Maximum Applicable Load

Pressure: 5 bar - 90° cycle time (Open - Close)

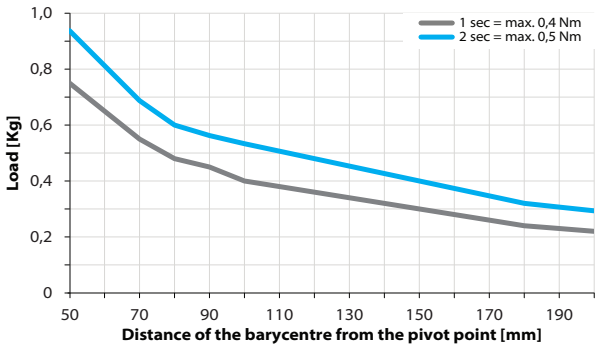

Air Consumption per Cycle

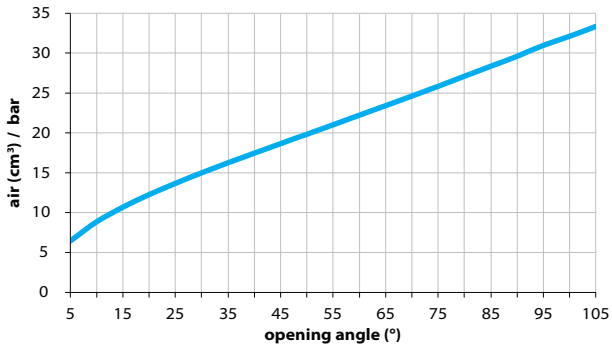

Clamping Arms

Arm Offset 0mm

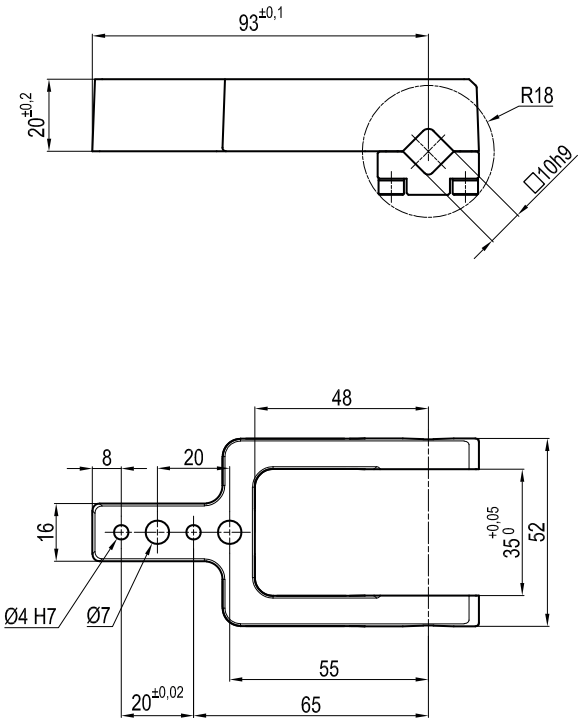

Arm Offset 10mm

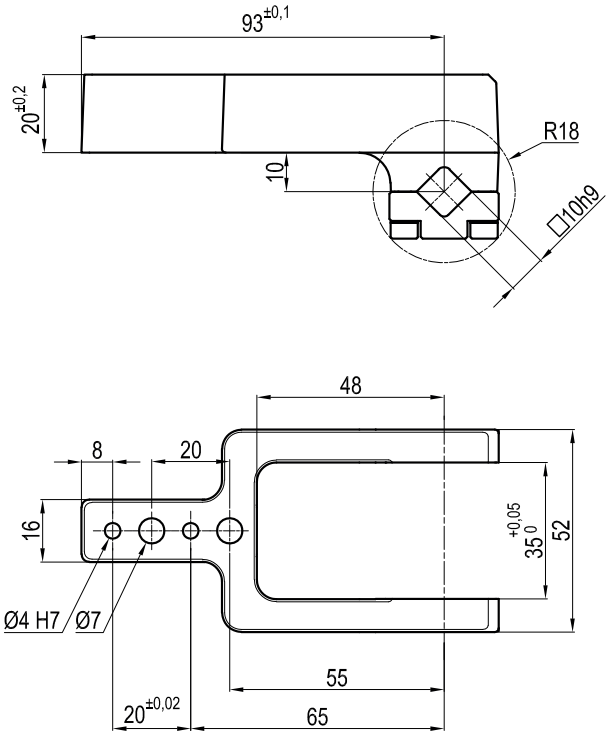

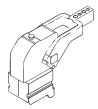

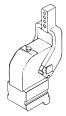

Armcode	Offset	Material	Arm style	Weight (Kg)	Opening angle (90°)	Opening angle (180°)
LKP25B	0	ALUMINIUM	CENTRAL	0,13	0÷95°	0÷95°
LKP25C	10	ALUMINIUM	CENTRAL	0,15	0÷95°	0÷95°

Sensors

Electronic (optical)

DF-K PNP M12
DF-J NPN M12
DF-Y PNP M12 White LED

Pneumatic

DF-UPNWS

Accessories

Handlever

UBF252532

UCBM 32

Pneumatic power clamps Ø32 mm with hand lever

Pneumatic Miniclamps with compensation system, toggle-joint mechanism and stepless adjustable opening angle, typically used for handling and blocking pieces in assembly process.

- Compact dimensions and lightweight
- Integrated compensation up to 1,3 mm
- Hand lever mount on both sides
- Fully optical electronic sensor or pneumatic sensor
- Fixing pattern on 4 sides
- Manual unlocking in case of air loss
- Self holding system for open position available
- Wishbone clamping arm in aluminium

CHARACTERISTICS

Operating temperature	**5° ÷ 45° C**
Min./Max. Operating pressure	**0,4 / 0,6 MPa**
Opening angle*	**0° ÷ 105°**
Bore Ø	**32 mm**
Holding moment	**250 Nm**
Clamping moment (0,5 MPa)	**75 Nm**
Weight (clamping arm not included)	**1,4 Kg**
Pneumatic supply ports	**G1/8**
Sensor	**electronic (optical)**
Supply voltage	**10 ÷ 30 Vdc**
IP code	**IP65**

**The opening angle range may vary according to the arm position and style.*

CODIFICATION KEY

UC	B	M	32	O	E	A	K	0	
1	2	3	4	5	6	7	8	9	10

COMPENSATION

LIGHTWEIGHT

IRREVERSIBLE

ANGLE ADJUSTMENT

OPTICAL SENSOR

1 SERIES
UC = UNICLAMP Power clamps

2 STANDARD
B = European standard

3 VERSION
M = Pneumatic with hand lever

4 SIZE
32 = Ø 32mm

5 ARM POSITION

V = 90°

O = 180°

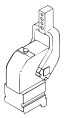

N = No arm

6 ARM STYLE
B = Central, 0mm offset
C = Central, 10mm offset
E = Central, 25mm offset
N = No arm
For other versions contact our Sales Dept.

7 ARM TYPE
A = Aluminium
N = No arm

8 SENSOR
N = No sensor (with protection plate)
K = Electronic sensor PNP, M12 (DF-K)
D = Pneumatic sensor
Y = Electronic sensor PNP, M12 (DF-Y) white LED
J = Electronic sensor NPN, M12 (DF-J)

9 PRODUCT REVISION
Assigned by UNIVER

10 ATEX
X = ATEX option
See ATEX Catalogue for types and versions

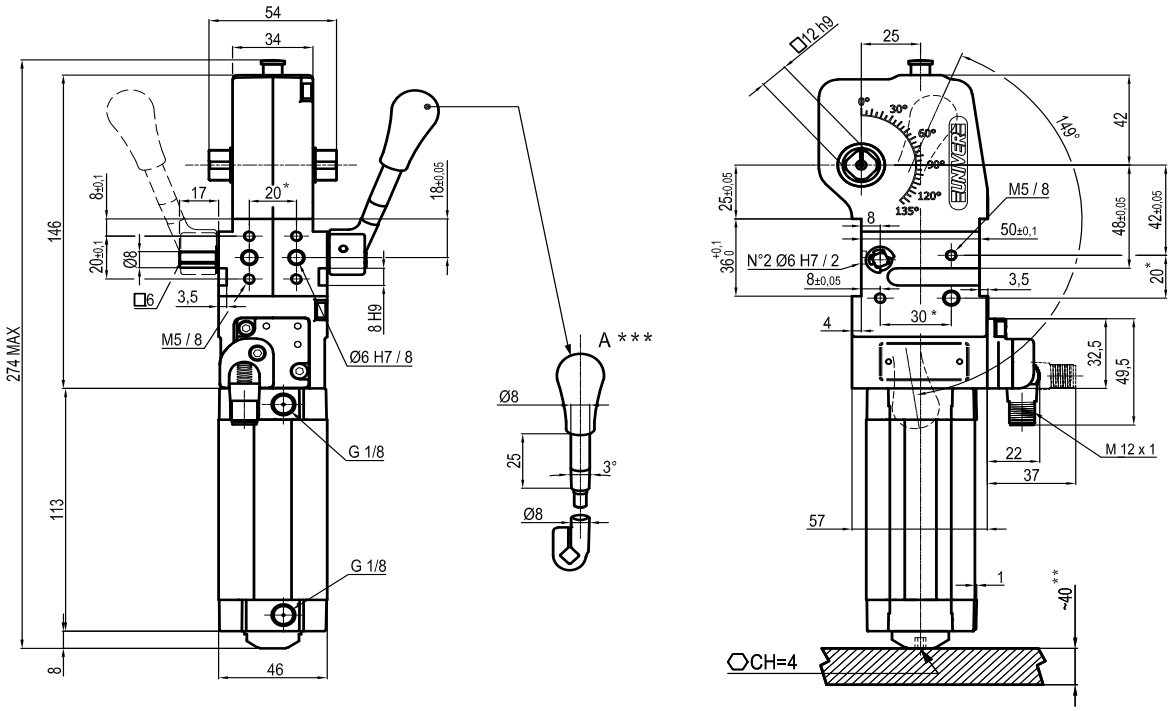

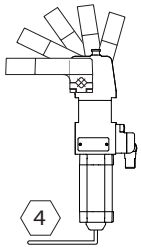

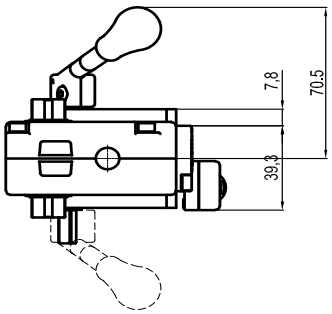

** TOLERANCE BETWEEN DOWELS ± 0,02, BETWEEN SCREW HOLES ± 0,1*
***AREA TO ACCESS ANGLE ADJUSTMENT*
****DIMENSIONS TO BE RESPECTED IN CASE OF OTHER MANUAL LEVERS ARE USED*

Maximum Applicable Load

Pressure: 5 bar - 90° cycle time (Open - Close)

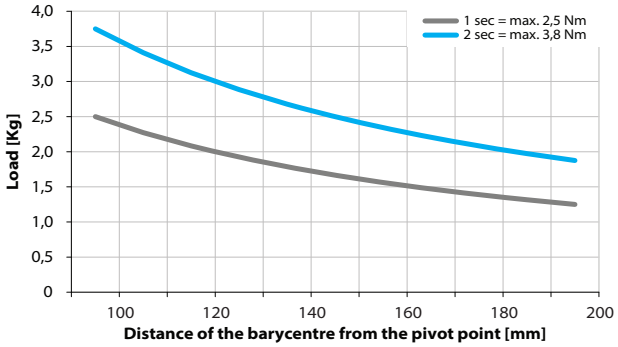

Air Consumption per Cycle

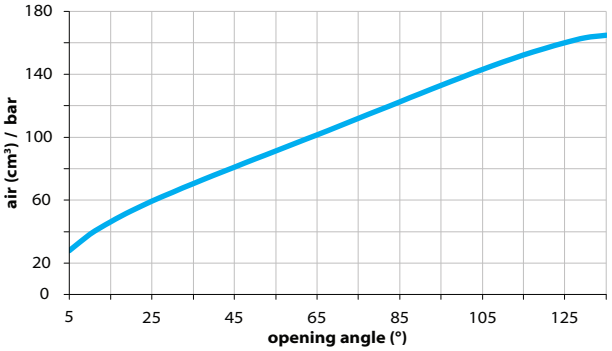

Clamping Arms

Arm Offset 0mm

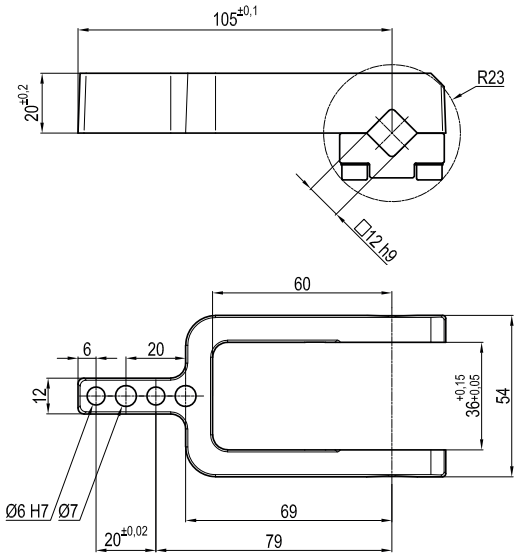

Arm Offset 10mm

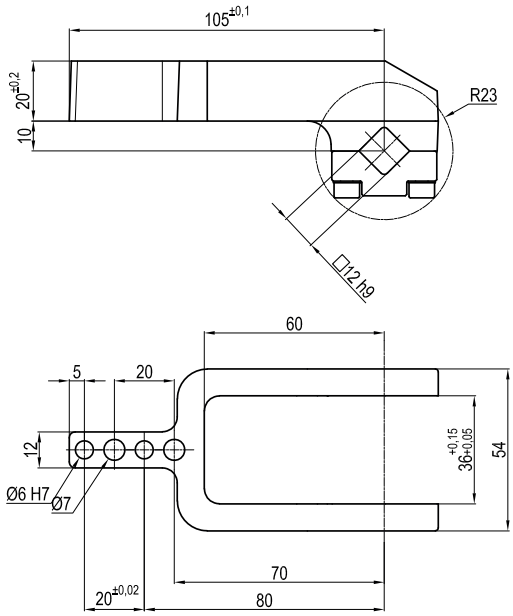

Arm Offset 25mm

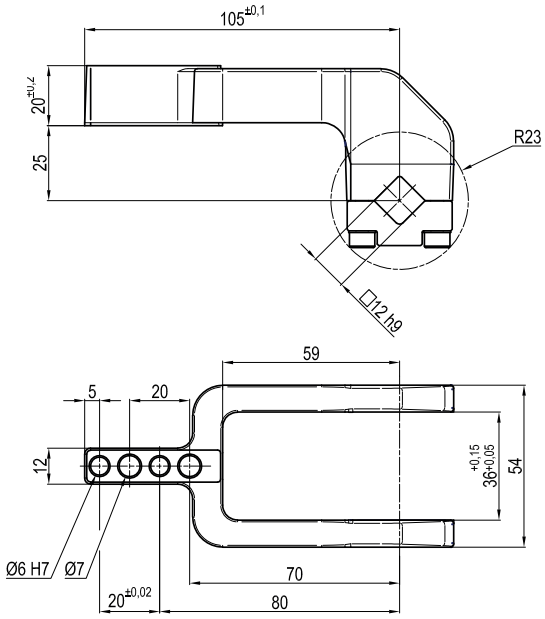

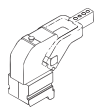

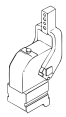

Armcode	Offset	Material	Arm style	Weight (Kg)	Opening angle (90°)	Opening angle (180°)
LKP32B	0	ALUMINIUM	CENTRAL	0,15	0÷105°	0÷105°
LKP32C	10	ALUMINIUM	CENTRAL	0,15	0÷105°	0÷105°
LKP32E	25	ALUMINIUM	CENTRAL	0,15	0÷105°	0÷105°

Sensors

Electronic (optical)

DF-K PNP M12
DF-J NPN M12
DF-Y PNP M12 White LED

Accessories

Handlever

UBF252532

Self holding system

UBK46P12

2

UNICLAMP

PNEUMATIC POWER CLAMPS

Ø40-80mm

UCBP40 2
UCIP40 5
UCBP50 8
UCBP63 11
UCBH63 14
UCBP80 17

Ø40-80mm with hand lever

UCBM40 20
UCBT40 23
UCIM40 26
UCBM50 29
UCBM63 32
UCBQ63 35
UCBM80 38

Ø40-63mm with double arm

UCDP40 41
UCDP63 44

NAAMS standard Ø50-80mm

UCNP50 47
UCNP63 50
UCNP80 53

NAAMS standard Ø50-80mm with hand lever

UCNM50 56
UCNM63 59
UCNM80 62

Manual power clamps Ø50-63mm

UCBL450 65
UCBL463 68

BLUECLAMP air saving

PNEUMATIC POWER CLAMPS AIR SAVING

Ø25-63mm
Air saving

UABP32	71
UABP40	74
UABP50	77
UABP63	80
UABP80	83

Ø32-63mm
Air saving with hand lever

UABM40	86
UABM50	89
UABM63	92
UABM80	95

NAAMS standard Ø40-63mm

UANP50	98
UANP63	101
UANP80	104

NAAMS standard Ø40-63mm
with hand lever

UANM50	109
UANM63	110
UANM80	113

UCBP 40

Pneumatic power clamps Ø40 mm

Pneumatic power clamps with compensation system, toggle-joint mechanism and stepless adjustable opening angle, typically used for handling and holding metal sheets in welding applications

- Lightweight aluminium construction ideal for mounting on grippers
- Compact dimensions
- Integrated compensation system up to 2 mm
- Version with hand lever available
- Fully optical electronic sensor or pneumatic sensor
- Fixing pattern on 4 sides
- Manual unlocking in case of air loss
- Self-holding system for open position available
- Clamping arm in aluminium or steel

CHARACTERISTICS

Operating temperature	**5° ÷ 45° C**
Min./Max. Operating pressure	**0,4 / 0,6 MPa**
Opening angle*	**0° ÷ 135°**
Bore Ø	**40 mm**
Holding moment	**600 Nm**
Clamping moment (0,5 MPa)	**170 Nm**
Weight (clamping arm not included)	**1,5 Kg**
Pneumatic supply ports	**G1/8 on both sides**
Sensor	**electronic (optical)**
Supply voltage	**10 ÷ 30 Vdc**
IP code	**IP65**

**The opening angle range may vary according to the arm position and style.*

COMPENSATION

LIGHTWEIGHT

IRREVERSIBLE

ANGLE ADJUSTMENT

OPTICAL SENSOR

COMPACT

CODIFICATION KEY

UC	B	P	40	**O**	**E**	**A**	**K**	0	
1	2	3	4	5	6	7	8	9	10

1 SERIES
UC = UNICLAMP Power clamps

2 STANDARD
B = European standard

3 VERSION
P = Pneumatic

4 SIZE
40 = Ø 40 mm

5 ARM POSITION

V = 90°

O = 180°

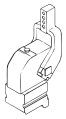

N = No arm

6 ARM STYLE
C = Central, 15 mm offset
D = Right, 15 mm offset
S = Left, 15 mm offset
E = Central, 45 mm offset
F = Right, 45 mm offset
L = Left, 45 mm offset
N = No arm
For other versions contact our Sales Dept.

7 ARM TYPE
A = Aluminium
S = Steel
N = No arm

8 SENSOR
N = No sensor (with protection plate)
K = Electronic sensor PNP, M12 (DF-K)
D = Pneumatic sensor (DF-UPNW)
J = Electronic sensor NPN, optical (DF-J)
Y = Electronic sensor PNP, M12 (DF-Y) white LED

9 PRODUCT REVISION
Assigned by UNIVER

10 ATEX
X = ATEX option
See ATEX Catalogue for types and versions

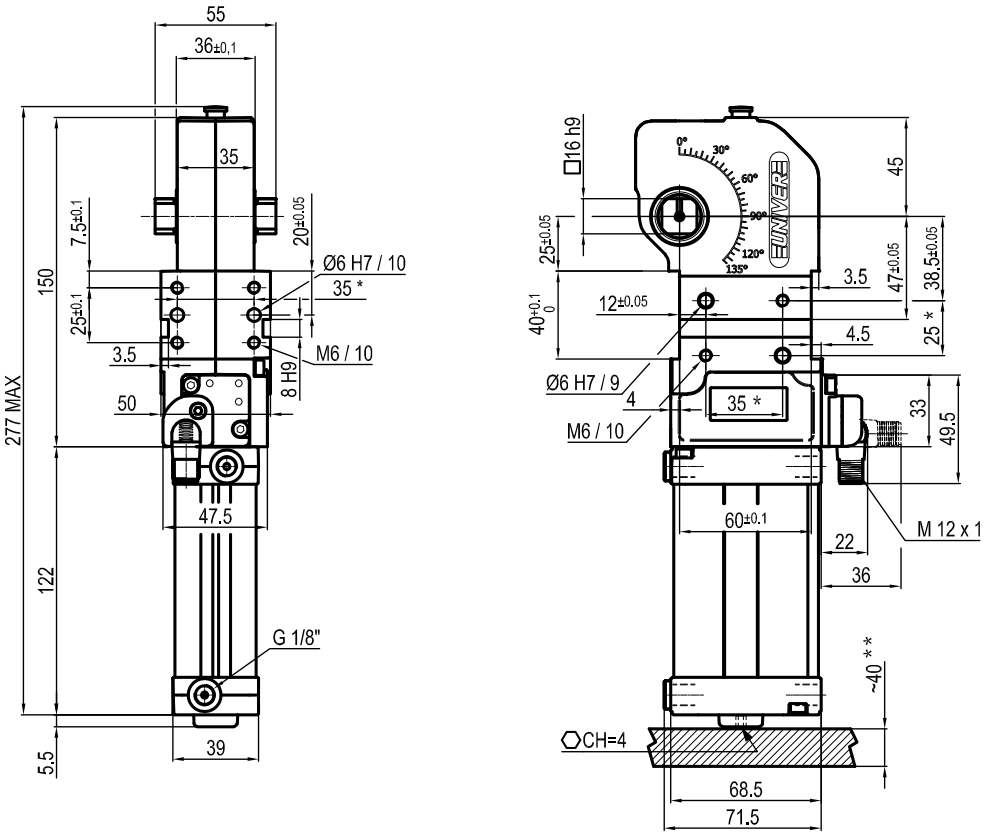

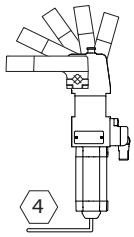

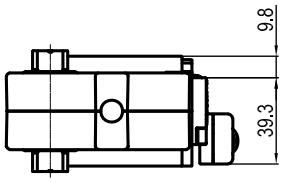

**TOLERANCE BETWEEN DOWELS ± 0,02 BETWEEN SCREW HOLES ± 0,1*
***AREA TO ACCESS ANGLE ADJUSTMENT*

Maximum Applicable Load

Pressure: 5 bar - 90° cycle time (Open - Close)

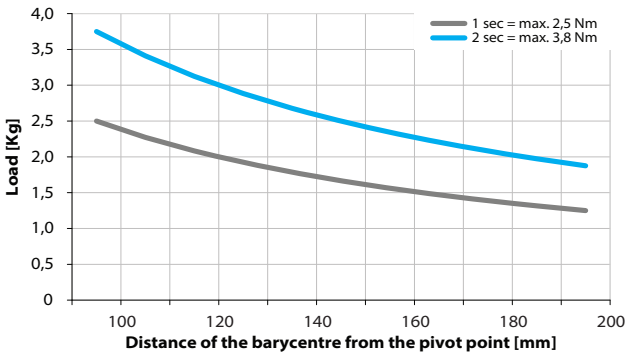

Air Consumption per Cycle

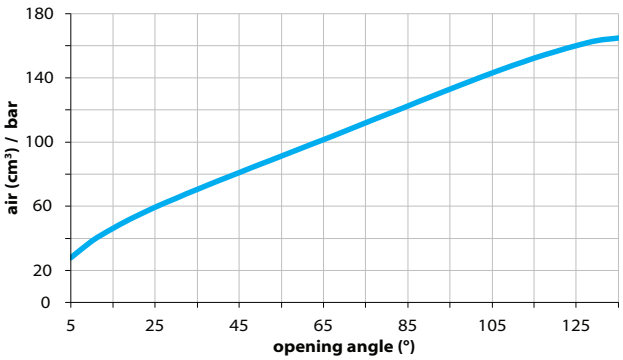

Clamping Arms

Arm Offset 15mm

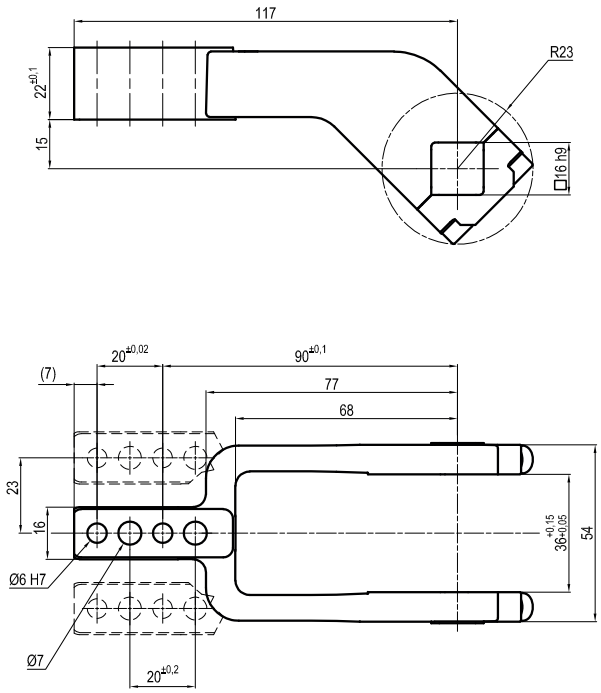

Arm Offset 45mm

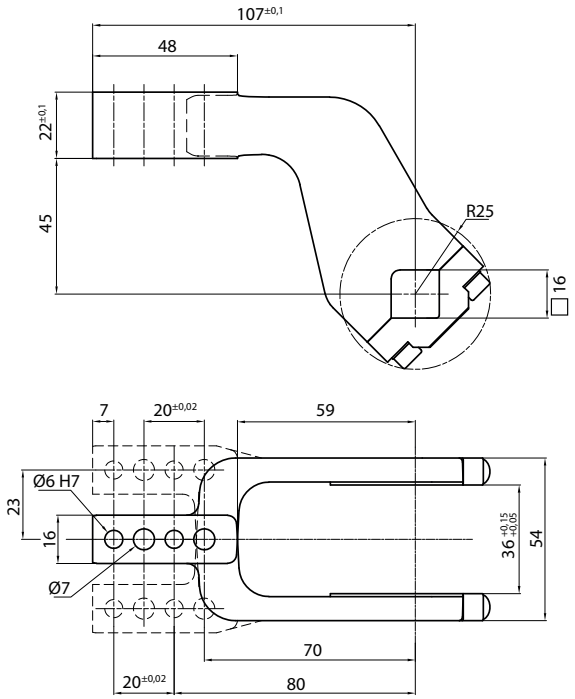

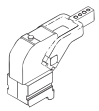

Armcode	Offset	Material	Arm style	Weight (Kg)	Opening angle (90°)	Opening angle (180°)
LKP01CST	15	ALUMINIUM	CENTRAL	0,2	0÷135°	0÷125°
LKP01DST	15	ALUMINIUM	RIGHT	0,2	0÷135°	0÷125°
LKP01SST	15	ALUMINIUM	LEFT	0,2	0÷135°	0÷125°
UP120151441S	15	STEEL	CENTRAL	0,4	0÷135°	0÷125°
UP120151442S	15	STEEL	RIGHT	0,4	0÷135°	0÷125°
UP120151443S	15	STEEL	LEFT	0,4	0÷135°	0÷125°
UKP01E	45	ALUMINIUM	CENTRAL	0,25	0÷125°	0÷135°
UKP01F	45	ALUMINIUM	RIGHT	0,25	0÷125°	0÷135°
UKP01L	45	ALUMINIUM	LEFT	0,25	0÷125°	0÷135°
UKP01ES	45	STEEL	CENTRAL	0,4	0÷125°	0÷135°
UKP01FS	45	STEEL	RIGHT	0,4	0÷125°	0÷135°
UKP01LS	45	STEEL	LEFT	0,4	0÷125°	0÷135°

Sensors

Electronic (optical)

DF-K PNP M12
DF-J NPN M12
DF-Y PNP M12 White LED

Pneumatic

DF-UPNW

Accessories

Self holding system

UBK46P16 For arm 15 offset
UBK46P16-45 For arm 45 offset

UCIP 40

Pneumatic power clamps Ø40 mm interchangeable with Ø50-63 mm

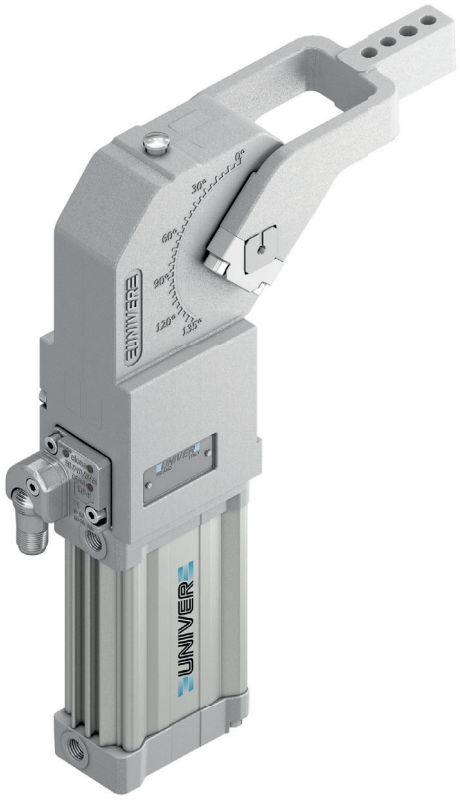

Pneumatic power clamps size Ø40 mm with fixing patterns interchangeable with size Ø50-63mm, compensation system, toggle-joint mechanism and stepless adjustable opening angle, typically used for handling and holding metal sheets in welding applications

- Lightweight aluminium construction
- Compact dimensions
- Integrated compensation system up to 2 mm
- Version with manual hand lever available
- Fully optical electronic sensor or pneumatic sensor
- Fixing pattern on the front side
- Manual unlocking in case of air loss
- Self-holding system for open position available
- Clamping arm in aluminium

CHARACTERISTICS

Operating temperature	**5° ÷ 45° C**
Min./Max. Operating pressure	**0,4 / 0,6 MPa**
Opening angle*	**0° ÷ 135°**
Bore Ø	**40 mm**
Holding moment	**600 Nm**
Clamping moment (0,5 MPa)	**170 Nm**
Weight (clamping arm not included)	**1,6 Kg**
Pneumatic supply ports	**G1/8 on both sides**
Sensor	**electronic (optical)**
Supply voltage	**10 ÷ 30 Vdc**
IP code	**IP65**

**The opening angle range may vary according to the arm position and style.*

COMPENSATION

LIGHTWEIGHT

IRREVERSIBLE

ANGLE ADJUSTMENT

OPTICAL SENSOR

COMPACT

CODIFICATION KEY

UC	I	P	40	O	E	A	N	K	0	
1	2	3	4	5	6	7	8	9	10	11

1 SERIES
UC = UNICLAMP Power clamps

2 STANDARD
I = Interchangeable with size Ø50-63 mm

3 VERSION
P = Pneumatic

4 SIZE
40 = Ø 40 mm

5 ARM POSITION

V = 90°

O = 180°

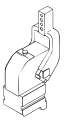

N = No arm

6 ARM STYLE
C = Central, 15 mm offset
D = Right, 15 mm offset
S = Left, 15 mm offset
E = Central, 45 mm offset
F = Right, 45 mm offset
L = Left, 45 mm offset
N = No arm
For other versions contact our Sales Dept.

7 ARM TYPE
A = Aluminium
S = Steel
N = No arm

8 OPTION
N = Standard
A = Preset for self-holding system

9 SENSOR
N = No sensor (with protection plate)
K = Electronic sensor PNP, M12 (DF-K)
D = Pneumatic sensor (DF-UPNW)
J = Electronic sensor NPN, optical (DF-J)
Y = Electronic sensor PNP, M12 (DF-Y) white LED

10 PRODUCT REVISION
Assigned by UNIVER

11 ATEX
X = ATEX option
See ATEX Catalogue for types and versions

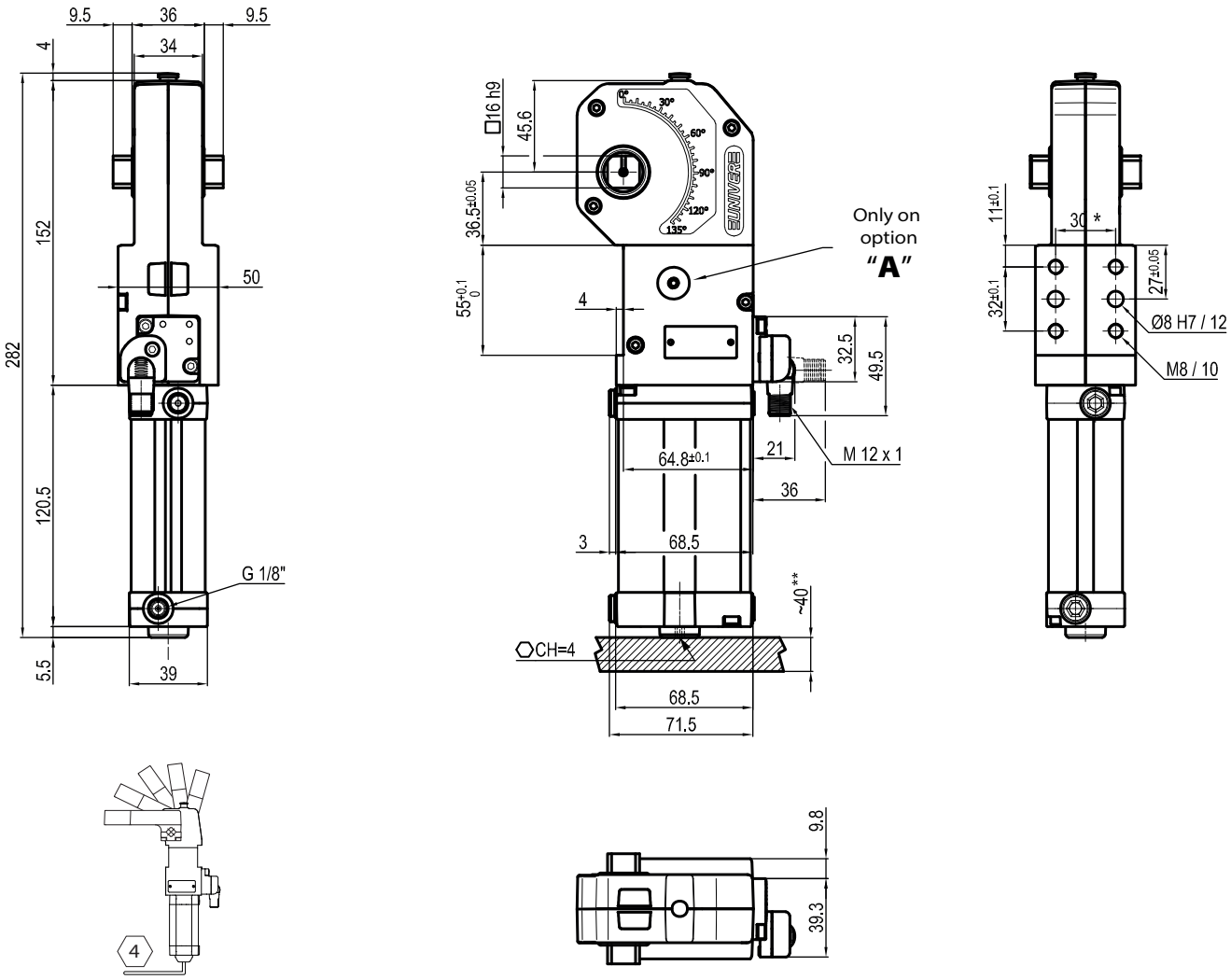

**TOLERANCE BETWEEN DOWELS ± 0,02 BETWEEN SCREW HOLES ± 0,1*
***AREA TO ACCESS ANGLE ADJUSTMENT*

Maximum Applicable Load

Pressure: 5 bar - 90° cycle time (Open - Close)

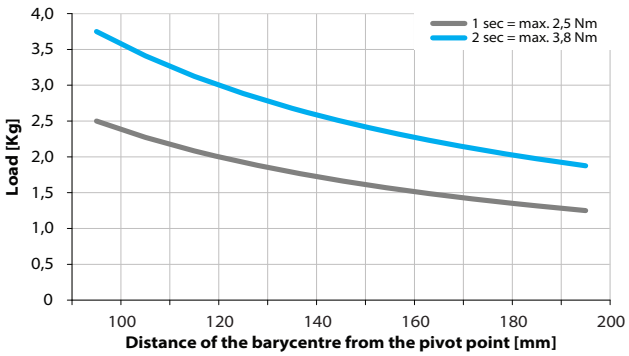

Air Consumption per Cycle

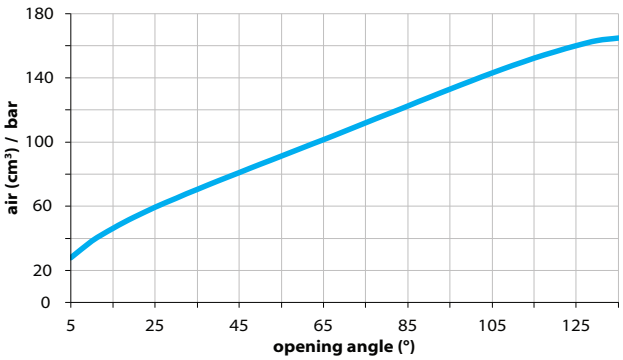

Clamping Arms

Arm Offset 15mm

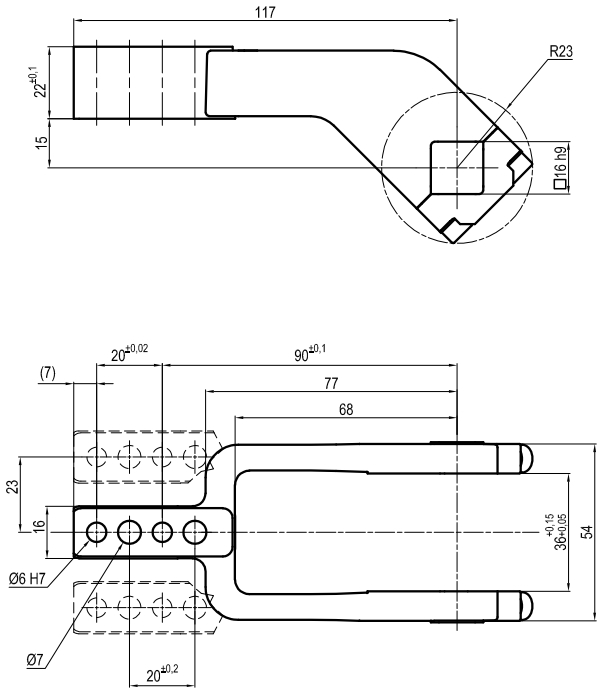

Arm Offset 45mm

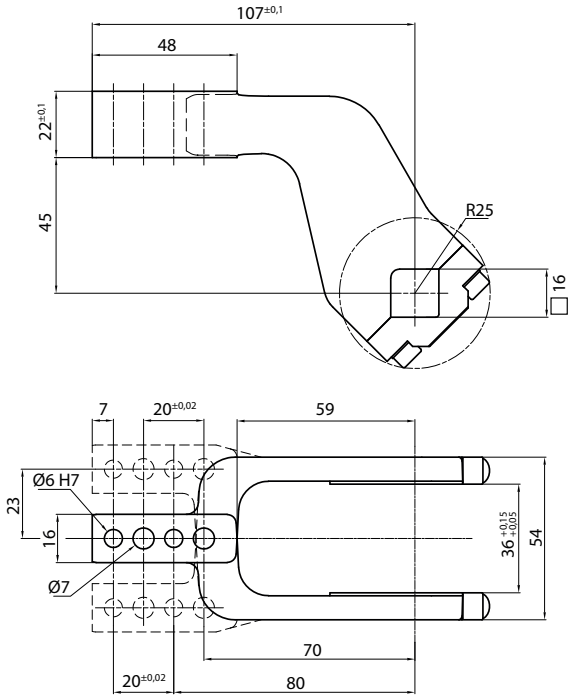

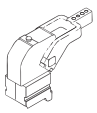

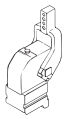

Armcode	Offset	Material	Arm style	Weight (Kg)	Opening angle (90°)	Opening angle (180°)
LKP01CST	15	ALUMINIUM	CENTRAL	0,2	0÷135°	0÷120°
LKP01DST	15	ALUMINIUM	RIGHT	0,2	0÷135°	0÷120°
LKP01SST	15	ALUMINIUM	LEFT	0,2	0÷135°	0÷120°
IKP40E	45	ALUMINIUM	CENTRAL	0,3	0÷135°	0÷135°
IKP40F	45	ALUMINIUM	RIGHT	0,3	0÷135°	0÷135°
IKP40L	45	ALUMINIUM	LEFT	0,3	0÷135°	0÷135°

Sensors

Electronic (optical)

DF-K PNP M12
DF-J NPN M12
DF-Y PNP M12 White LED

Pneumatic

DF-UPNW

Accessories

Self holding system

UBK46P16 For arm 15 offset
UBK46P16-45 For arm 45 offset

UCBP 50

Pneumatic power clamps Ø50 mm

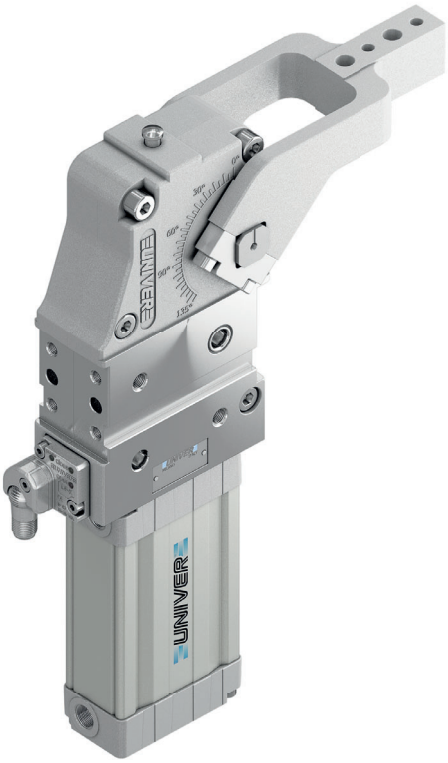

Pneumatic power clamps with compensation system, toggle-joint mechanism and stepless adjustable opening angle, typically used for handling and holding metal sheets in welding applications

- Lightweight aluminium construction
- Compact dimensions
- Integrated compensation system up to 1,7 mm
- Version with hand lever available
- Fully optical electronic sensor or pneumatic sensor
- Fixing pattern on 4 sides
- Manual unlocking in case of air loss
- Self-holding system for open position available
- Clamping arm in aluminium or steel

CHARACTERISTICS

Operating temperature	**5° ÷ 45° C**
Min./Max. Operating pressure	**0,4 / 0,6 MPa**
Opening angle*	**0° ÷ 135°**
Bore Ø	**50 mm**
Holding moment	**1250 Nm**
Clamping moment (0,5 MPa)	**280 Nm**
Weight (clamping arm not included)	**2,5 Kg**
Pneumatic supply ports	**G1/4 on both sides**
Sensor	**electronic (optical)**
Supply voltage	**10 ÷ 30 Vdc**
IP code	**IP65**

**The opening angle range may vary according to the arm position and style.*

COMPENSATION

LIGHTWEIGHT

IRREVERSIBLE

ANGLE ADJUSTMENT

OPTICAL SENSOR

COMPACT

CODIFICATION KEY

UC	B	P	50	**O**	**E**	**A**	**K**	0	
1	2	3	4	5	6	7	8	9	10

1 SERIES
UC = UNICLAMP Power clamps

2 STANDARD
B = European standard

3 VERSION
P = Pneumatic

4 SIZE
50 = Ø 50 mm

5 ARM POSITION

V = 90°

O = 180°

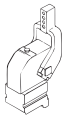

N = No arm

6 ARM STYLE
C = Central, 15 mm offset
D = Right, 15 mm offset
S = Left, 15 mm offset
E = Central, 45 mm offset
F = Right, 45 mm offset
L = Left, 45 mm offset
N = No arm
For other versions contact our Sales Dept.

7 ARM TYPE
A = Aluminium
S = Steel
N = No arm

8 SENSOR
N = No sensor (with protection plate)
K = Electronic sensor PNP, M12 (DF-K)
D = Pneumatic sensor (DF-UPNW)
J = Electronic sensor NPN, optical (DF-J)
Y = Electronic sensor PNP, M12 (DF-Y) white LED

9 PRODUCT REVISION
Assigned by UNIVER

10 ATEX
X = ATEX option
See ATEX Catalogue for types and versions

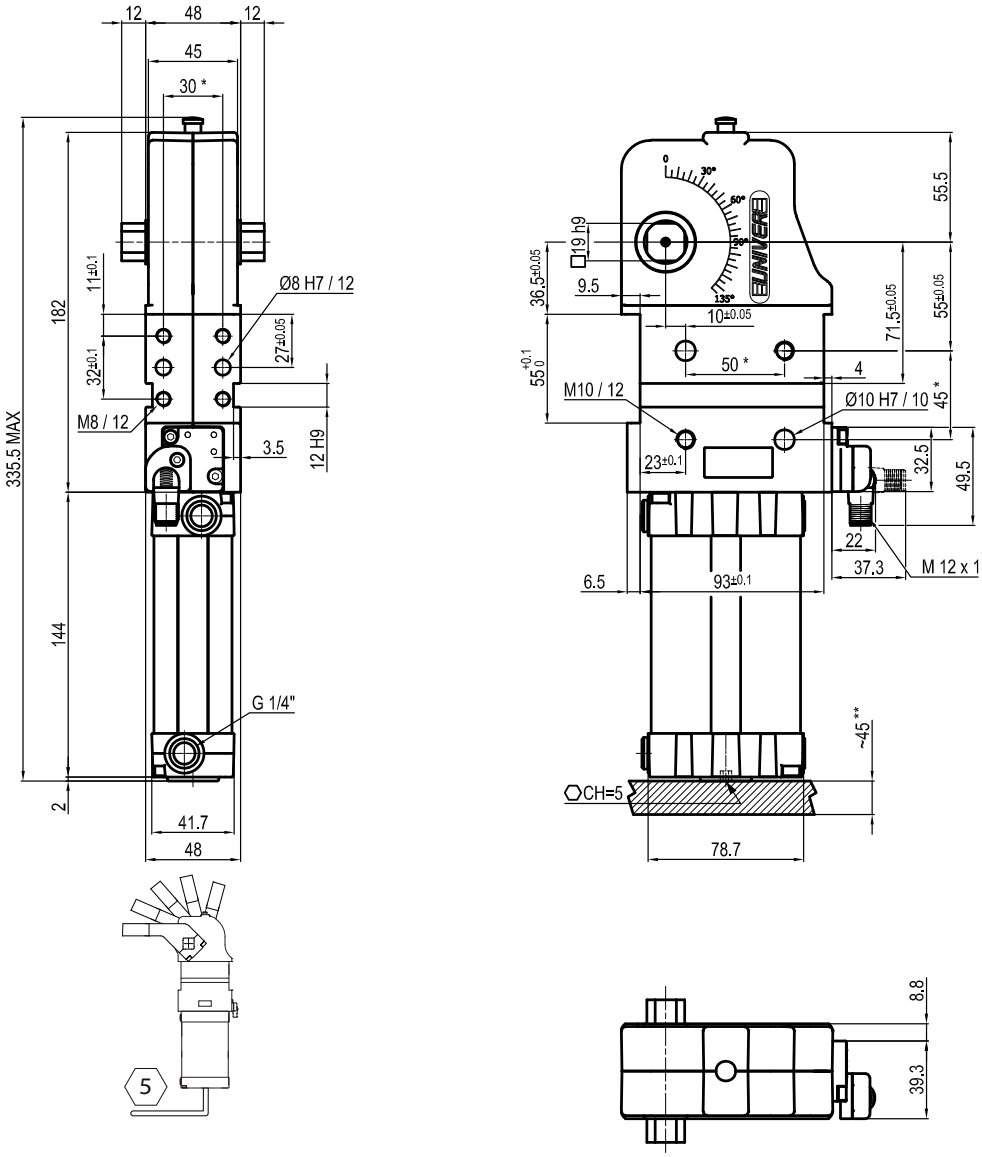

**TOLERANCE BETWEEN DOWELS ± 0,02 BETWEEN SCREW HOLES ± 0,1*
***AREA TO ACCESS ANGLE ADJUSTMENT*

Maximum Applicable Load

Pressure: 5 bar - 90° cycle time (Open - Close)

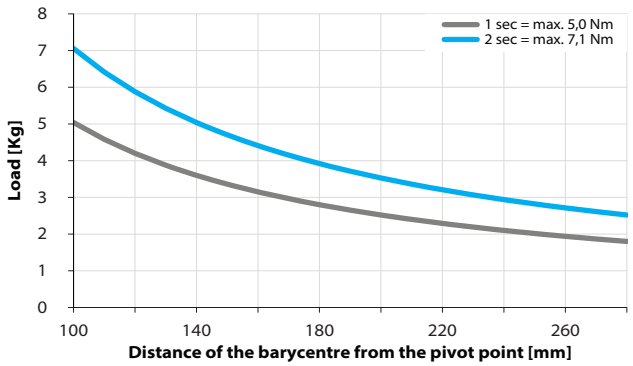

Air Consumption per Cycle

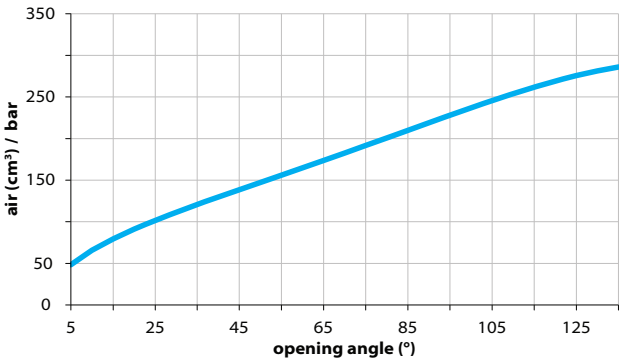

Clamping Arms

Arm Offset 15mm

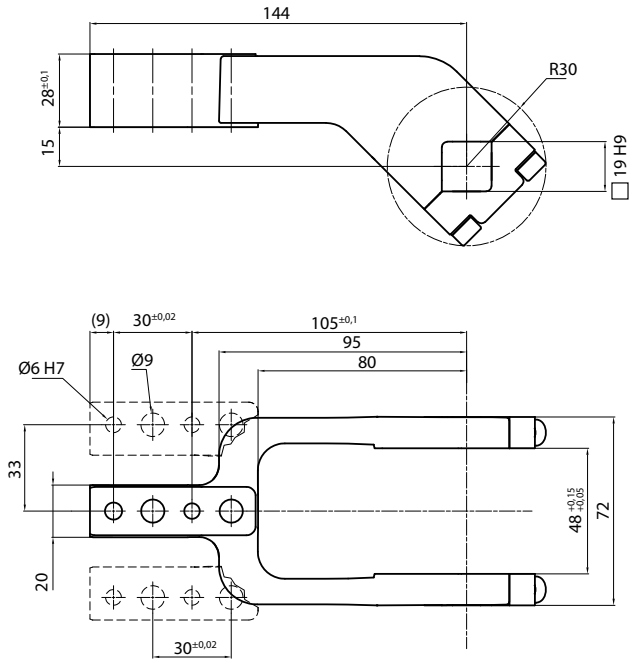

Arm Offset 45mm

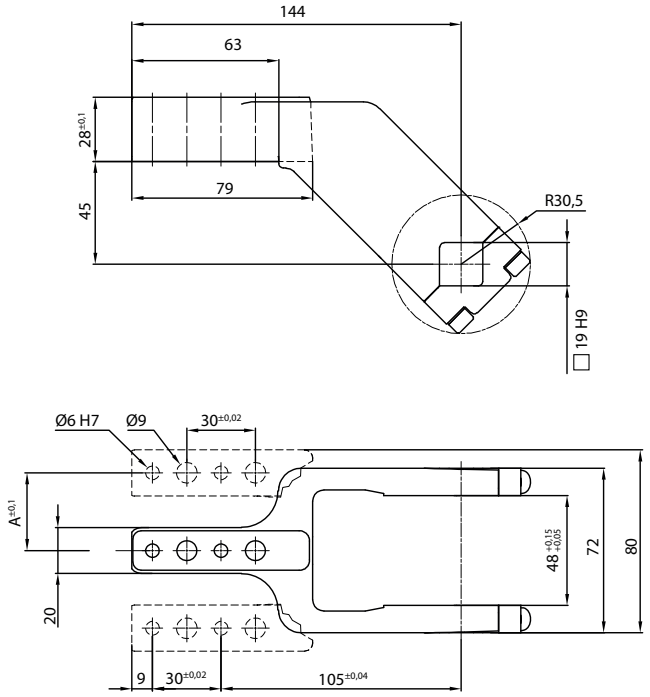

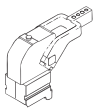

Armcode	Offset	Material	Arm style	Weight (Kg)	Opening angle (90°)	Opening angle (180°)
LKP00CL	15	ALUMINIUM	CENTRAL	0,4	0÷135°	0÷105°
LKP00DL	15	ALUMINIUM	RIGHT	0,4	0÷135°	0÷105°
LKP00SL	15	ALUMINIUM	LEFT	0,4	0÷135°	0÷105°
UP210151441G	15	STEEL	CENTRAL	0,8	0÷135°	0÷105°
UP210151442G	15	STEEL	RIGHT	0,8	0÷135°	0÷105°
UP210151443G	15	STEEL	LEFT	0,8	0÷135°	0÷105°
UKP5063E	45	ALUMINIUM	CENTRAL	0,45	0÷135°	0÷135°
UKP50F	45	ALUMINIUM	RIGHT	0,45	0÷135°	0÷135°
UKP50L	45	ALUMINIUM	LEFT	0,45	0÷135°	0÷135°
UKP5063ES	45	STEEL	CENTRAL	1,16	0÷135°	0÷135°
UKP50FS	45	STEEL	RIGHT	1,16	0÷135°	0÷135°
UKP50LS	45	STEEL	LEFT	1,16	0÷135°	0÷135°

Sensors

Electronic (optical)

DF-K PNP M12
DF-J NPN M12
DF-Y PNP M12 White LED

Pneumatic

DF-UPNW

Accessories

Self holding system

UBK46P19

UCBP 63

Pneumatic power clamps Ø63 mm

Pneumatic power clamps with compensation system, toggle-joint mechanism and stepless adjustable opening angle, typically used for handling and holding metal sheets in welding applications

- Lightweight aluminium construction
- Compact dimensions
- Integrated compensation system up to 2,7 mm
- Version with hand lever available
- Fully optical electronic sensor or pneumatic sensor
- Fixing pattern on 4 sides
- Manual unlocking in case of air loss
- Self-holding system for open position available
- Clamping arm in aluminium or steel

CHARACTERISTICS

Operating temperature	**5° ÷ 45° C**
Min./Max. Operating pressure	**0,4 / 0,6 MPa**
Opening angle*	**0° ÷ 135°**
Bore Ø	**63 mm**
Holding moment	**1750 Nm**
Clamping moment (0,5 MPa)	**420 Nm**
Weight (clamping arm not included)	**2,9 Kg**
Pneumatic supply ports	**G1/4 on both sides**
Sensor	**electronic (optical)**
Supply voltage	**10 ÷ 30 Vdc**
IP code	**IP65**

**The opening angle range may vary according to the arm position and style.*

COMPENSATION

LIGHTWEIGHT

IRREVERSIBLE

ANGLE ADJUSTMENT

OPTICAL SENSOR

COMPACT

CODIFICATION KEY

UC	B	P	63	**O**	**E**	**A**	**K**	0	
1	2	3	4	5	6	7	8	9	10

1 SERIES
UC = UNICLAMP Power clamps

2 STANDARD
B = European standard

3 VERSION
P = Pneumatic

4 SIZE
63 = Ø63 mm

5 ARM POSITION

V = 90°

O = 180°

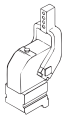

N = No arm

6 ARM STYLE
C = Central, 15 mm offset
D = Right, 15 mm offset
S = Left, 15 mm offset
E = Central, 45 mm offset
F = Right, 45 mm offset
L = Left, 45 mm offset
N = No arm
For other versions contact our Sales Dept.

7 ARM TYPE
A = Aluminium
S = Steel
N = No arm

8 SENSOR
N = No sensor (with protection plate)
K = Electronic sensor PNP, M12 (DF-K)
D = Pneumatic sensor (DF-UPNW)
J = Electronic sensor NPN, optical (DF-J)
Y = Electronic sensor PNP, M12 (DF-Y) white LED

9 PRODUCT REVISION
Assigned by UNIVER

10 ATEX
X = ATEX option
See ATEX Catalogue for types and versions

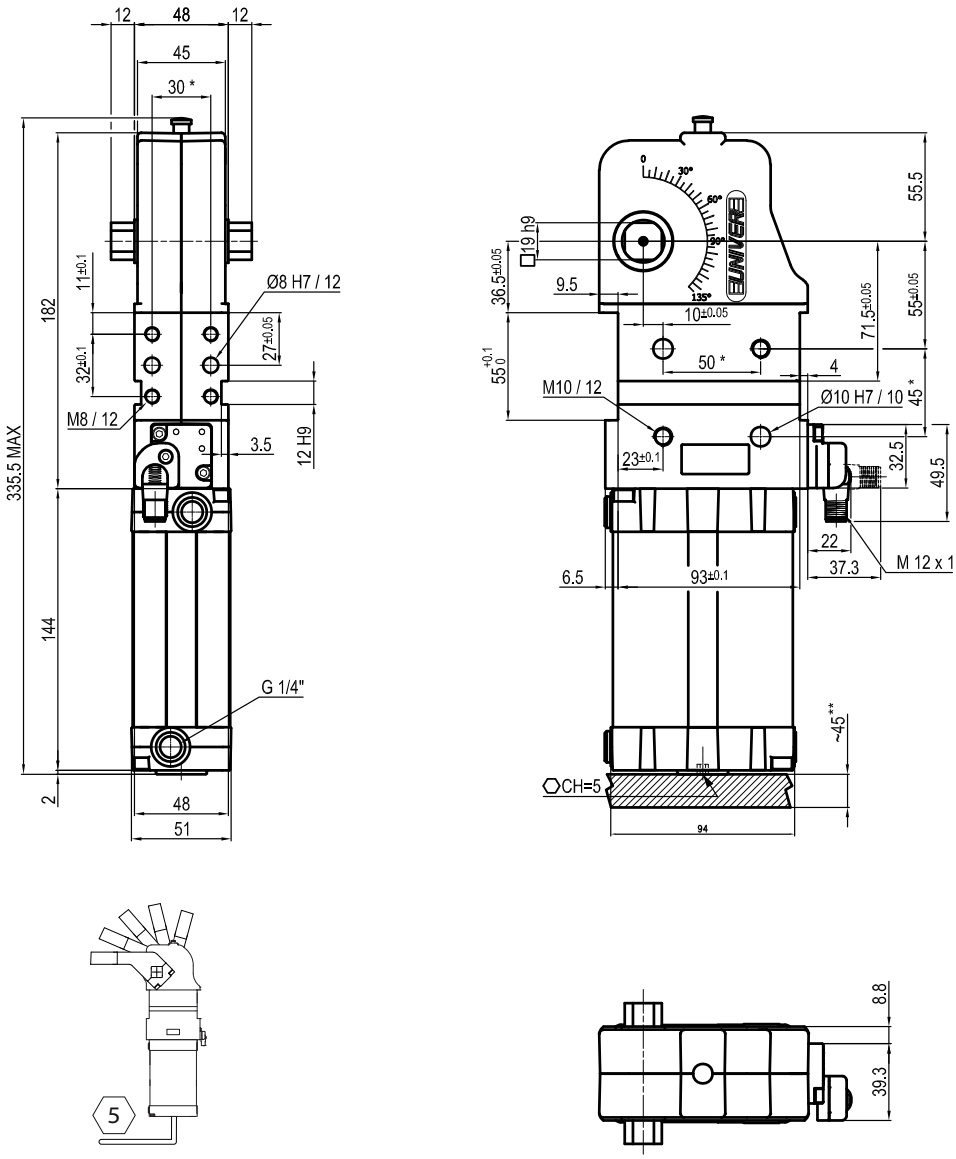

** TOLERANCE BETWEEN DOWELS ± 0,02, BETWEEN SCREW HOLES ± 0,1*
***AREA TO ACCESS ANGLE ADJUSTMENT*

Maximum Applicable Load

Pressure: 5 bar - 90° cycle time (Open - Close)

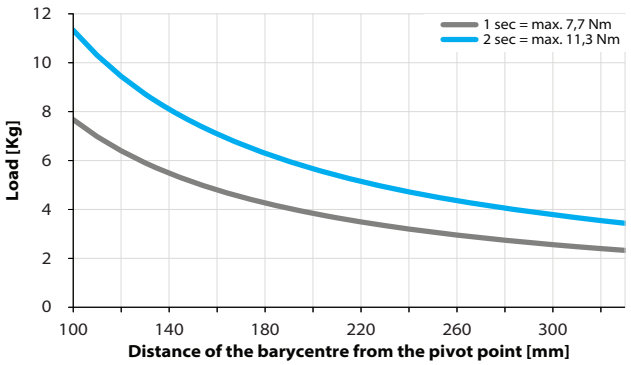

Air Consumption per Cycle

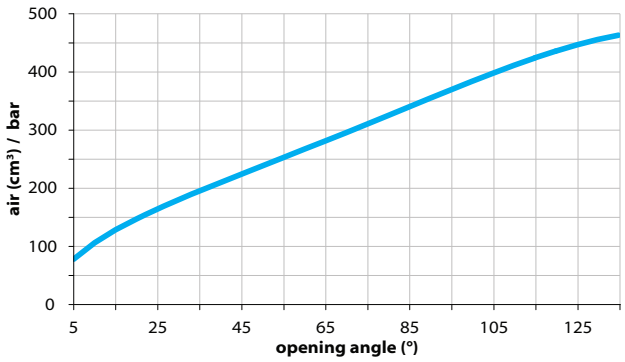

Clamping Arms

Arm Offset 15mm

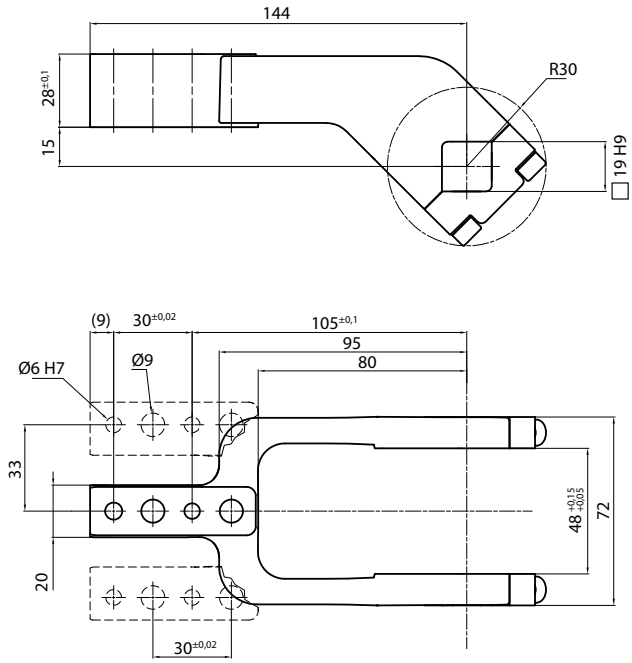

Arm Offset 45mm

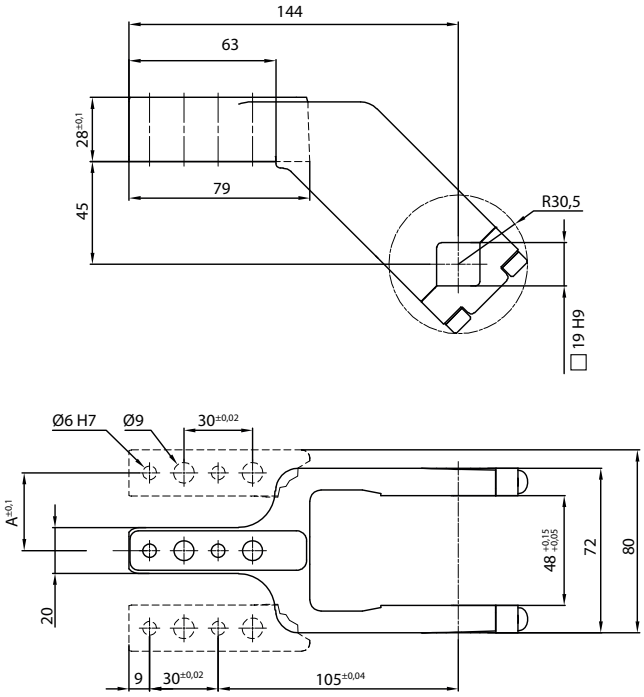

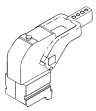

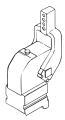

Armcode	Offset	Material	Arm style	Weight (Kg)	Opening angle (90°)	Opening angle (180°)
LKP00CL	15	ALUMINIUM	CENTRAL	0,4	0÷135°	0÷105°
LKP00DL	15	ALUMINIUM	RIGHT	0,4	0÷135°	0÷105°
LKP00SL	15	ALUMINIUM	LEFT	0,4	0÷135°	0÷105°
UP210151441G	15	STEEL	CENTRAL	0,8	0÷135°	0÷105°
UP210151442G	15	STEEL	RIGHT	0,8	0÷135°	0÷105°
UP210151443G	15	STEEL	LEFT	0,8	0÷135°	0÷105°
UKP5063E	45	ALUMINIUM	CENTRAL	0,45	0÷135°	0÷135°
UKP63F	45	ALUMINIUM	RIGHT	0,45	0÷135°	0÷135°
UKP63L	45	ALUMINIUM	LEFT	0,45	0÷135°	0÷135°
UKP5063ES	45	STEEL	CENTRAL	1,16	0÷135°	0÷135°
UKP63FS	45	STEEL	RIGHT	1,16	0÷135°	0÷135°
UKP63LS	45	STEEL	LEFT	1,16	0÷135°	0÷135°

Sensors

Electronic (optical)

DF-K PNP M12
DF-J NPN M12
DF-Y PNP M12 White LED

Pneumatic

DF-UPNW

Accessories

Self holding system

UBK46P19

UCBH 63

Pneumatic power clamps Ø63 mm, □22 mm

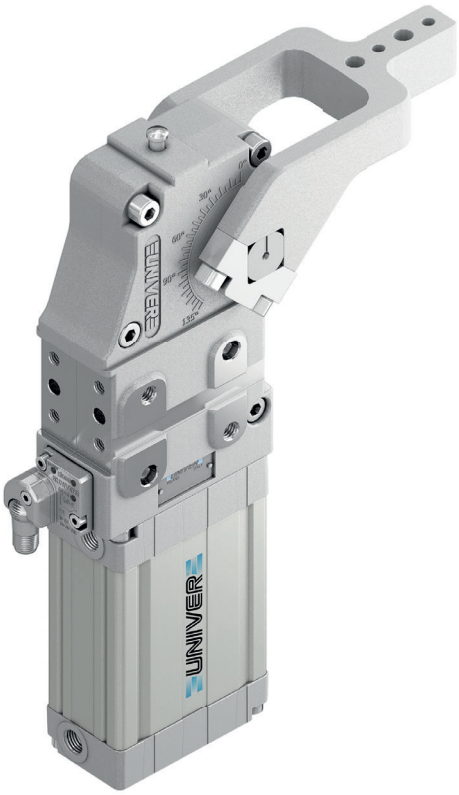

Pneumatic power clamps with compensation system, toggle-joint mechanism and stepless adjustable opening angle, typically used for handling and holding metal sheets in welding applications

- Lightweight aluminium construction
- Compact dimensions
- Integrated compensation system up to 2,7 mm
- Version with manual hand lever available
- Fully optical electronic sensor or pneumatic sensor
- Fixing pattern on 4 sides
- Manual unlocking in case of air loss
- Self-holding system for open position available
- Clamping arm in aluminium or steel

CHARACTERISTICS

Operating temperature	**5° ÷ 45° C**
Min./Max. Operating pressure	**0,4 / 0,6 MPa**
Opening angle*	**0° ÷ 135°**
Bore Ø	**63 mm**
Holding moment	**1750 Nm**
Clamping moment (0,5 MPa)	**420 Nm**
Weight (clamping arm not included)	**3,2 Kg**
Pneumatic supply ports	**G1/4 on both sides**
Sensor	**electronic (optical)**
Supply voltage	**10 ÷ 30 Vdc**
IP code	**IP65**

**The opening angle range may vary according to the arm position and style.*

COMPENSATION

LIGHTWEIGHT

IRREVERSIBLE

ANGLE ADJUSTMENT

OPTICAL SENSOR

COMPACT

CODIFICATION KEY

UC	B	H	63	O	E	A	K	0	
1	2	3	4	5	6	7	8	9	10

1 SERIES
UC = UNICLAMP Power clamps

2 STANDARD
B = European standard

3 VERSION
H = Pneumatic □22 mm

4 SIZE
63 = Ø63 mm

5 ARM POSITION

V = 90°

O = 180°

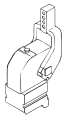

N = No arm

6 ARM STYLE
C = Central, 15 mm offset
D = Right, 15 mm offset
S = Left, 15 mm offset
E = Central, 45 mm offset
F = Right, 45 mm offset
L = Left, 45 mm offset
N = No arm
For other versions contact our Sales Dept.

7 ARM TYPE
A = Aluminium
S = Steel
N = No arm

8 SENSOR
N = No sensor (with protection plate)
K = Electronic sensor PNP, M12 (DF-K)
D = Pneumatic sensor (DF-UPNW)
J = Electronic sensor NPN, optical (DF-J)
Y = Electronic sensor PNP, M12 (DF-Y) white LED

9 PRODUCT REVISION
Assigned by UNIVER

10 ATEX
X = ATEX option
See ATEX Catalogue for types and versions

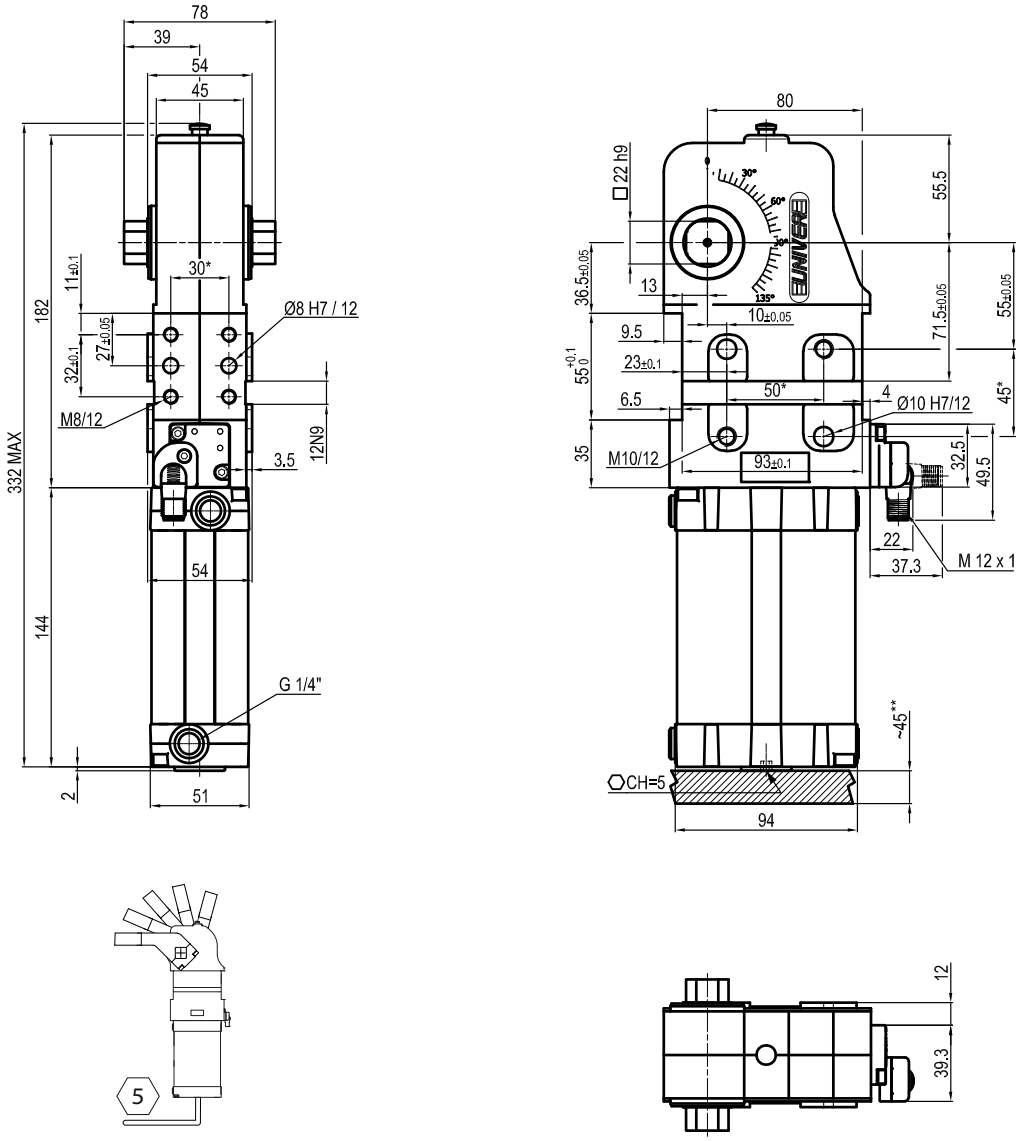

** TOLERANCE BETWEEN DOWELS ± 0,02, BETWEEN SCREW HOLES ± 0,1*
***AREA TO ACCESS ANGLE ADJUSTMENT*

Maximum Applicable Load

Pressure: 5 bar - 90° cycle time (Open - Close)

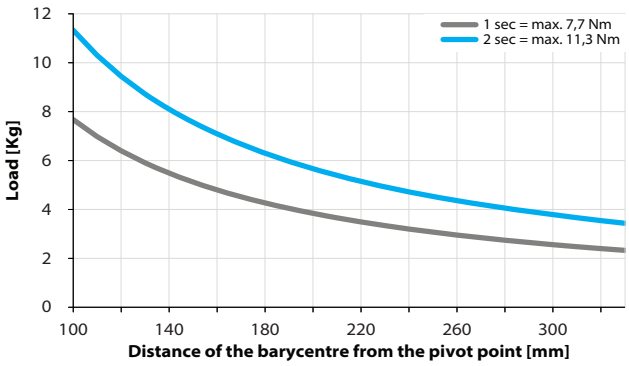

Air Consumption per Cycle

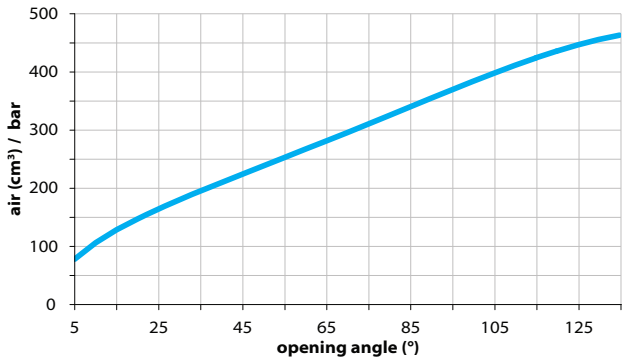

Clamping Arms

Arm Offset 15mm

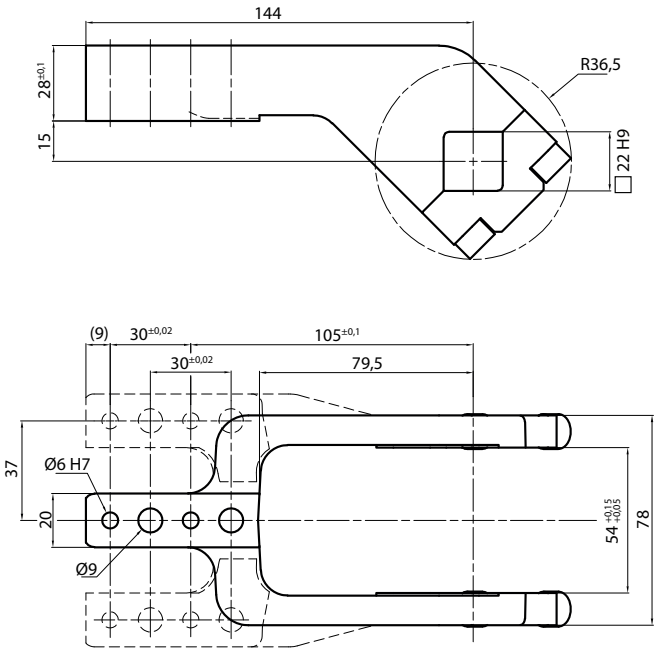

Arm Offset 45mm

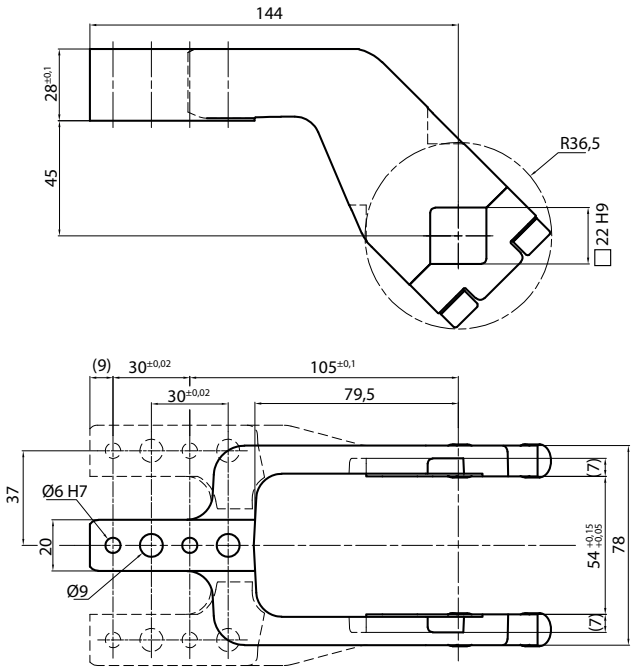

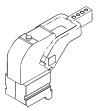

Armcode	Offset	Material	Arm style	Weight (Kg)	Opening angle (90°)	Opening angle (180°)
UP310151441A	15	ALUMINIUM	CENTRAL	0,3	0÷135°	0÷110°
UP310151442A	15	ALUMINIUM	RIGHT	0,3	0÷135°	0÷110°
UP310151443A	15	ALUMINIUM	LEFT	0,3	0÷135°	0÷110°
UP310151441S	15	STEEL	CENTRAL	1,2	0÷135°	0÷110°
UP310151442S	15	STEEL	RIGHT	1,2	0÷135°	0÷110°
UP310151443S	15	STEEL	LEFT	1,2	0÷135°	0÷110°
UP310451441A	45	ALUMINIUM	CENTRAL	0,3	0÷135°	0÷135°
UP310451442A	45	ALUMINIUM	RIGHT	0,3	0÷135°	0÷135°
UP310451443A	45	ALUMINIUM	LEFT	0,3	0÷135°	0÷135°
UP310451441S	45	STEEL	CENTRAL	1,4	0÷135°	0÷135°
UP310451442S	45	STEEL	RIGHT	1,4	0÷135°	0÷135°
UP310451443S	45	STEEL	LEFT	1,4	0÷135°	0÷135°

Sensors

Electronic (optical)

DF-K PNP M12
DF-J NPN M12
DF-Y PNP M12 White LED

Pneumatic

DF-UPNW

Accessories

Self holding system

UBK46P22

UCBP 80

Pneumatic power clamps Ø80 mm

Pneumatic power clamps with compensation system, toggle-joint mechanism and stepless adjustable opening angle, typically used for handling and holding metal sheets in welding applications

- Lightweight aluminium construction
- Integrated compensation system up to 2,9 mm
- Version with manual hand lever available
- Fully optical electronic sensor or pneumatic sensor
- Fixing pattern on 4 sides
- Manual unlocking in case of air loss
- Self-holding system for open position available
- Clamping arm in aluminium or steel

CHARACTERISTICS

Operating temperature	**5° ÷ 45° C**
Min./Max. Operating pressure	**0,4 / 0,6 MPa**
Opening angle*	**0° ÷ 135°**
Bore Ø	**80 mm**
Holding moment	**4000 Nm**
Clamping moment (0,5 MPa)	**1100 Nm**
Weight (clamping arm not included)	**8,6 Kg**
Pneumatic supply ports	**G1/4 on both sides**
Sensor	**electronic (optical)**
Supply voltage	**10 ÷ 30 Vdc**
IP code	**IP65**

**The opening angle range may vary according to the arm position and style.*

COMPENSATION

LIGHTWEIGHT

IRREVERSIBLE

ANGLE ADJUSTMENT

OPTICAL SENSOR

CODIFICATION KEY

UC	B	P	80	**O**	**E**	**A**	**K**	0	
1	2	3	4	5	6	7	8	9	10

1 SERIES
UC = UNICLAMP Power clamps

2 STANDARD
B = European standard

3 VERSION
P = Pneumatic

4 SIZE
80 = Ø80 mm

5 ARM POSITION

V = 90°

O = 180°

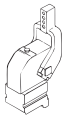

N = No arm

6 ARM STYLE
C = Central, 20 mm offset
D = Right, 20 mm offset
S = Left, 20 mm offset
E = Central, 45 mm offset
F = Right, 45 mm offset
L = Left, 45 mm offset
N = No arm
For other versions contact our Sales Dept.

7 ARM TYPE
A = Aluminium
S = Steel
N = No arm

8 SENSOR
N = No sensor (with protection plate)
K = Electronic sensor PNP, M12 (DF-K)
D = Pneumatic sensor (DF-UPNW80)
J = Electronic sensor NPN, optical (DF-J)
Y = Electronic sensor PNP, M12 (DF-Y) white LED

9 PRODUCT REVISION
Assigned by UNIVER

10 ATEX
X = ATEX option

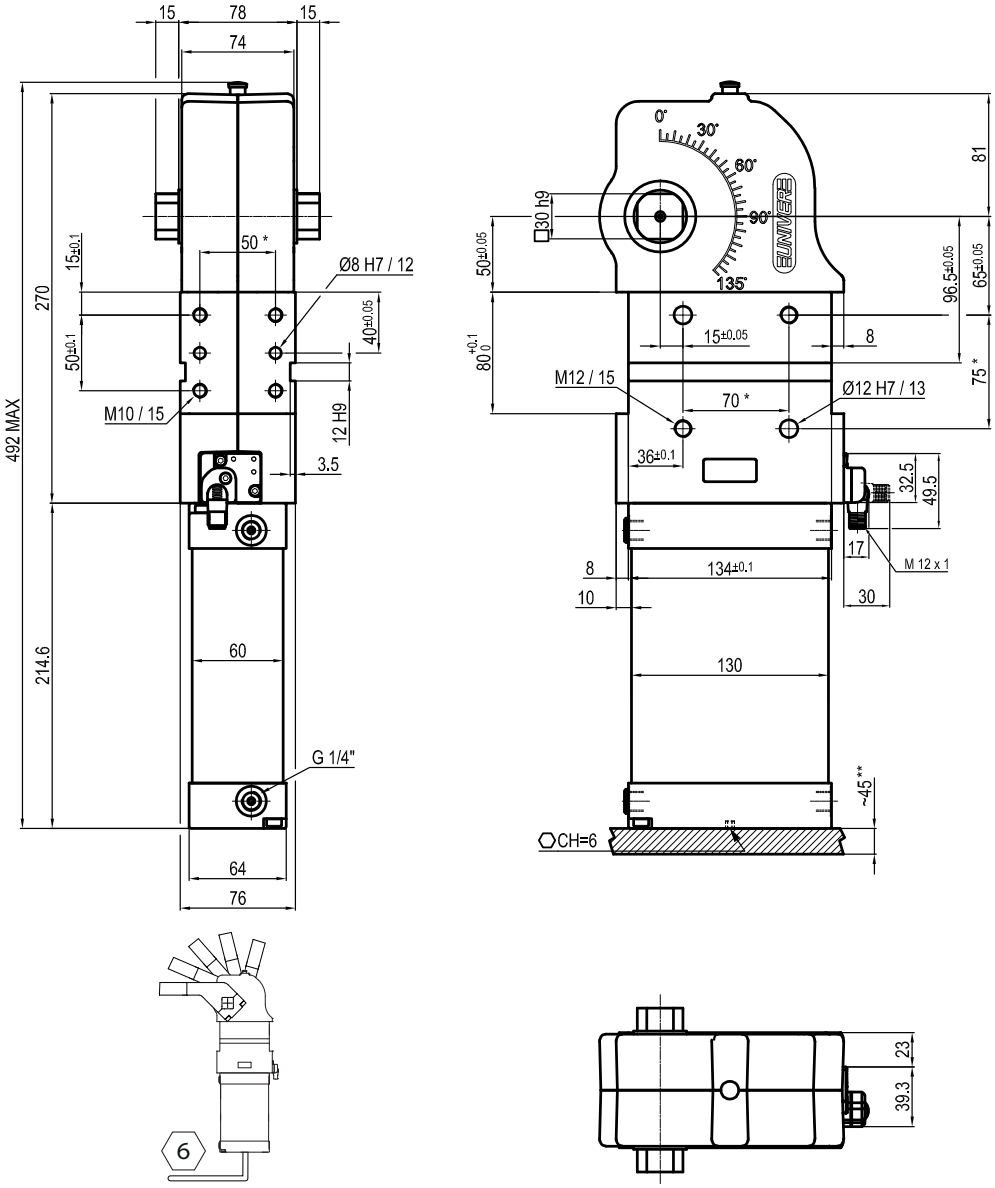

** TOLERANCE BETWEEN DOWELS ± 0,02, BETWEEN SCREW HOLES ± 0,1*
***AREA TO ACCESS ANGLE ADJUSTMENT*

Maximum Applicable Load

Pressure: 5 bar - 90° cycle time (Open - Close)

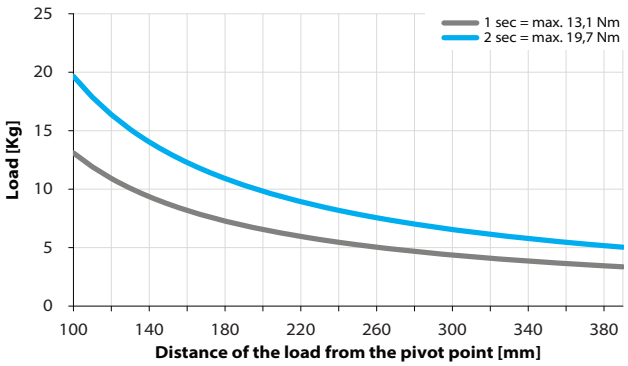

Air Consumption per Cycle

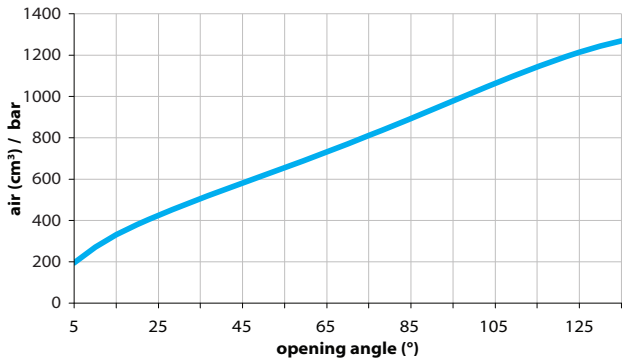

Clamping Arms

Arm Offset 20mm

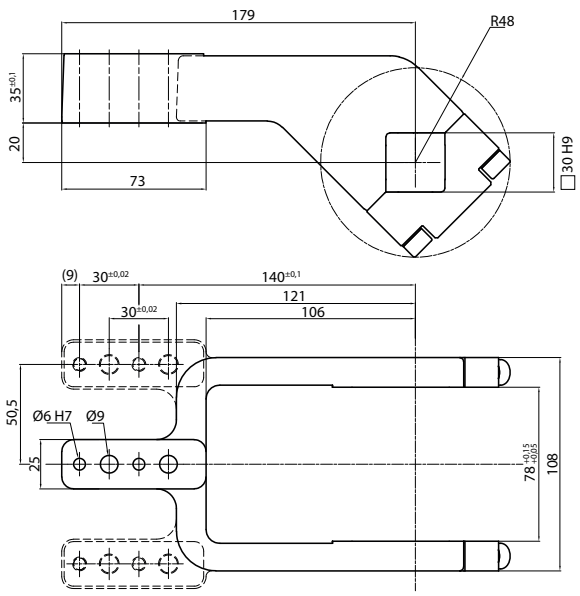

Arm Offset 45mm

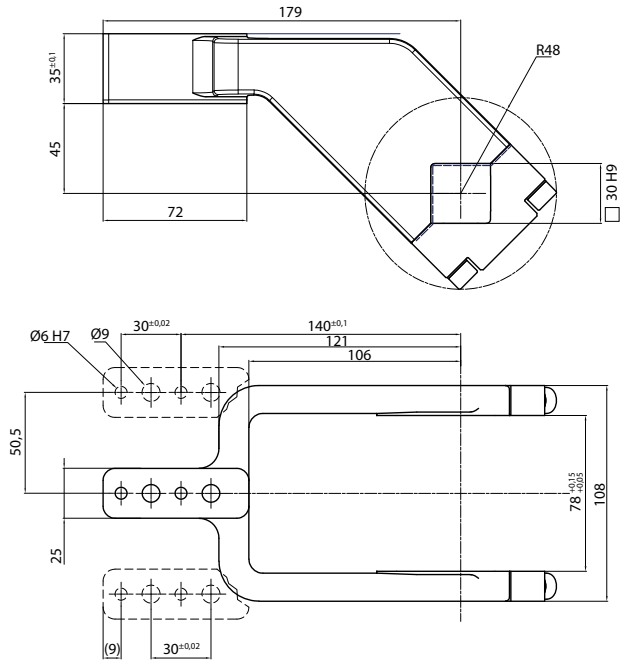

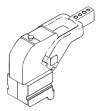

Armcode	Offset	Material	Arm style	Weight (Kg)	Opening angle (90°)	Opening angle (180°)
LKP80C	20	ALUMINIUM	CENTRAL	0,6	0÷135°	0÷105°
LKP80D	20	ALUMINIUM	RIGHT	0,6	0÷135°	0÷105°
LKP80S	20	ALUMINIUM	LEFT	0,6	0÷135°	0÷105°
UKP80CS	20	STEEL	CENTRAL	2,3	0÷135°	0÷105°
UKP80DS	20	STEEL	RIGHT	2,3	0÷135°	0÷105°
UKP80SS	20	STEEL	LEFT	2,3	0÷135°	0÷105°
UKP80E	45	ALUMINIUM	CENTRAL	0,6	0÷135°	0÷125°
UKP80F	45	ALUMINIUM	RIGHT	0,6	0÷135°	0÷125°
UKP80L	45	ALUMINIUM	LEFT	0,6	0÷135°	0÷125°
UKP80ES	45	STEEL	CENTRAL	2,2	0÷135°	0÷125°
UKP80FS	45	STEEL	RIGHT	2,2	0÷135°	0÷125°
UKP80LS	45	STEEL	LEFT	2,2	0÷135°	0÷125°

Sensors

Electronic (optical)

DF-K PNP M12
DF-J NPN M12
DF-Y PNP M12 White LED

Pneumatic

DF-UPNW80

Accessories

Self holding system

UBK46P30

UCBM 40

Pneumatic power clamps Ø40 mm with hand lever

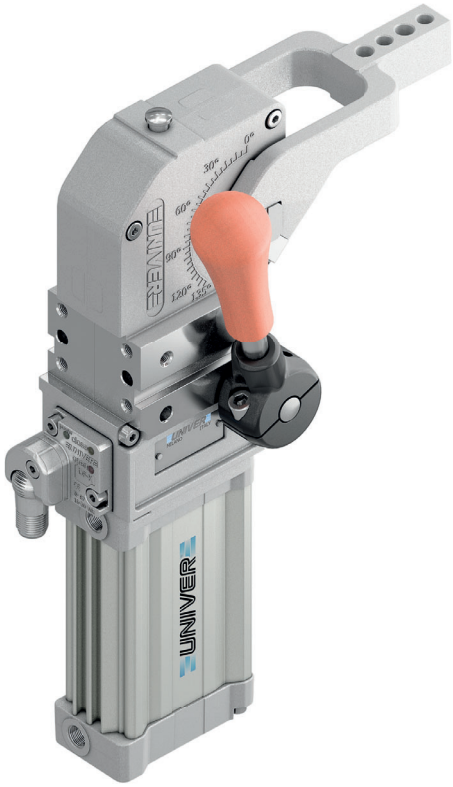

Pneumatic power clamps with compensation system, toggle-joint mechanism and stepless adjustable opening angle, typically used for handling and holding metal sheets in welding applications

- Lightweight aluminium construction ideal for mounting on grippers
- Compact dimensions
- Integrated compensation system up to 2 mm
- Hand lever mount on both sides
- Fully optical electronic sensor or pneumatic sensor
- Fixing pattern on 4 sides
- Manual unlocking in case of air loss
- Self-holding system for open position available
- Clamping arm in aluminium or steel

CHARACTERISTICS

Operating temperature	**5° ÷ 45° C**
Min./Max. Operating pressure	**0,4 / 0,6 MPa**
Opening angle*	**0° ÷ 135°**
Bore Ø	**40 mm**
Holding moment	**600 Nm**
Clamping moment (0,5 MPa)	**170 Nm**
Weight (clamping arm not included)	**1,8 Kg**
Pneumatic supply ports	**G1/8 on both sides**
Sensor	**electronic (optical)**
Supply voltage	**10 ÷ 30 Vdc**
IP code	**IP65**

**The opening angle range may vary according to the arm position and style.*

COMPENSATION

LIGHTWEIGHT

IRREVERSIBLE

ANGLE ADJUSTMENT

OPTICAL SENSOR

COMPACT

CODIFICATION KEY

UC	B	M	40	O	E	A	K	0	
1	2	3	4	5	6	7	8	9	10

1 SERIES
UC = UNICLAMP Power clamps

2 STANDARD
B = European standard

3 VERSION
M = Pneumatic with hand lever

4 SIZE
40 = Ø40 mm

5 ARM POSITION

V = 90°

O = 180°

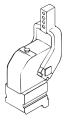

N = No arm

6 ARM STYLE
C = Central, 15 mm offset
D = Right, 15 mm offset
S = Left, 15 mm offset
E = Central, 45 mm offset
F = Right, 45 mm offset
L = Left, 45 mm offset
N = No arm
For other versions contact our Sales Dept.

7 ARM TYPE
A = Aluminium
S = Steel
N = No arm

8 SENSOR
N = No sensor (with protection plate)
K = Electronic sensor PNP, M12 (DF-K)
D = Pneumatic sensor (DF-UPNW)
J = Electronic sensor NPN, optical (DF-J)
Y = Electronic sensor PNP, M12 (DF-Y) white LED

9 PRODUCT REVISION
Assigned by UNIVER

10 ATEX
X = ATEX option
See ATEX Catalogue for types and versions

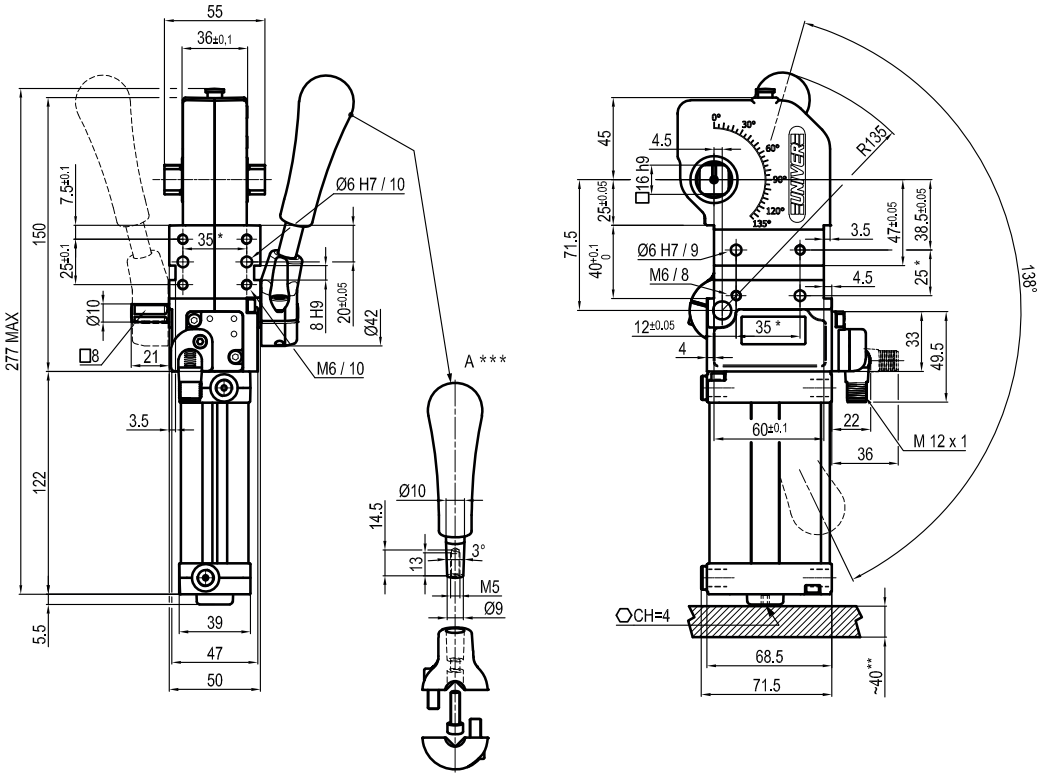

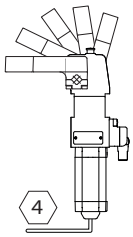

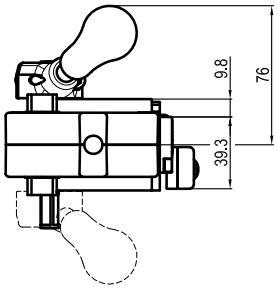

**TOLERANCE BETWEEN DOWELS ± 0,02 BETWEEN SCREW HOLES ± 0,1*
***AREA TO ACCESS ANGLE ADJUSTMENT*
****DIMENSIONS TO BE RESPECTED IN CASE OTHER HAND LEVERS ARE USED*

Maximum Applicable Load

Pressure: 5 bar - 90° cycle time (Open - Close)

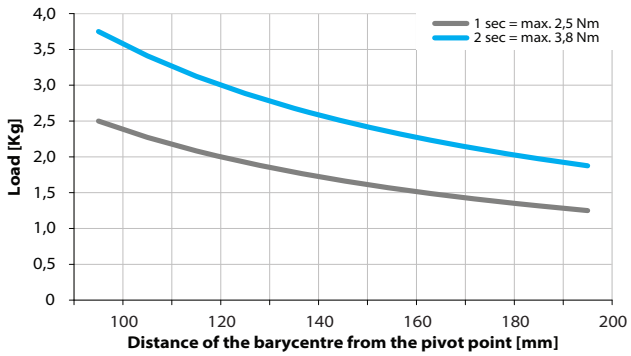

Air Consumption per Cycle

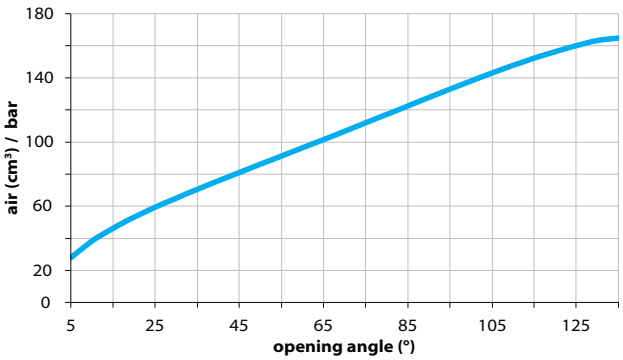

Clamping Arms

Arm Offset 15mm

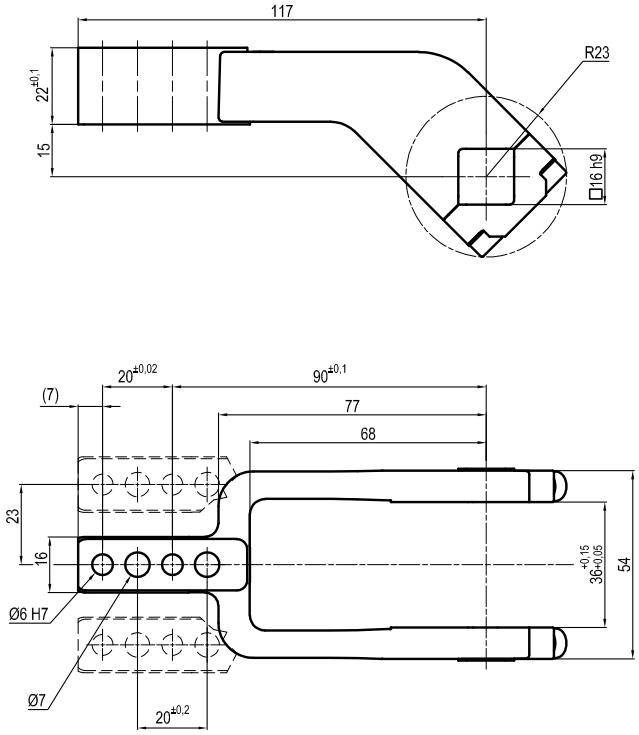

Arm Offset 45mm

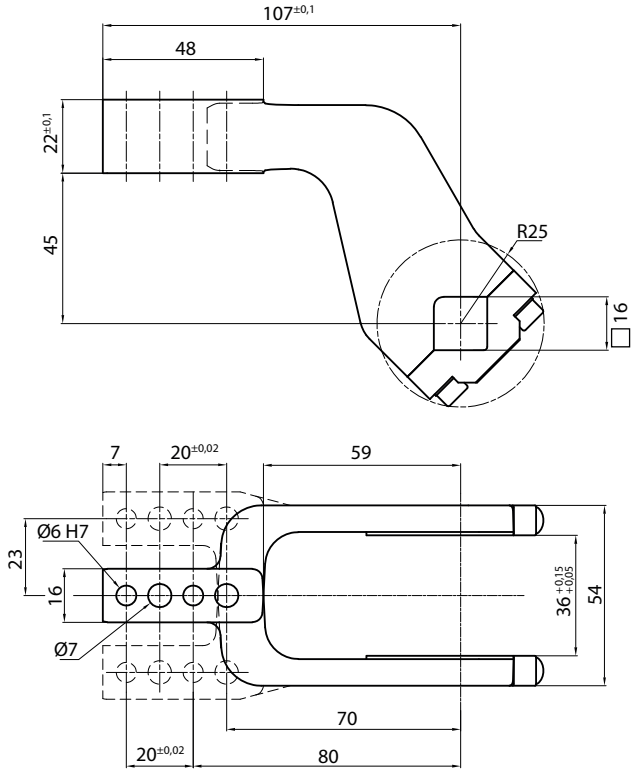

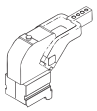

Armcode	Offset	Material	Arm style	Weight (Kg)	Opening angle (90°)	Opening angle (180°)
LKP01CST	15	ALUMINIUM	CENTRAL	0,2	0÷135°	0÷125°
LKP01DST	15	ALUMINIUM	RIGHT	0,2	0÷135°	0÷125°
LKP01SST	15	ALUMINIUM	LEFT	0,2	0÷135°	0÷125°
UP120151441S	15	STEEL	CENTRAL	0,4	0÷135°	0÷125°
UP120151442S	15	STEEL	RIGHT	0,4	0÷135°	0÷125°
UP120151443S	15	STEEL	LEFT	0,4	0÷135°	0÷125°
UKP01E	45	ALUMINIUM	CENTRAL	0,25	0÷125°	0÷135°
UKP01F	45	ALUMINIUM	RIGHT	0,25	0÷125°	0÷135°
UKP01L	45	ALUMINIUM	LEFT	0,25	0÷125°	0÷135°
UKP01ES	45	STEEL	CENTRAL	0,4	0÷125°	0÷135°
UKP01FS	45	STEEL	RIGHT	0,4	0÷125°	0÷135°
UKP01LS	45	STEEL	LEFT	0,4	0÷125°	0÷135°

Sensors

Electronic (optical)

DF-K PNP M12
DF-J NPN M12
DF-Y PNP M12 White LED

Pneumatic

DF-UPNW

Accessories

Handlever

UBF2540

Self holding system

UBK46P16 For arm 15 offset
UBK46P16-45 For arm 45 offset

UCBT 40

Pneumatic power clamps Ø40 mm with central hand lever

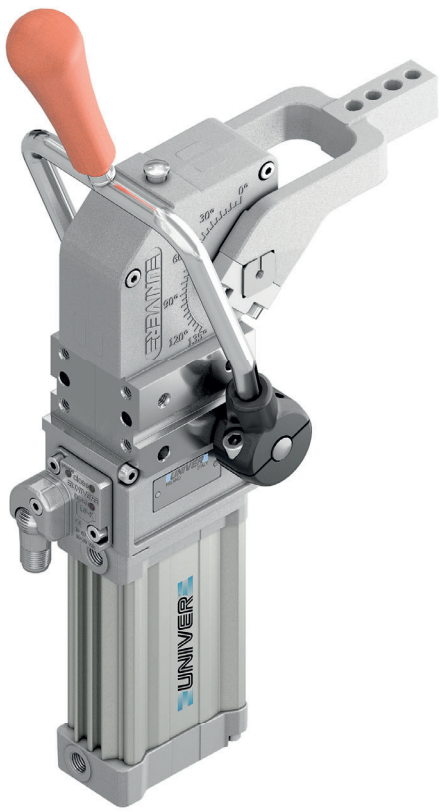

Pneumatic power clamps with compensation system, toggle-joint mechanism and stepless adjustable opening angle, typically used for handling and holding metal sheets in welding applications

- Lightweight aluminium construction
- Compact dimensions
- Integrated compensation system up to 2,0 mm
- Central hand lever standard supplied
- Fully optical electronic sensor or pneumatic sensor
- Fixing pattern on 2 sides
- Manual unlocking in case of air loss
- Self-holding system for open position available
- Clamping arm in aluminium or steel

CHARACTERISTICS

Operating temperature	**5° ÷ 45° C**
Min./Max. Operating pressure	**0,4 / 0,6 MPa**
Opening angle*	**0° ÷ 135°**
Bore Ø	**40 mm**
Holding moment	**600 Nm**
Clamping moment (0,5 MPa)	**170 Nm**
Weight (clamping arm not included)	**2,1 Kg**
Pneumatic supply ports	**G1/8 on both sides**
Sensor	**electronic (optical)**
Supply voltage	**10 ÷ 30 Vdc**
IP code	**IP65**

**The opening angle range may vary according to the arm position and style.*

COMPENSATION

LIGHTWEIGHT

IRREVERSIBLE

ANGLE ADJUSTMENT

OPTICAL SENSOR

COMPACT

CODIFICATION KEY

UC	B	T	40	O	E	A	K	0	
1	2	3	4	5	6	7	8	9	10

1 SERIES
UC = UNICLAMP Power clamps

2 STANDARD
B = European standard

3 VERSION
T = Pneumatic with central hand lever

4 SIZE
40 = Ø40 mm

5 ARM POSITION

V = 90°

O = 180°

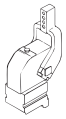

N = No arm

6 ARM STYLE
C = Central, 15 mm offset
D = Right, 15 mm offset
S = Left, 15 mm offset
E = Central, 45 mm offset
F = Right, 45 mm offset
L = Left, 45 mm offset
N = No arm
For other versions contact our Sales Dept.

7 ARM TYPE
A = Aluminium
S = Steel
N = No arm

8 SENSOR
N = No sensor (with protection plate)
K = Electronic sensor PNP, M12 (DF-K)
D = Pneumatic sensor (DF-UPNW)
J = Electronic sensor NPN, optical (DF-J)
Y = Electronic sensor PNP, M12 (DF-Y) white LED

9 PRODUCT REVISION
Assigned by UNIVER

10 ATEX
X = ATEX option
See ATEX Catalogue for types and versions

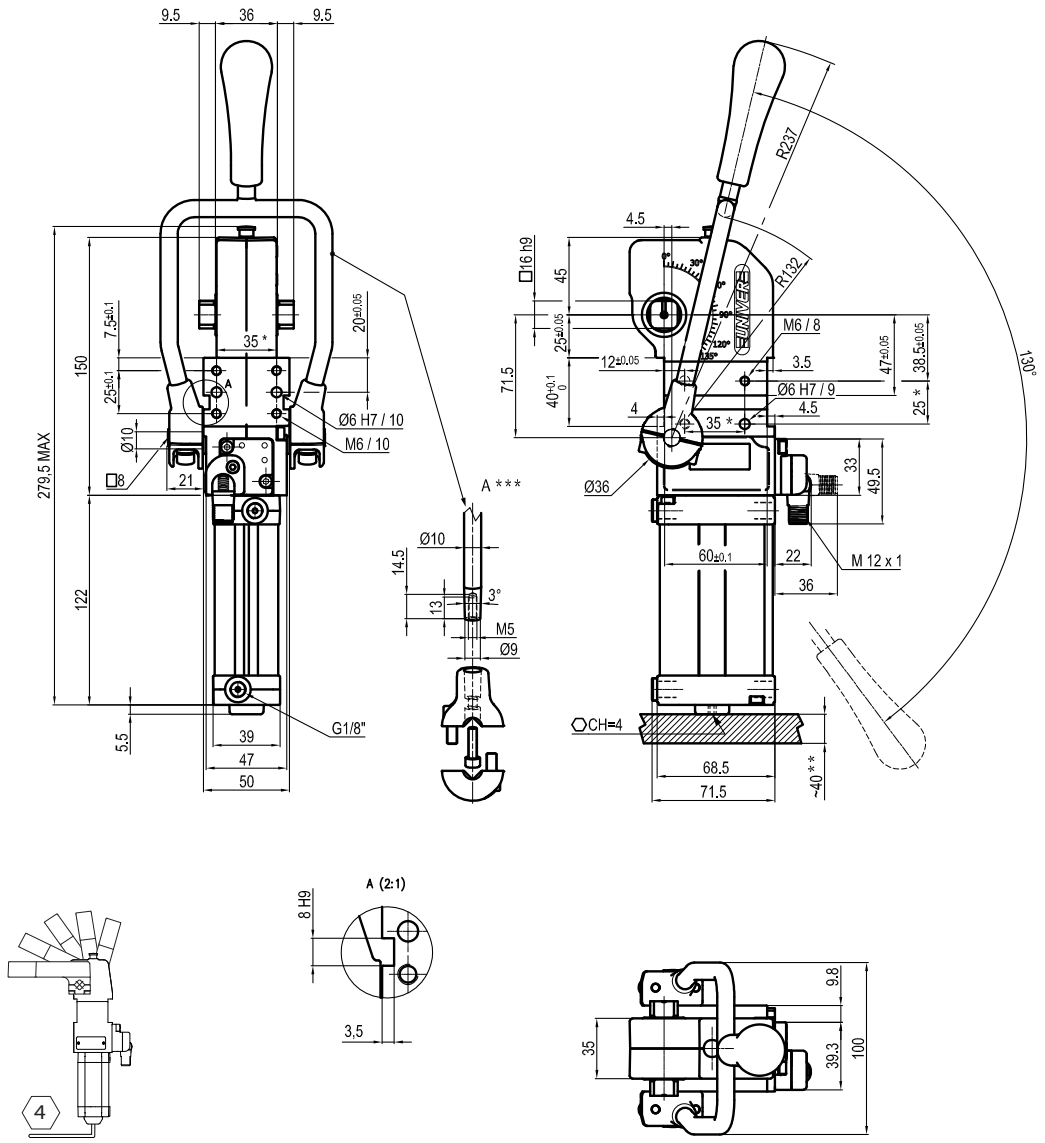

**TOLERANCE BETWEEN DOWELS ± 0,02 BETWEEN SCREW HOLES ± 0,1*
***AREA TO ACCESS ANGLE ADJUSTMENT*
****DIMENSIONS TO BE RESPECTED IN CASE OTHER MANUAL LEVERS ARE USED*

Maximum Applicable Load

Pressure: 5 bar - 90° cycle time (Open - Close)

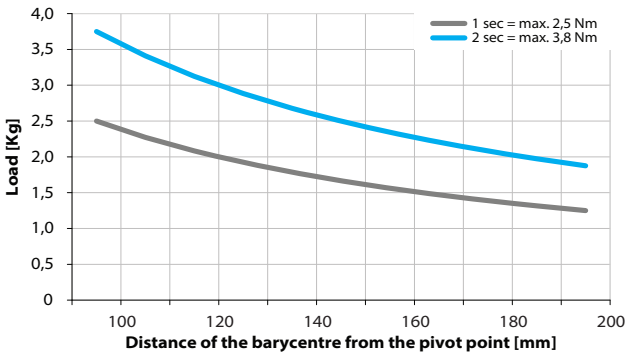

Air Consumption per Cycle

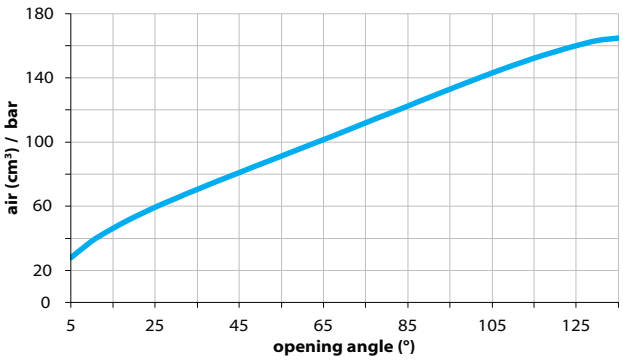

Clamping Arms

Arm Offset 15mm

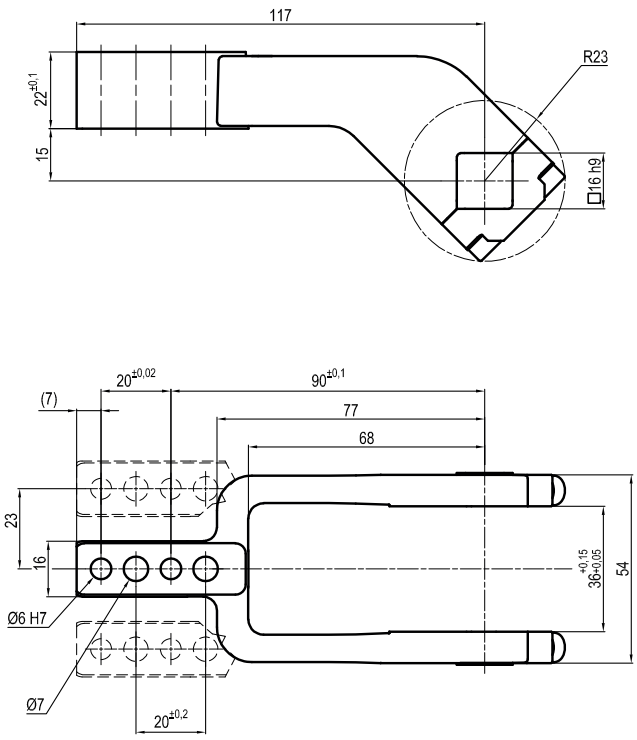

Arm Offset 45mm

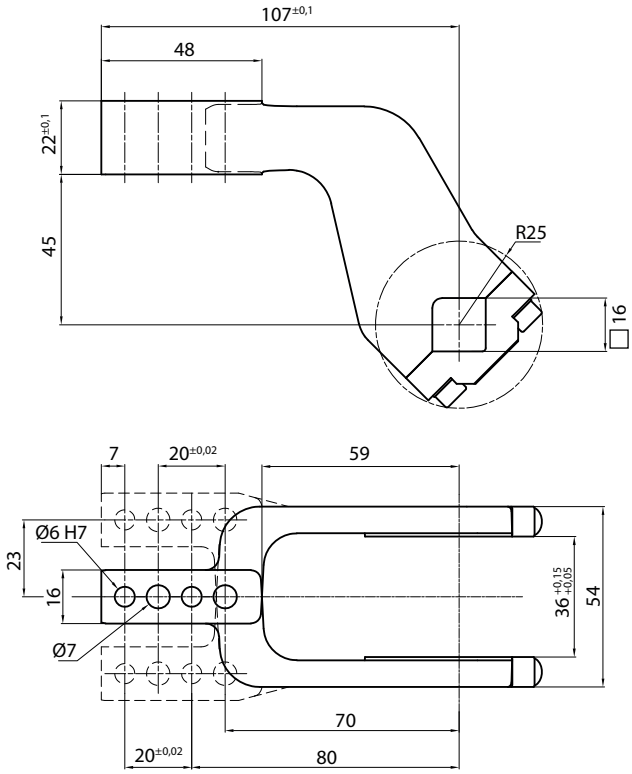

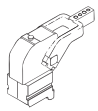

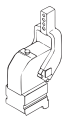

Armcode	Offset	Material	Arm style	Weight (Kg)	Opening angle (90°)	Opening angle (180°)
LKP01CST	15	ALUMINIUM	CENTRAL	0,2	0÷135°	0÷125°
LKP01DST	15	ALUMINIUM	RIGHT	0,2	0÷135°	0÷125°
LKP01SST	15	ALUMINIUM	LEFT	0,2	0÷135°	0÷125°
UP120151441S	15	STEEL	CENTRAL	0,4	0÷135°	0÷125°
UP120151442S	15	STEEL	RIGHT	0,4	0÷135°	0÷125°
UP120151443S	15	STEEL	LEFT	0,4	0÷135°	0÷125°
UKP01E	45	ALUMINIUM	CENTRAL	0,25	0÷125°	0÷135°
UKP01F	45	ALUMINIUM	RIGHT	0,25	0÷125°	0÷135°
UKP01L	45	ALUMINIUM	LEFT	0,25	0÷125°	0÷135°
UKP01ES	45	STEEL	CENTRAL	0,4	0÷125°	0÷135°
UKP01FS	45	STEEL	RIGHT	0,4	0÷125°	0÷135°
UKP01LS	45	STEEL	LEFT	0,4	0÷125°	0÷135°

Sensors

Electronic (optical)

DF-K PNP M12
DF-J NPN M12
DF-Y PNP M12 White LED

Pneumatic

DF-UPNW

Accessories

Handlever

UBTF2540

Self holding system

UBK46P16 For arm 15 offset
UBK46P16-45 For arm 45 offset

UCIM 40

Pneumatic power clamps Ø40 mm with hand lever, interchangeable with Ø50-63 mm

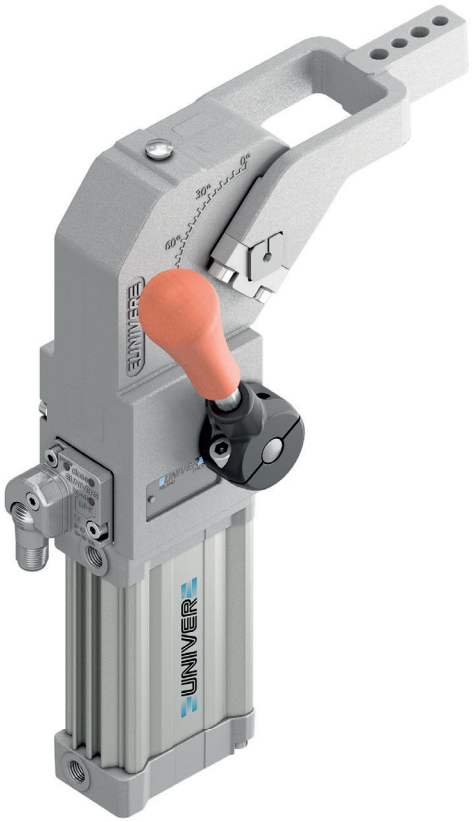

Pneumatic power clamps size Ø40 mm with fixing patterns interchangeable with size Ø50-63 mm, compensation system, toggle-joint mechanism and stepless adjustable opening angle, typically used for handling and holding metal sheets in welding applications

- Lightweight aluminium construction
- Compact dimensions
- Integrated compensation system up to 2 mm
- Hand lever mount on both sides
- Fully optical electronic sensor or pneumatic sensor
- Fixing pattern on the front side
- Manual unlocking in case of air loss
- Self-holding system for open position available
- Clamping arm in aluminium

CHARACTERISTICS

Operating temperature	**5° ÷ 45° C**
Min./Max. Operating pressure	**0,4 / 0,6 MPa**
Opening angle*	**0° ÷ 135°**
Bore Ø	**40 mm**
Holding moment	**600 Nm**
Clamping moment (0,5 MPa)	**170 Nm**
Weight (clamping arm not included)	**2,1 Kg**
Pneumatic supply ports	**G1/8 on both sides**
Sensor	**electronic (optical)**
Supply voltage	**10 ÷ 30 Vdc**
IP code	**IP65**

**The opening angle range may vary according to the arm position and style.*

COMPENSATION

LIGHTWEIGHT

IRREVERSIBLE

ANGLE ADJUSTMENT

OPTICAL SENSOR

COMPACT

CODIFICATION KEY

UC	I	M	40	O	E	A	N	K	0	
1	2	3	4	5	6	7	8	9	10	11

1 SERIES
UC = UNICLAMP Power clamps

2 STANDARD
I = Interchangeable with size Ø50/63 mm

3 VERSION
M = Pneumatic with hand lever

4 SIZE
40 = Ø40 mm

5 ARM POSITION

V = 90°

O = 180°

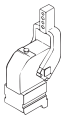

N = No arm

6 ARM STYLE
C = Central, 15 mm offset
D = Right, 15 mm offset
S = Left, 15 mm offset
E = Central, 45 mm offset
F = Right, 45 mm offset
L = Left, 45 mm offset
N = No arm
For other versions contact our Sales Dept.

7 ARM TYPE
A = Aluminium
S = Steel
N = No arm

8 OPTION
N = Standard
A = Preset for self-holding system

9 SENSOR
N = No sensor (with protection plate)
K = Electronic sensor PNP, M12 (DF-K)
D = Pneumatic sensor (DF-UPNW)
J = Electronic sensor NPN, optical (DF-J)
Y = Electronic sensor PNP, M12 (DF-Y) white LED

10 PRODUCT REVISION
Assigned by UNIVER

11 ATEX
X = ATEX option
See ATEX Catalogue for types and versions

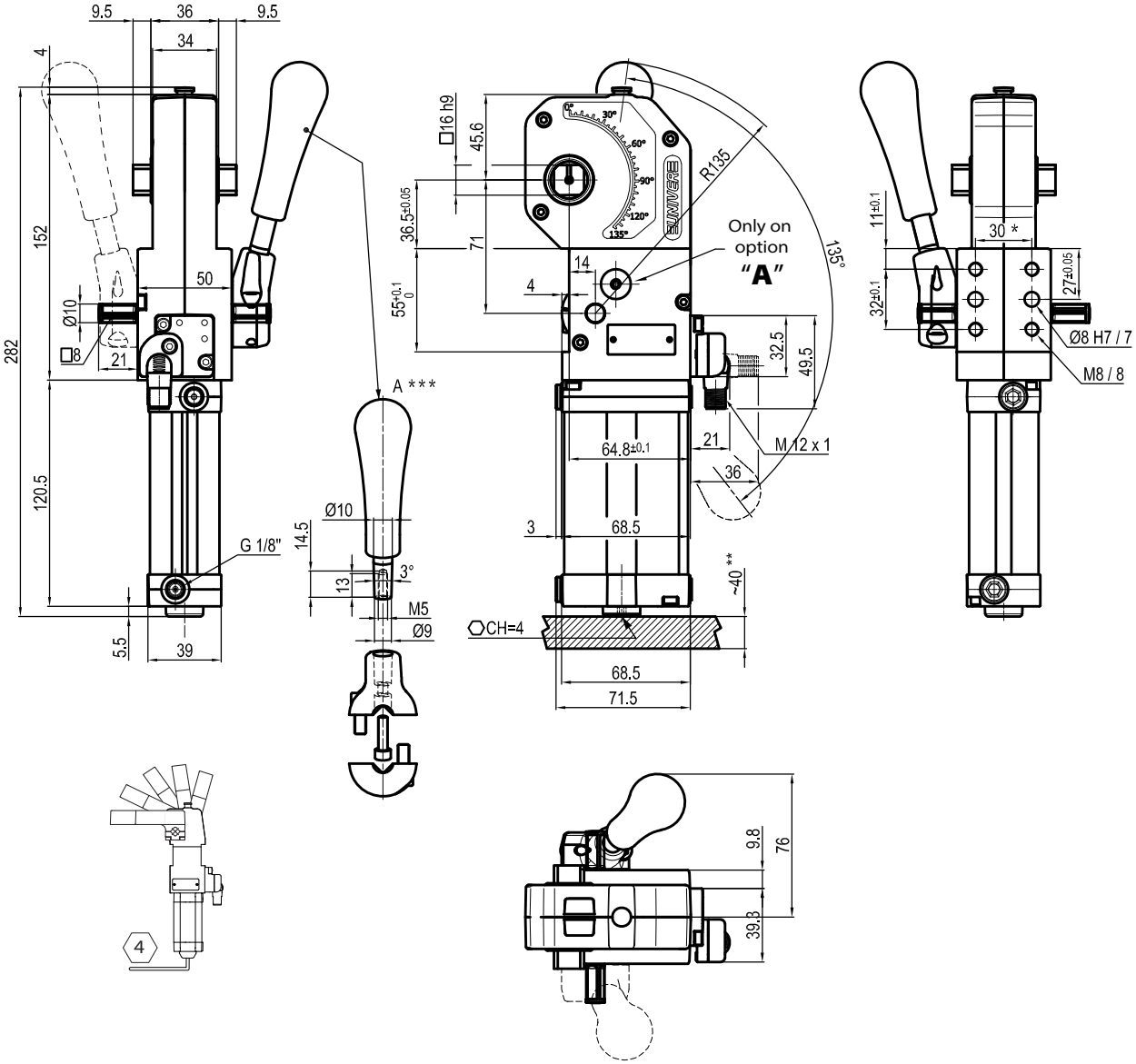

**TOLERANCE BETWEEN DOWELS ± 0,02 BETWEEN SCREW HOLES ± 0,1*
***AREA TO ACCESS ANGLE ADJUSTMENT*
****DIMENSIONS TO BE RESPECTED IN CASE OTHER HAND LEVERS ARE USED*

Maximum Applicable Load

Pressure: 5 bar - 90° cycle time (Open - Close)

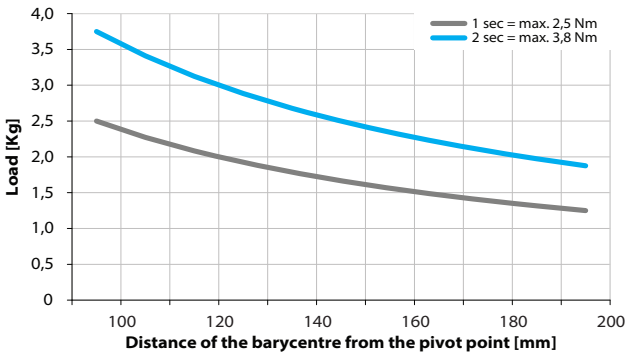

Air Consumption per Cycle

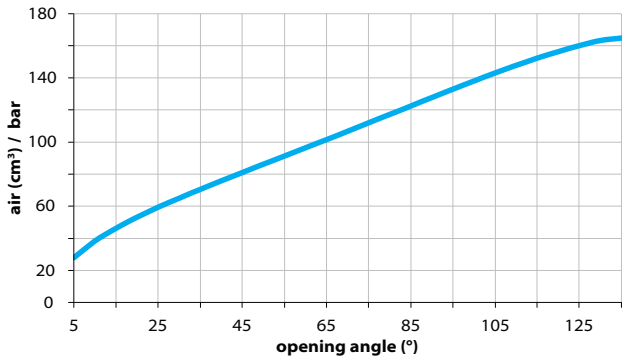

Clamping Arms

Arm Offset 15mm

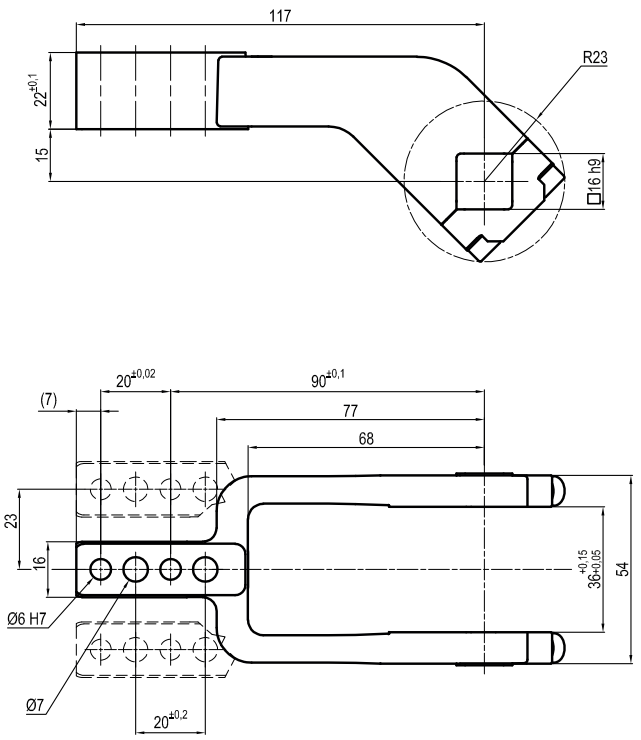

Arm Offset 45mm

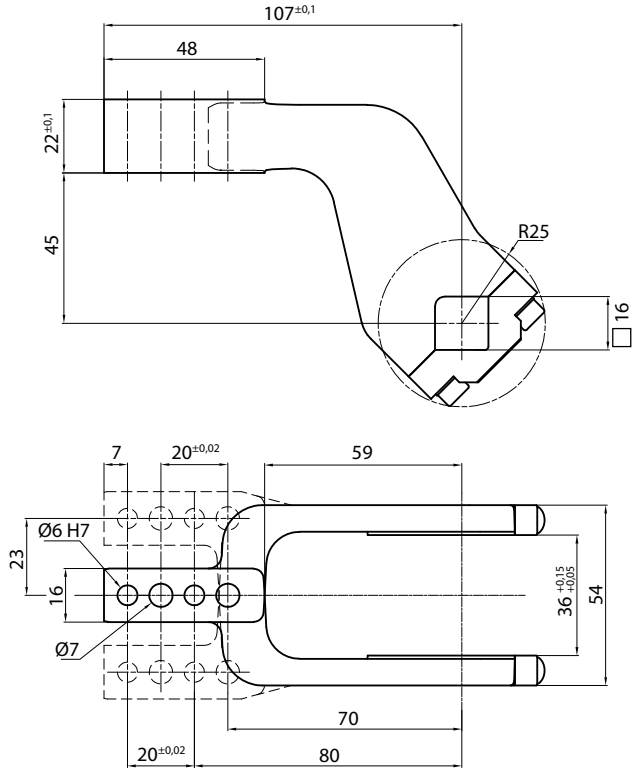

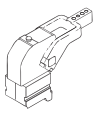
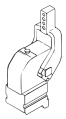

Armcode	Offset	Material	Arm style	Weight (Kg)	Opening angle (90°)	Opening angle (180°)
LKP01CST	15	ALUMINIUM	CENTRAL	0,2	0÷135°	0÷120°
LKP01DST	15	ALUMINIUM	RIGHT	0,2	0÷135°	0÷120°
LKP01SST	15	ALUMINIUM	LEFT	0,2	0÷135°	0÷120°
IKP40E	45	ALUMINIUM	CENTRAL	0,3	0÷120°	0÷120°
IKP40F	45	ALUMINIUM	RIGHT	0,3	0÷120°	0÷120°
IKP40L	45	ALUMINIUM	LEFT	0,3	0÷120°	0÷120°

Sensors

Electronic (optical)

DF-K PNP M12
DF-J NPN M12
DF-Y PNP M12 White LED

Pneumatic

DF-UPNW

Accessories

Handlever

UBF2540

Self holding system

UBK46P16 For arm 15 offset
UBK46P16-45 For arm 45 offset

UCBM 50

Pneumatic power clamps Ø50 mm with hand lever

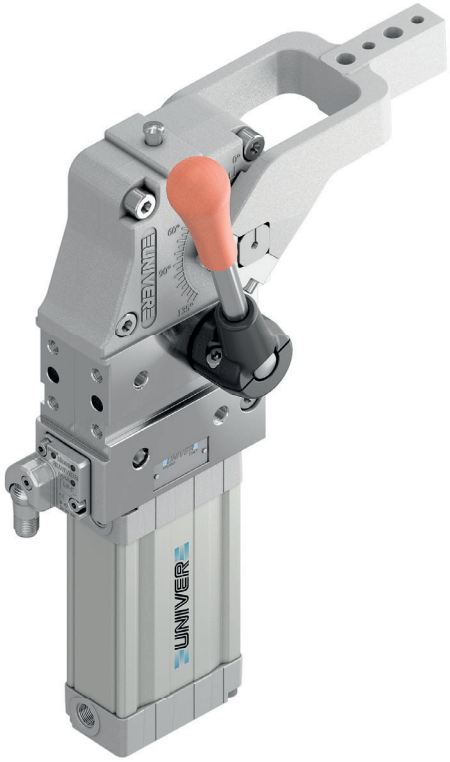

Pneumatic power clamps with compensation system, toggle-joint mechanism and stepless adjustable opening angle, typically used for handling and holding metal sheets in welding applications

- Lightweight aluminium construction
- Compact dimensions
- Integrated compensation system up to 1,7 mm
- Hand lever mount on both sides
- Fully optical electronic sensor or pneumatic sensor
- Fixing pattern on 4 sides
- Manual unlocking in case of air loss
- Self-holding system for open position available
- Clamping arm in aluminium or steel

CHARACTERISTICS

Operating temperature	**5° ÷ 45° C**
Min./Max. Operating pressure	**0,4 / 0,6 MPa**
Opening angle*	**0° ÷ 135°**
Bore Ø	**50 mm**
Holding moment	**1250 Nm**
Clamping moment (0,5 MPa)	**280 Nm**
Weight (clamping arm not included)	**3,2 Kg**
Pneumatic supply ports	**G1/4 on both sides**
Sensor	**electronic (optical)**
Supply voltage	**10 ÷ 30 Vdc**
IP code	**IP65**

**The opening angle range may vary according to the arm position and style.*

COMPENSATION

LIGHTWEIGHT

IRREVERSIBLE

ANGLE ADJUSTMENT

OPTICAL SENSOR

COMPACT

CODIFICATION KEY

UC	B	M	50	O	E	A	K	0	
1	2	3	4	5	6	7	8	9	10

1 SERIES
UC = UNICLAMP Power clamps

2 STANDARD
B = European standard

3 VERSION
M = Pneumatic with hand lever

4 SIZE
50 = Ø50 mm

5 ARM POSITION

V = 90°

O = 180°

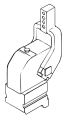

N = No arm

6 ARM STYLE
C = Central, 15 mm offset
D = Right, 15 mm offset
S = Left, 15 mm offset
E = Central, 45 mm offset
F = Right, 45 mm offset
L = Left, 45 mm offset
N = No arm
For other versions contact our Sales Dept.

7 ARM TYPE
A = Aluminium
S = Steel
N = No arm

8 SENSOR
N = No sensor (with protection plate)
K = Electronic sensor PNP, M12 (DF-K)
D = Pneumatic sensor (DF-UPNW)
J = Electronic sensor NPN, optical (DF-J)
Y = Electronic sensor PNP, M12 (DF-Y) white LED

9 PRODUCT REVISION
Assigned by UNIVER

10 ATEX
X = ATEX option
See ATEX Catalogue for types and versions

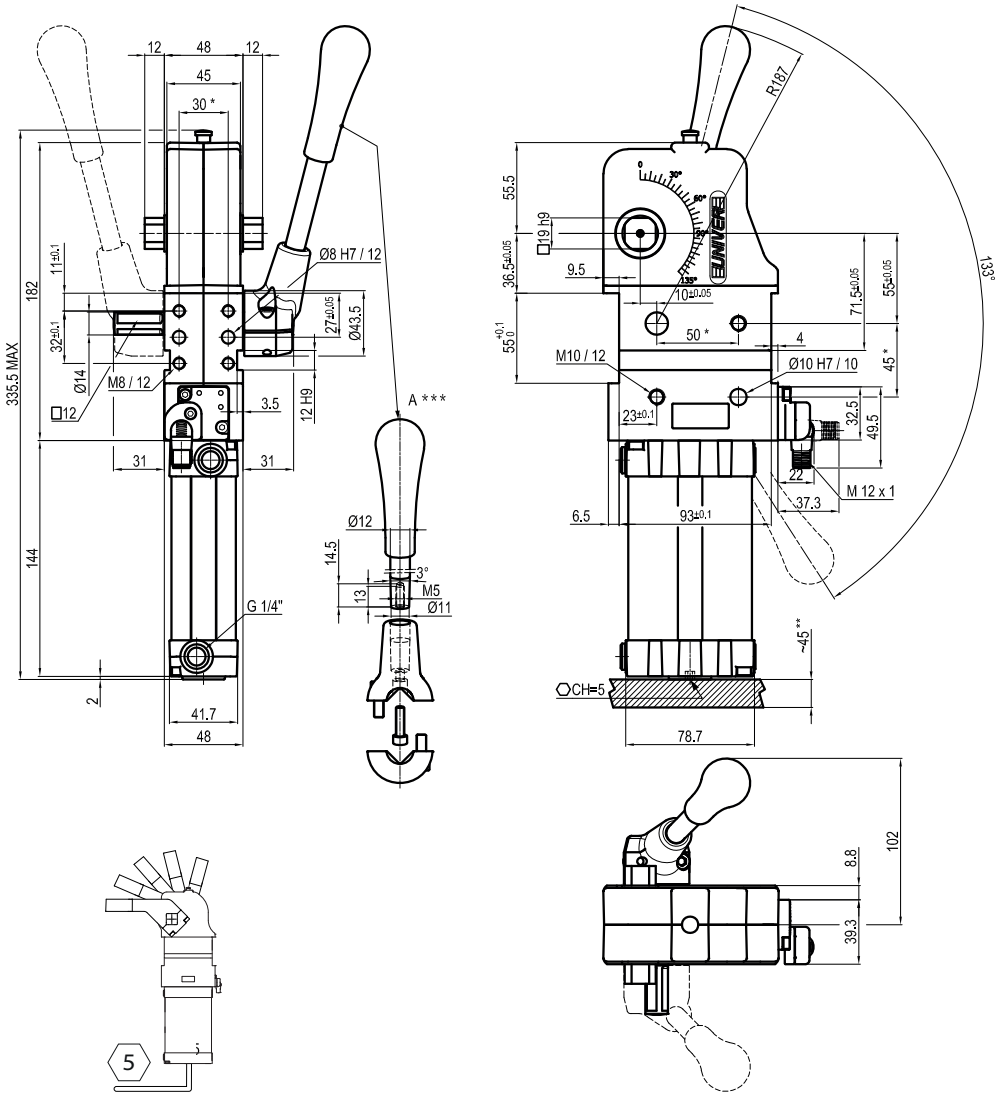

**TOLERANCE BETWEEN DOWELS ± 0,02 BETWEEN SCREW HOLES ± 0,1*
***AREA TO ACCESS ANGLE ADJUSTMENT*
****DIMENSIONS TO BE RESPECTED IN CASE OTHER MANUAL LEVERS ARE USED*

Maximum Applicable Load

Pressure: 5 bar - 90° cycle time (Open - Close)

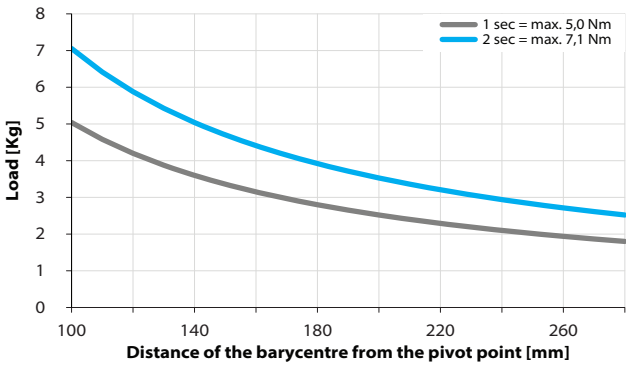

Air Consumption per Cycle

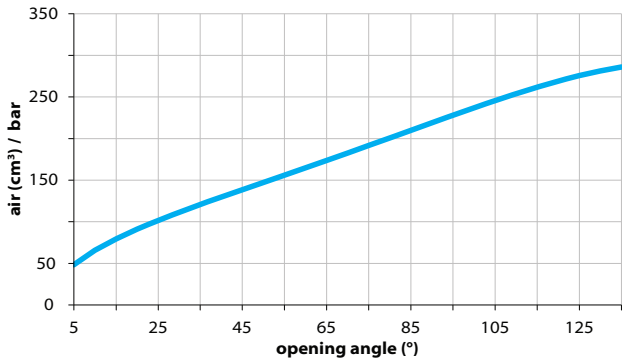

Clamping Arms

Arm Offset 15mm

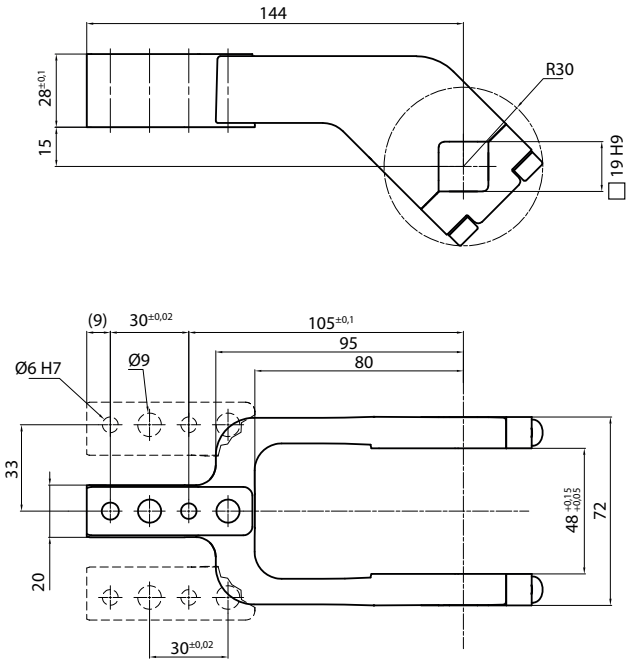

Arm Offset 45mm

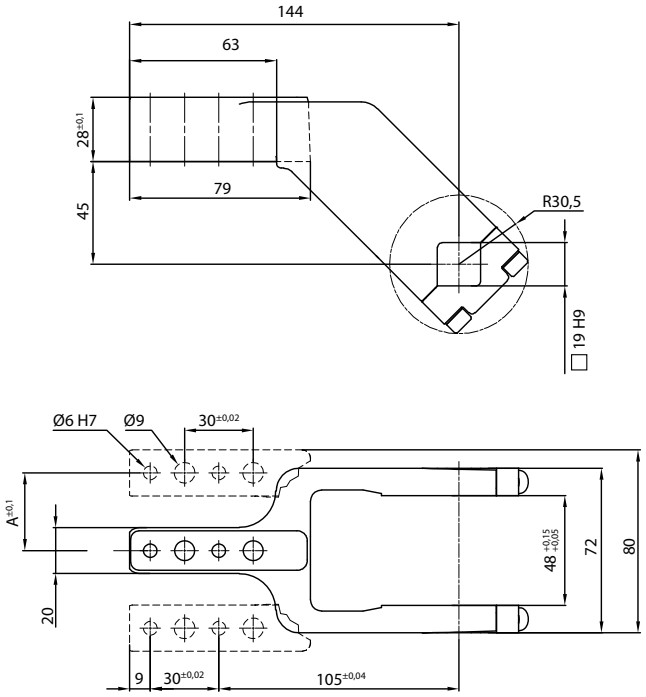

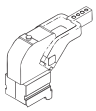

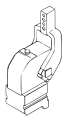

Armcode	Offset	Material	Arm style	Weight (Kg)	Opening angle (90°)	Opening angle (180°)
LKP00CL	15	ALUMINIUM	CENTRAL	0,4	0÷135°	0÷105°
LKP00DL	15	ALUMINIUM	RIGHT	0,4	0÷135°	0÷105°
LKP00SL	15	ALUMINIUM	LEFT	0,4	0÷135°	0÷105°
UP210151441G	15	STEEL	CENTRAL	0,8	0÷135°	0÷105°
UP210151442G	15	STEEL	RIGHT	0,8	0÷135°	0÷105°
UP210151443G	15	STEEL	LEFT	0,8	0÷135°	0÷105°
UKP5063E	45	ALUMINIUM	CENTRAL	0,45	0÷135°	0÷135°
UKP50F	45	ALUMINIUM	RIGHT	0,45	0÷135°	0÷135°
UKP50L	45	ALUMINIUM	LEFT	0,45	0÷135°	0÷135°
UKP5063ES	45	STEEL	CENTRAL	1,16	0÷135°	0÷135°
UKP50FS	45	STEEL	RIGHT	1,16	0÷135°	0÷135°
UKP50LS	45	STEEL	LEFT	1,16	0÷135°	0÷135°

Sensors

Electronic (optical)

DF-K PNP M12
DF-J NPN M12
DF-Y PNP M12 White LED

Pneumatic

DF-UPNW

Accessories

Handlever

UBF255063

Self holding system

UBK46P19

UCBM 63

Pneumatic power clamps Ø63 mm with hand lever

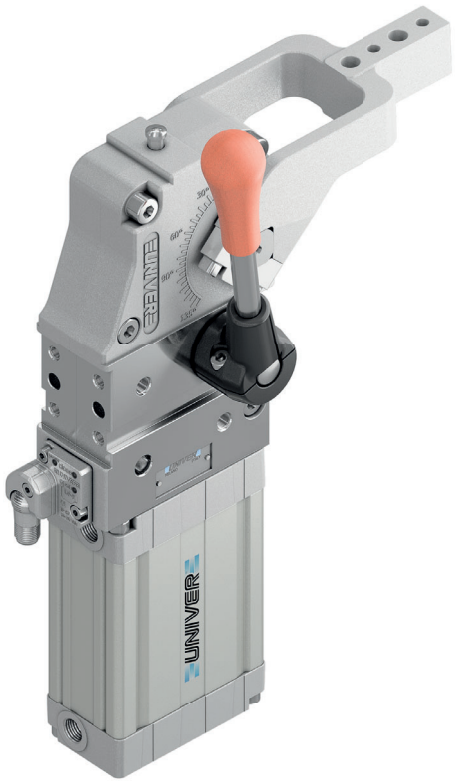

Pneumatic power clamps with compensation system, toggle-joint mechanism and stepless adjustable opening angle, typically used for handling and holding metal sheets in welding applications

- Lightweight aluminium construction
- Compact dimensions
- Integrated compensation system up to 2,7 mm
- Hand lever mount on both sides
- Fully optical electronic sensor or pneumatic sensor
- Fixing pattern on 4 sides
- Manual unlocking in case of air loss
- Self-holding system for open position available
- Clamping arm in aluminium or steel

CHARACTERISTICS

Operating temperature	**5° ÷ 45° C**
Min./Max. Operating pressure	**0,4 / 0,6 MPa**
Opening angle*	**0° ÷ 135°**
Bore Ø	**63 mm**
Holding moment	**1750 Nm**
Clamping moment (0,5 MPa)	**420 Nm**
Weight (clamping arm not included)	**3,6 Kg**
Pneumatic supply ports	**G1/4 on both sides**
Sensor	**electronic (optical)**
Supply voltage	**10 ÷ 30 Vdc**
IP code	**IP65**

**The opening angle range may vary according to the arm position and style.*

COMPENSATION

LIGHTWEIGHT

IRREVERSIBLE

ANGLE ADJUSTMENT

OPTICAL SENSOR

COMPACT

CODIFICATION KEY

UC	B	M	63	**O**	**E**	**A**	**K**	0	
1	2	3	4	5	6	7	8	9	10

1 SERIES
UC = UNICLAMP Power clamps

2 STANDARD
B = European standard

3 VERSION
M = Pneumatic with hand lever

4 SIZE
63 = Ø63 mm

5 ARM POSITION

V = 90°

O = 180°

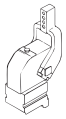

N = No arm

6 ARM STYLE
C = Central, 15 mm offset
D = Right, 15 mm offset
S = Left, 15 mm offset
E = Central, 45 mm offset
F = Right, 45 mm offset
L = Left, 45 mm offset
N = No arm
For other versions contact our Sales Dept.

7 ARM TYPE
A = Aluminium
S = Steel
N = No arm

8 SENSOR
N = No sensor (with protection plate)
K = Electronic sensor PNP, M12 (DF-K)
D = Pneumatic sensor (DF-UPNW)
J = Electronic sensor NPN, optical (DF-J)
Y = Electronic sensor PNP, M12 (DF-Y) white LED

9 PRODUCT REVISION
Assigned by UNIVER

10 ATEX
X = ATEX option
See ATEX Catalogue for types and versions

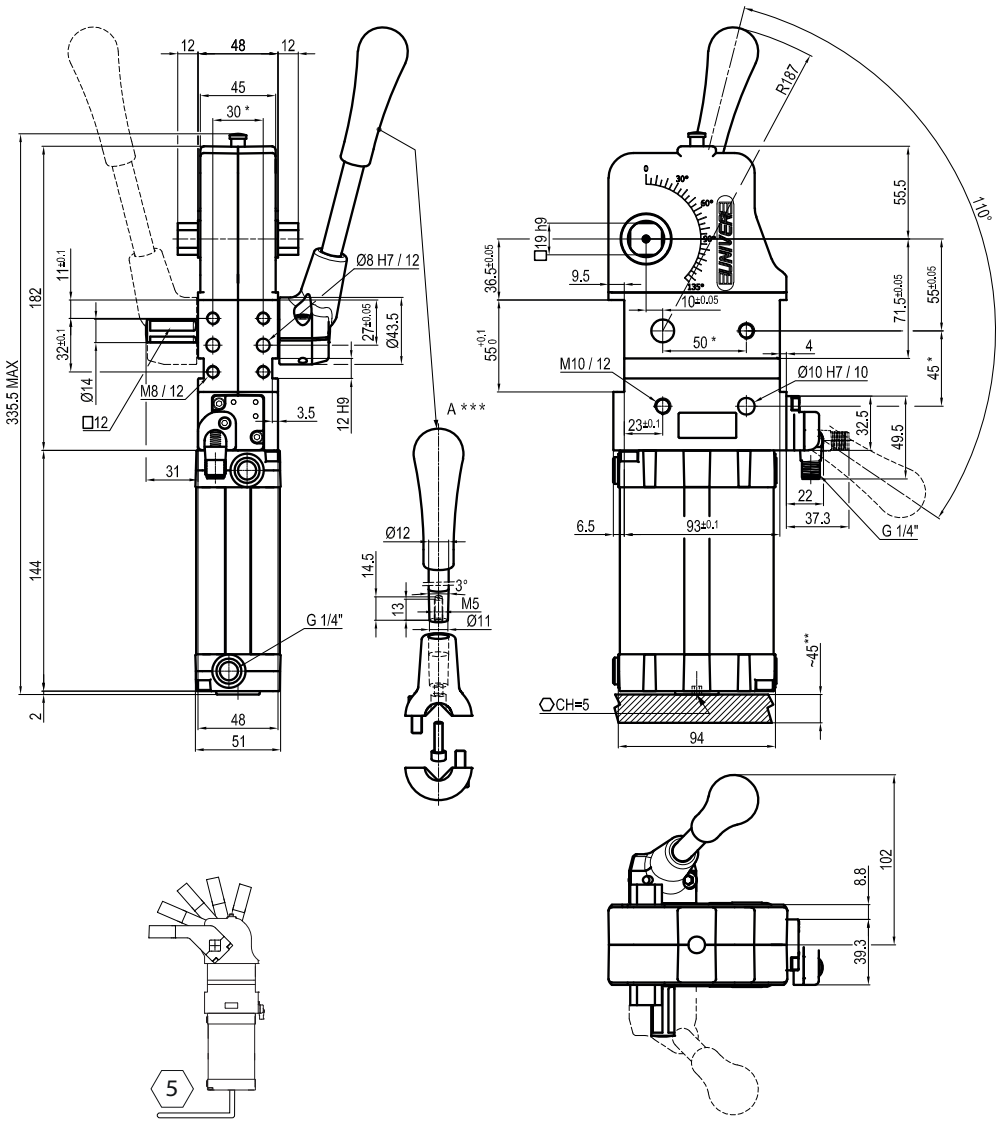

** TOLERANCE BETWEEN DOWELS ± 0,02, BETWEEN SCREW HOLES ± 0,1*
***AREA TO ACCESS ANGLE ADJUSTMENT*
****DIMENSION TO BE RESPECTED IN CASE OTHER MANUAL LEVERS ARE USED*

Maximum Applicable Load

Pressure: 5 bar - 90° cycle time (Open - Close)

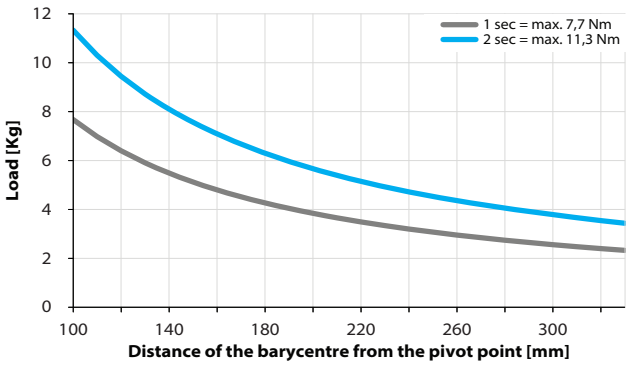

Air Consumption per Cycle

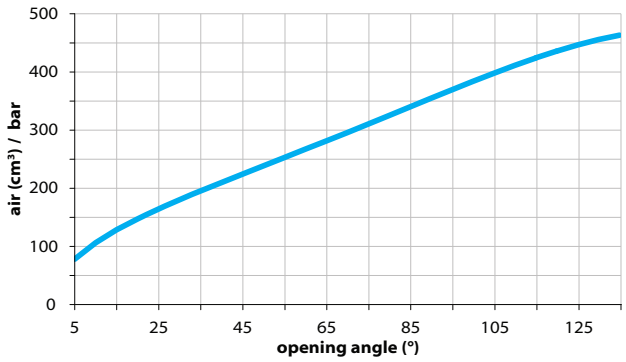

Clamping Arms

Arm Offset 15mm

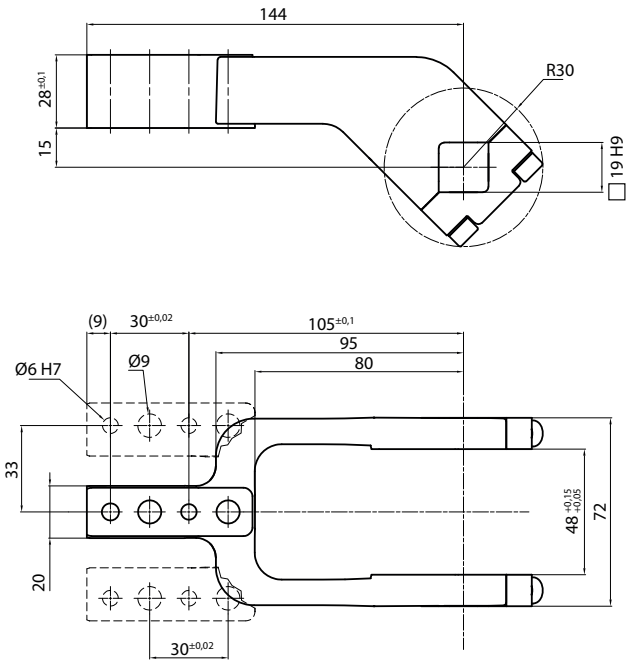

Arm Offset 45mm

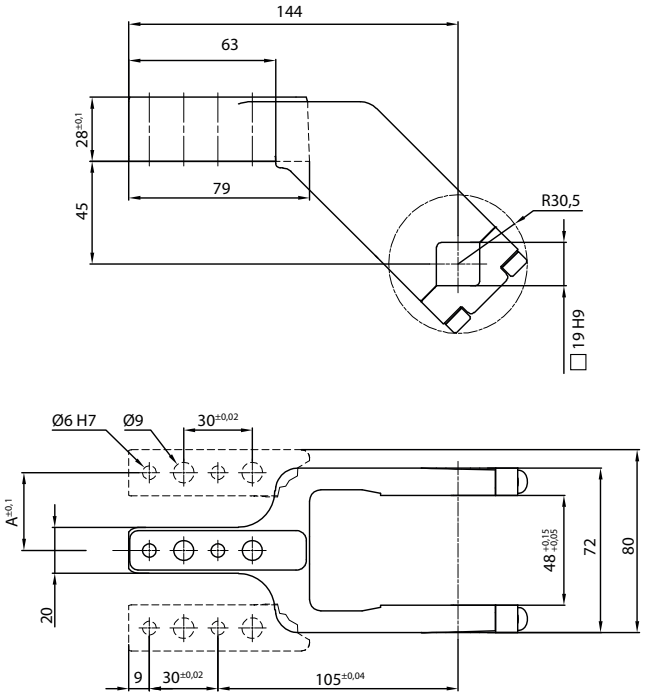

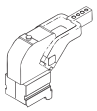

Armcode	Offset	Material	Arm style	Weight (Kg)	Opening angle (90°)	Opening angle (180°)
LKP00CL	15	ALUMINIUM	CENTRAL	0,4	0÷135°	0÷105°
LKP00DL	15	ALUMINIUM	RIGHT	0,4	0÷135°	0÷105°
LKP00SL	15	ALUMINIUM	LEFT	0,4	0÷135°	0÷105°
UP210151441G	15	STEEL	CENTRAL	0,8	0÷135°	0÷105°
UP210151442G	15	STEEL	RIGHT	0,8	0÷135°	0÷105°
UP210151443G	15	STEEL	LEFT	0,8	0÷135°	0÷105°
UKP5063E	45	ALUMINIUM	CENTRAL	0,45	0÷135°	0÷135°
UKP63F	45	ALUMINIUM	RIGHT	0,45	0÷135°	0÷135°
UKP63L	45	ALUMINIUM	LEFT	0,45	0÷135°	0÷135°
UKP5063ES	45	STEEL	CENTRAL	1,16	0÷135°	0÷135°
UKP63FS	45	STEEL	RIGHT	1,16	0÷135°	0÷135°
UKP63LS	45	STEEL	LEFT	1,16	0÷135°	0÷135°

Sensors

Electronic (optical)

DF-K PNP M12
DF-J NPN M12
DF-Y PNP M12 White LED

Pneumatic

DF-UPNW

Accessories

Handlever

UBF255063

Self holding system

UBK46P19

UCBQ 63

Pneumatic power clamps Ø63 mm, □22 mm with hand lever

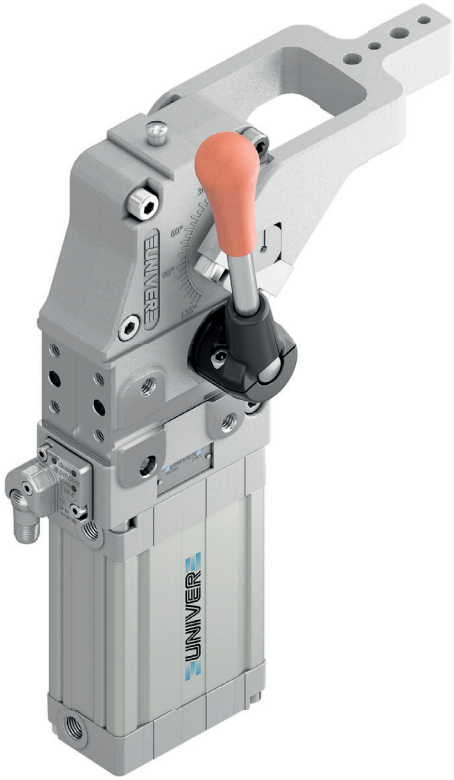

Pneumatic power clamps size Ø63 mm, □22 mm with hand lever, compensation system, toggle-joint mechanism and stepless adjustable opening angle, typically used for handling and holding metal sheets in welding applications

- Lightweight aluminium construction
- Compact dimensions
- Integrated compensation system up to 2,7 mm
- Hand lever mount on both sides
- Fully optical electronic sensor or pneumatic sensor
- Fixing pattern on 4 sides
- Manual unlocking in case of air loss
- Self-holding system for open position available
- Clamping arm in aluminium or steel

CHARACTERISTICS

Operating temperature	**5° ÷ 45° C**
Min./Max. Operating pressure	**0,4 / 0,6 MPa**
Opening angle*	**0° ÷ 135°**
Bore Ø	**63 mm**
Holding moment	**1750 Nm**
Clamping moment (0,5 MPa)	**420 Nm**
Weight (clamping arm not included)	**3,8 Kg**
Pneumatic supply ports	**G1/4 on both sides**
Sensor	**electronic (optical)**
Supply voltage	**10 ÷ 30 Vdc**
IP code	**IP65**

*The opening angle range may vary according to the arm position and style.

COMPENSATION

LIGHTWEIGHT

IRREVERSIBLE

ANGLE ADJUSTMENT

OPTICAL SENSOR

COMPACT

CODIFICATION KEY

UC	B	Q	63	**O**	**E**	**A**	**K**	0	
1	2	3	4	5	6	7	8	9	10

1 SERIES
UC = UNICLAMP Power clamps

2 STANDARD
B = European standard

3 VERSION
Q = Pneumatic □ 22 mm with hand lever

4 SIZE
63 = Ø 63 mm

5 ARM POSITION
V = 90°

O = 180°

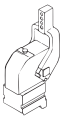

N = No arm

6 ARM STYLE
C = Central, 15 mm offset
D = Right, 15 mm offset
S = Left, 15 mm offset
E = Central, 45 mm offset
F = Right, 45 mm offset
L = Left, 45 mm offset
N = No arm
For other versions contact our Sales Dept.

7 ARM TYPE
A = Aluminium
S = Steel
N = No arm

8 SENSOR
N = No sensor (with protection plate)
K = Electronic sensor PNP, M12 (DF-K)
D = Pneumatic sensor (DF-UPNW)
J = Electronic sensor NPN, optical (DF-J)
Y = Electronic sensor PNP, M12 (DF-Y) white LED

9 PRODUCT REVISION
Assigned by UNIVER

10 ATEX
X = ATEX option
See ATEX Catalogue for types and versions

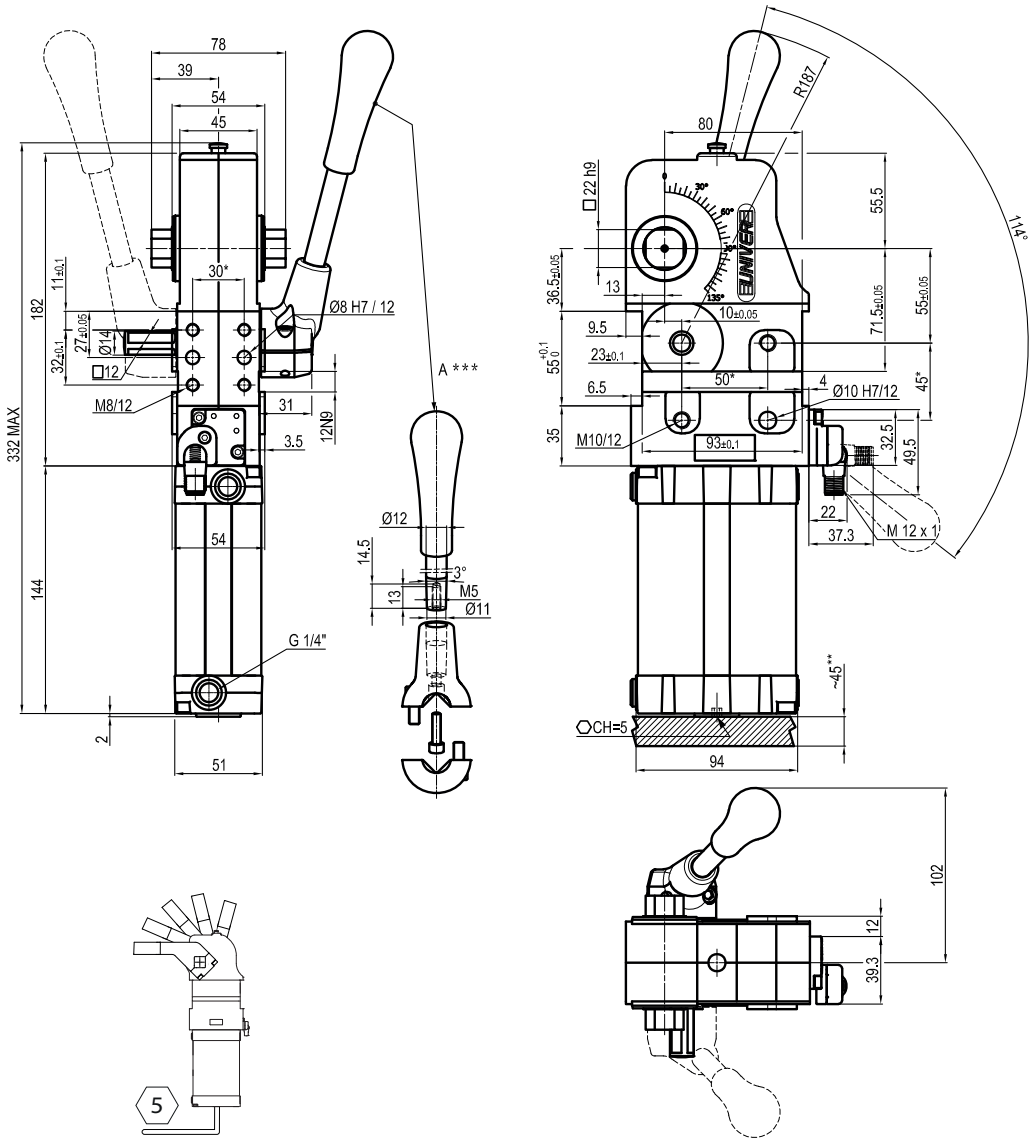

**TOLERANCE BETWEEN DOWELS ± 0,02 BETWEEN SCREW HOLES ± 0,1*
***AREA TO ACCESS ANGLE ADJUSTMENT*
****DIMENSIONS TO BE RESPECTED IN CASE OTHER MANUAL LEVERS ARE USED*

Maximum Applicable Load

Pressure: 5 bar - 90° cycle time (Open - Close)

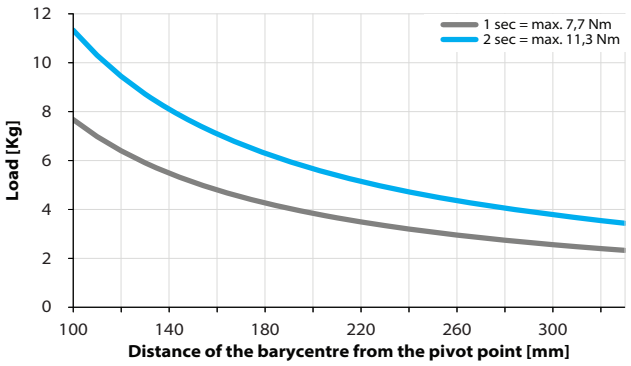

Air Consumption per Cycle

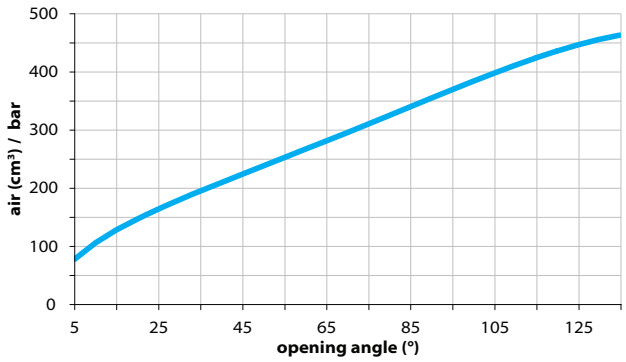

Clamping Arms

Arm Offset 15mm

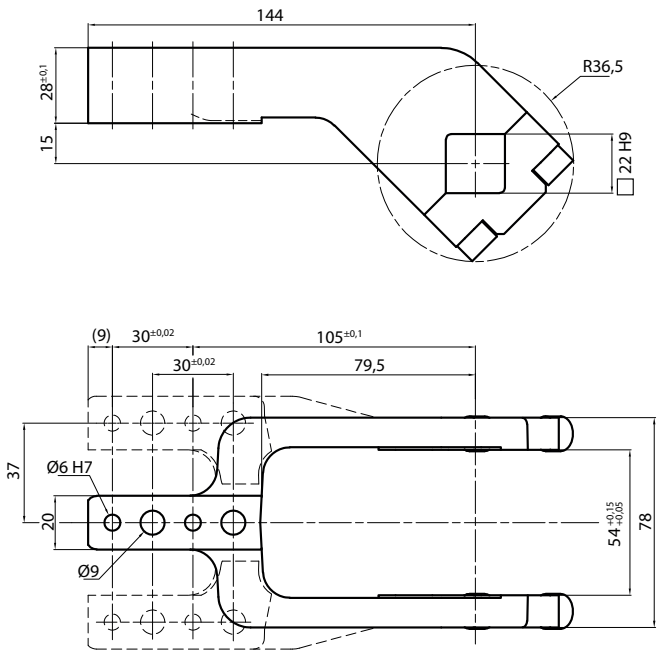

Arm Offset 45mm

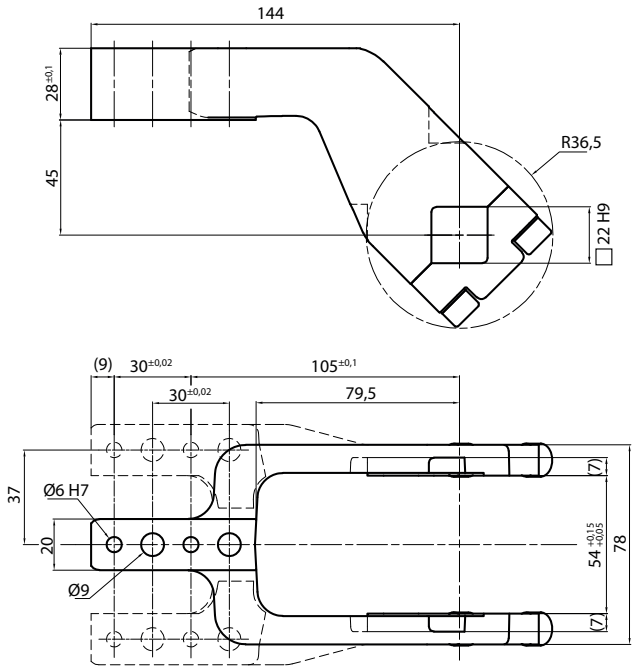

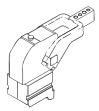

Armcode	Offset	Material	Arm style	Weight (Kg)	Opening angle (90°)	Opening angle (180°)
UP310151441A	15	ALUMINIUM	CENTRAL	0,3	0÷135°	0÷110°
UP310151442A	15	ALUMINIUM	RIGHT	0,3	0÷135°	0÷110°
UP310151443A	15	ALUMINIUM	LEFT	0,3	0÷135°	0÷110°
UP310151441S	15	STEEL	CENTRAL	1,2	0÷135°	0÷110°
UP310151442S	15	STEEL	RIGHT	1,2	0÷135°	0÷110°
UP310151443S	15	STEEL	LEFT	1,2	0÷135°	0÷110°
UP310451441A	45	ALUMINIUM	CENTRAL	0,3	0÷135°	0÷135°
UP310451442A	45	ALUMINIUM	RIGHT	0,3	0÷135°	0÷135°
UP310451443A	45	ALUMINIUM	LEFT	0,3	0÷135°	0÷135°
UP310451441S	45	STEEL	CENTRAL	1,4	0÷135°	0÷135°
UP310451442S	45	STEEL	RIGHT	1,4	0÷135°	0÷135°
UP310451443S	45	STEEL	LEFT	1,4	0÷135°	0÷135°

Sensors

Electronic (optical)

DF-K PNP M12
DF-J NPN M12
DF-Y PNP M12 White LED

Pneumatic

DF-UPNW

Accessories

Handlever

UBF255063

Self holding system

UBK46P22

UCBM 80

Pneumatic power clamps Ø80 mm with hand lever

Pneumatic power clamps with compensation system, toggle-joint mechanism and stepless adjustable opening angle, typically used for handling and holding metal sheets in welding applications

- Lightweight aluminium construction
- Integrated compensation system up to 2,9 mm
- Hand lever mount on both sides
- Fully optical electronic sensor or pneumatic sensor
- Fixing pattern on 4 sides
- Manual unlocking in case of air loss
- Self-holding system for open position available
- Clamping arm in aluminium or steel

CHARACTERISTICS

Operating temperature	**5° ÷ 45° C**
Min./Max. Operating pressure	**0,4 / 0,6 MPa**
Opening angle*	**0° ÷ 135°**
Bore Ø	**80 mm**
Holding moment	**4000 Nm**
Clamping moment (0,5 MPa)	**1100 Nm**
Weight (clamping arm not included)	**9,5 Kg**
Pneumatic supply ports	**G1/4 on both sides**
Sensor	**electronic (optical)**
Supply voltage	**10 ÷ 30 Vdc**
IP code	**IP65**

**The opening angle range may vary according to the arm position and style.*

COMPENSATION

LIGHTWEIGHT

IRREVERSIBLE

ANGLE ADJUSTMENT

OPTICAL SENSOR

CODIFICATION KEY

UC	B	M	80	**O**	**E**	**A**	**K**	0	
1	2	3	4	5	6	7	8	9	10

1 SERIES
UC = UNICLAMP Power clamps

2 STANDARD
B = European standard

3 VERSION
M = Pneumatic with hand lever

4 SIZE
80 = Ø 80 mm

5 ARM POSITION

V = 90°

O = 180°

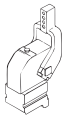

N = No arm

6 ARM STYLE
C = Central, 20 mm offset
D = Right, 20 mm offset
S = Left, 20 mm offset
E = Central, 45 mm offset
F = Right, 45 mm offset
L = Left, 45 mm offset
N = No arm
For other versions contact our Sales Dept.

7 ARM TYPE
A = Aluminium
S = Steel
N = No arm

8 SENSOR
N = No sensor (with protection plate)
K = Electronic sensor PNP, M12 (DF-K)
D = Pneumatic sensor (DF-UPNW80)
J = Electronic sensor NPN, optical (DF-J)
Y = Electronic sensor PNP, M12 (DF-Y) white LED

9 PRODUCT REVISION
Assigned by UNIVER

10 ATEX
X = ATEX option
See ATEX Catalogue for types and versions

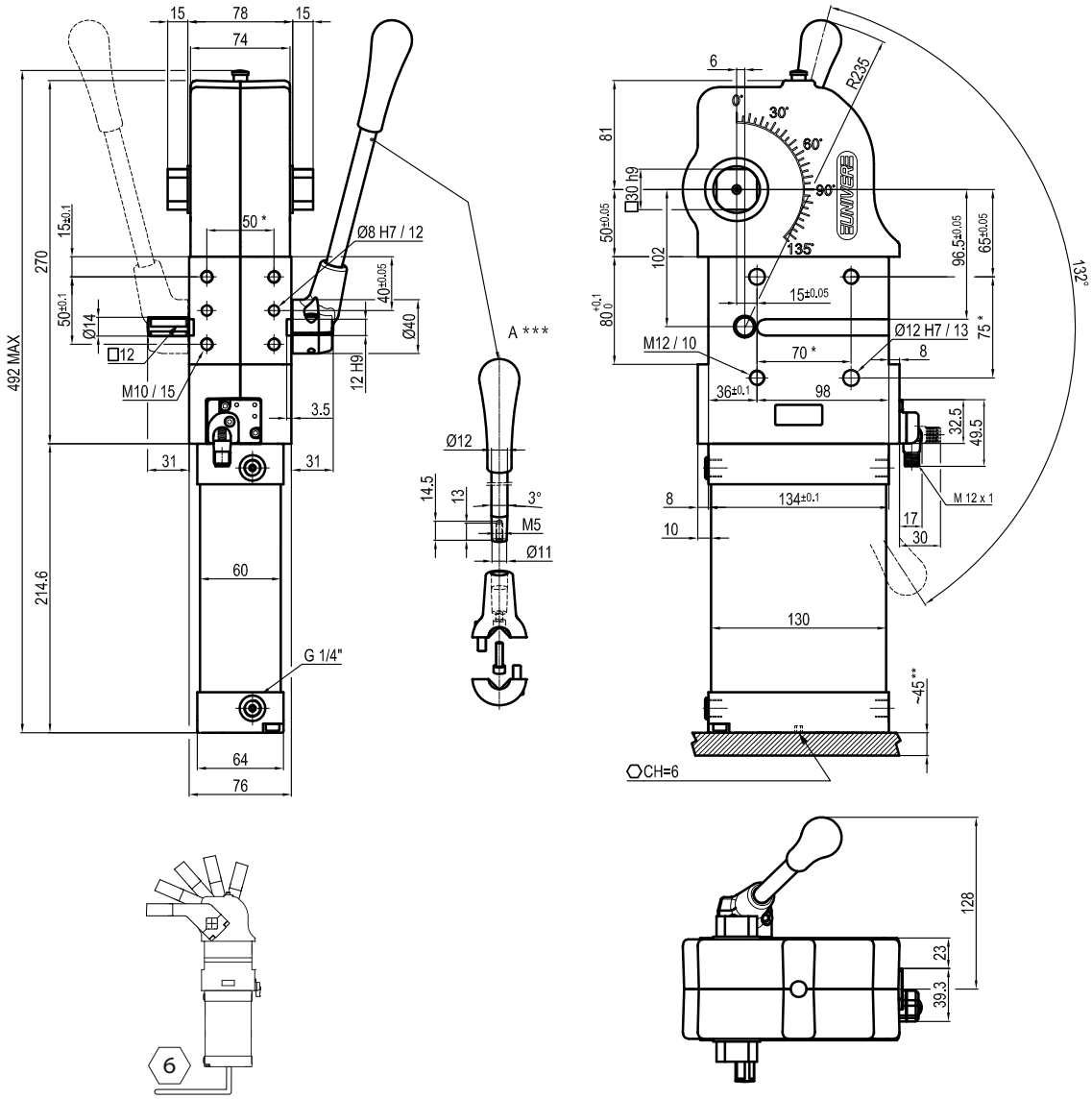

** TOLERANCE BETWEEN DOWELS ± 0,02, BETWEEN SCREW HOLES ± 0,1*
***AREA TO ACCESS ANGLE ADJUSTMENT*
****DIMENSION TO BE RESPECTED IN CASE OTHER MANUAL LEVERS ARE USED*

Maximum Applicable Load

Pressure: 5 bar - 90° cycle time (Open - Close)

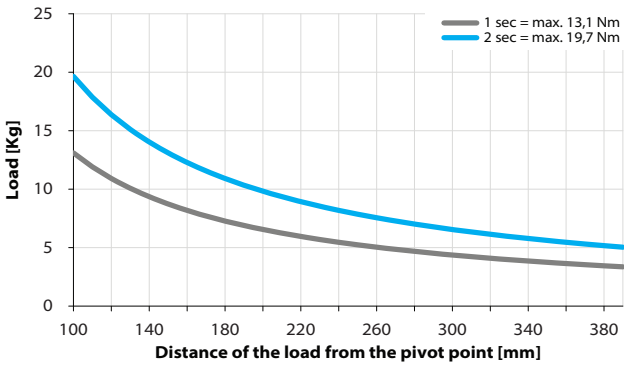

Air Consumption per Cycle

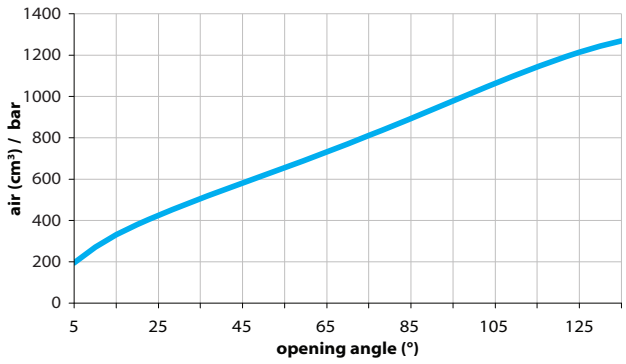

Clamping Arms

Arm Offset 20mm

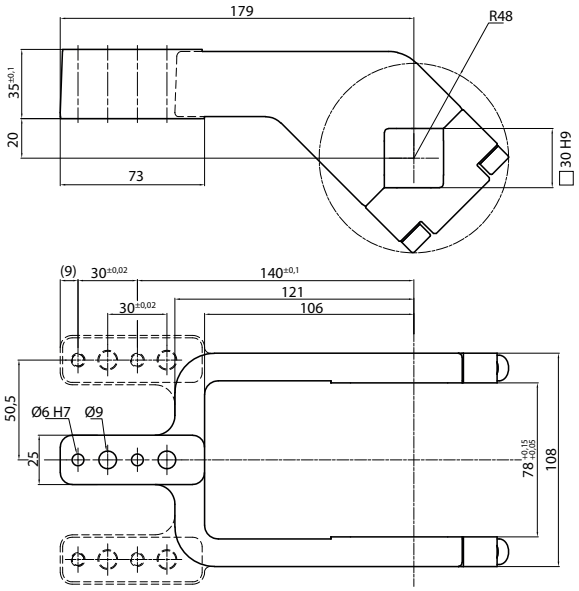

Arm Offset 45mm

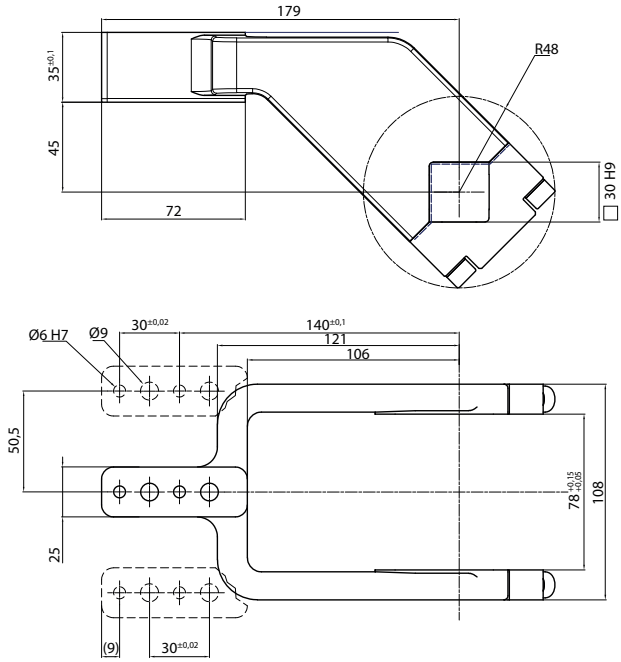

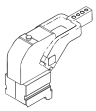

Armcode	Offset	Material	Arm style	Weight (Kg)	Opening angle (90°)	Opening angle (180°)
LKP80C	20	ALUMINIUM	CENTRAL	0,6	0÷135°	0÷105°
LKP80D	20	ALUMINIUM	RIGHT	0,6	0÷135°	0÷105°
LKP80S	20	ALUMINIUM	LEFT	0,6	0÷135°	0÷105°
UKP80CS	20	STEEL	CENTRAL	2,26	0÷135°	0÷105°
UKP80DS	20	STEEL	RIGHT	2,3	0÷135°	0÷105°
UKP80SS	20	STEEL	LEFT	2,3	0÷135°	0÷105°
UKP80E	45	ALUMINIUM	CENTRAL	0,6	0÷135°	0÷125°
UKP80F	45	ALUMINIUM	RIGHT	0,6	0÷135°	0÷125°
UKP80L	45	ALUMINIUM	LEFT	0,6	0÷135°	0÷125°
UKP80ES	45	STEEL	CENTRAL	2,2	0÷135°	0÷125°
UKP80FS	45	STEEL	RIGHT	2,2	0÷135°	0÷125°
UKP80LS	45	STEEL	LEFT	2,2	0÷135°	0÷125°

Sensors

Electronic (optical)

DF-K PNP M12
DF-J NPN M12
DF-Y PNP M12 White LED

Pneumatic

DF-UPNW80

Accessories

Handlever

UBF2580

Self holding system

UBK46P30

UCDP 40

Pneumatic power clamps Ø40 mm with double arm

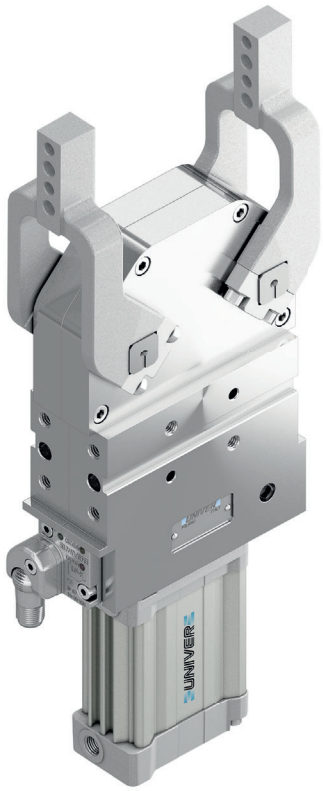

Pneumatic power clamps size Ø40mm with double arm, compensation system, toggle-joint mechanism and stepless adjustable opening angle, typically used for holding and positioning metal sheets or workpieces.

- Lightweight aluminium construction
- Compact dimensions
- Integrated compensation system up to 3 mm
- Fully optical electronic sensor
- Fixing pattern on 4 sides
- Clamping arm in aluminium or steel

CHARACTERISTICS

Operating temperature	**5° ÷ 45° C**
Min./Max. Operating pressure	**0,4 / 0,6 MPa**
Opening angle*	**0° ÷ 180°**
Bore Ø	**40 mm**
Clamping moment (0,5 MPa)	**55 Nm**
Weight (clamping arm not included)	**2,7 Kg**
Pneumatic supply ports	**G1/8 on both sides**
Sensor	**electronic (optical)**
Supply voltage	**10 ÷ 30 Vdc**
IP code	**IP65**

**The opening angle range may vary according to the arm position and style.*

COMPENSATION

LIGHTWEIGHT

IRREVERSIBLE

ANGLE ADJUSTMENT

OPTICAL SENSOR

COMPACT

CODIFICATION KEY

UC	D	P	40	**D**	**A**	**A**	**K**	0	
1	2	3	4	5	6	7	8	9	10

1 SERIES
UC = UNICLAMP Power clamps

2 STANDARD
D = With double arm

3 VERSION
P = Pneumatic

4 SIZE
40 = Ø 40 mm

5 ARM POSITION

D = Double arm

I = Double arm overturned (only 10mm offset)

N = No arm

6 ARM STYLE
A = Central, 10 mm offset
B = Right, 10 mm offset
G = Left, 10 mm offset
C = Central, 15 mm offset
D = Right, 15 mm offset
S = Left, 15 mm offset
E = Central, 45 mm offset
F = Right, 45 mm offset
L = Left, 45 mm offset
N = No arm
For other versions contact our Sales Dept.

7 ARM TYPE
A = Aluminium
S = Steel
N = No arm

8 SENSOR
N = No sensor (with protection plate)
K = Electronic sensor PNP, M12 (DF-K)
J = Electronic sensor NPN, optical (DF-J)
Y = Electronic sensor PNP, M12 (DF-Y) white LED

9 PRODUCT REVISION
Assigned by UNIVER

10 ATEX
X = ATEX option
See ATEX Catalogue for types and versions

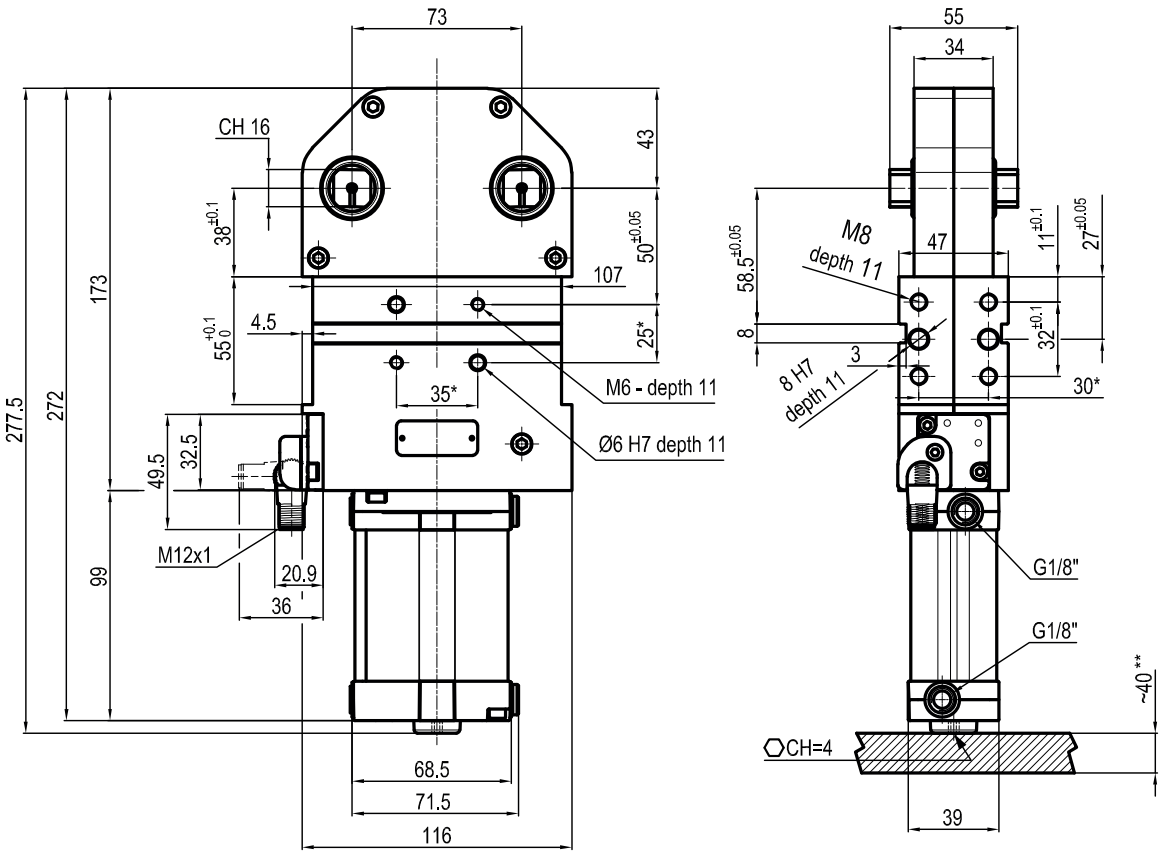

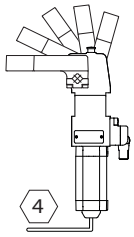

**TOLERANCE BETWEEN DOWELS ± 0,02 BETWEEN SCREW HOLES ±0,1*
***AREA TO ACCESS ANGLE ADJUSTMENT*

Air Consumption per Cycle

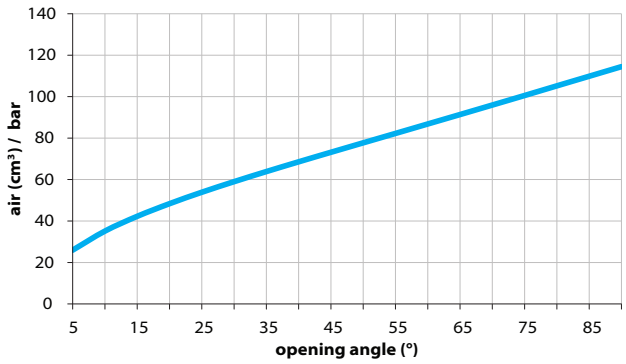

Clamping Arms

Arm Offset 10mm

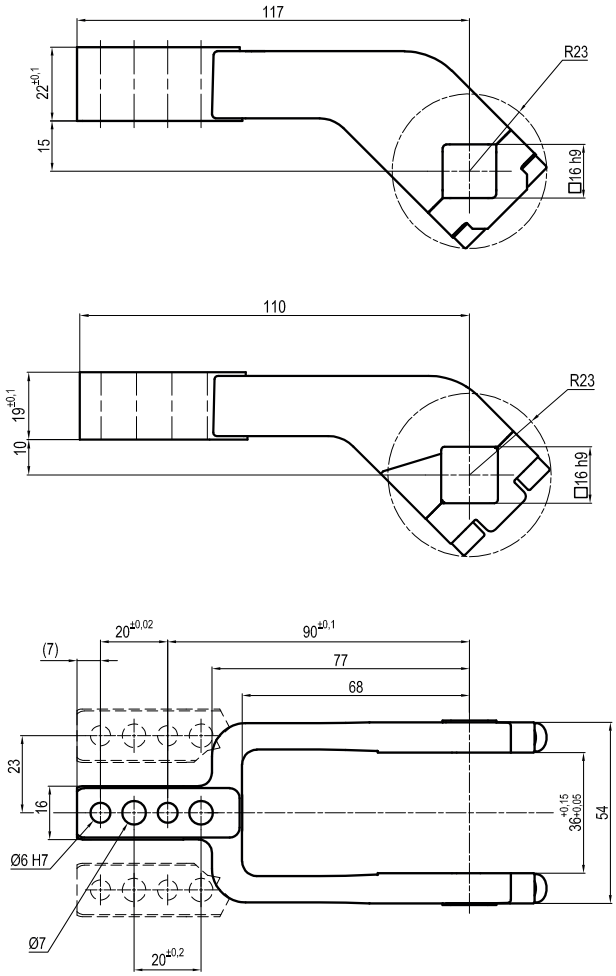

Arm Offset 45mm

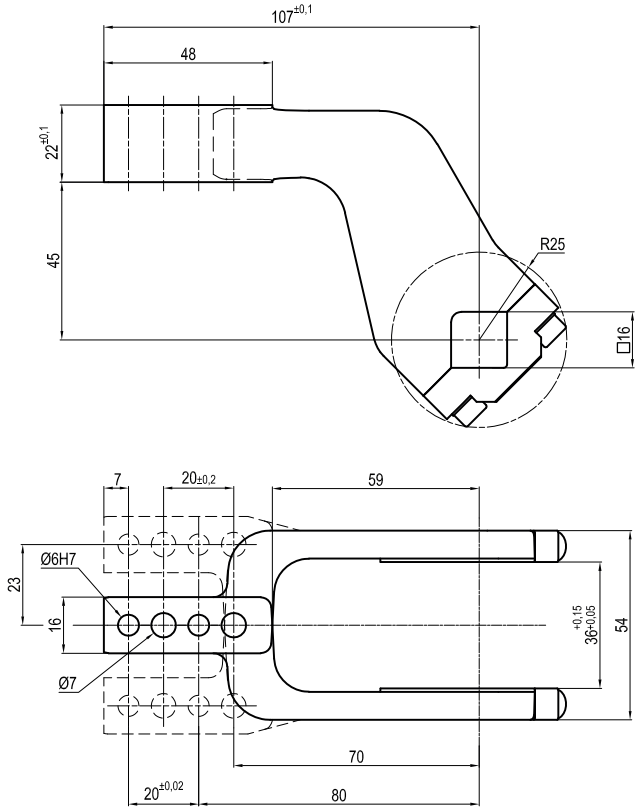

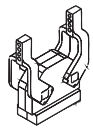

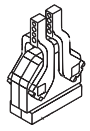

Armcode	Offset	Material	Arm style	Weight (Kg)	Opening angle	Opening angle
LKP40A	10	ALUMINIUM	CENTRAL	0,2	0÷180°	0÷180°
LKP40B	10	ALUMINIUM	RIGHT	0,2	0÷180°	0÷180°
LKP40G	10	ALUMINIUM	LEFT	0,2	0÷180°	0÷180°
LKP01CST	15	ALUMINIUM	CENTRAL	0,2	0÷180°	-
LKP01DST	15	ALUMINIUM	RIGHT	0,2	0÷180°	-
LKP01SST	15	ALUMINIUM	LEFT	0,2	0÷180°	-
IKP40E	45	ALUMINIUM	CENTRAL	0,3	0÷140°	-
IKP40F	45	ALUMINIUM	RIGHT	0,3	0÷140°	-
IKP40L	45	ALUMINIUM	LEFT	0,3	0÷140°	-

Sensors

Electronic (optical)

DF-K PNP M12
DF-J NPN M12
DF-Y PNP M12 White LED

UCDP 63

Pneumatic power clamps Ø63 mm with double arm

Pneumatic power clamps size Ø63 mm with double arm, compensation system, toggle-joint mechanism and stepless adjustable opening angle, typically used for holding and positioning metal sheets or workpieces.

- Lightweight aluminium construction
- Compact dimensions
- Integrated compensation system
- Fully optical electronic sensor
- Fixing pattern on 4 sides
- Clamping arm in aluminium or steel

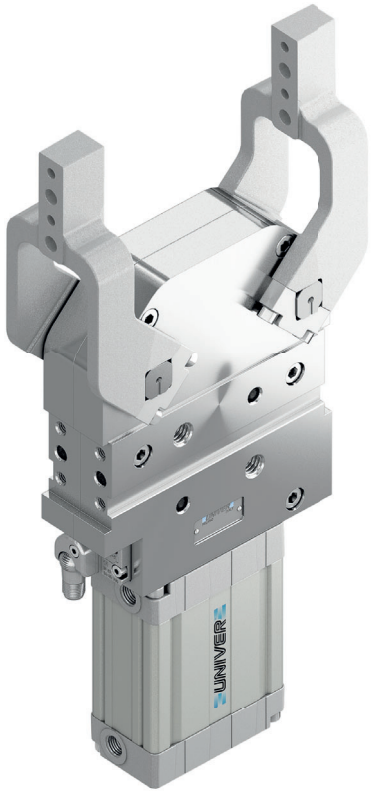

COMPENSATION

LIGHTWEIGHT

IRREVERSIBLE

ANGLE ADJUSTMENT

OPTICAL SENSOR

COMPACT

CHARACTERISTICS

Operating temperature	**5° ÷ 45° C**
Min./Max. Operating pressure	**0,4 / 0,6 MPa**
Opening angle*	**0° ÷ 180°**
Bore Ø	**63 mm**
Clamping moment (0,5 MPa)	**130 Nm**
Weight (clamping arm not included)	**4,6 Kg**
Pneumatic supply ports	**G1/4 on both sides**
Sensor	**electronic (optical)**
Supply voltage	**10 ÷ 30 Vdc**
IP code	**IP65**

**The opening angle range may vary according to the arm position and style.*

CODIFICATION KEY

UC	D	P	63	**D**	**C**	**A**	**K**	0	
1	2	3	4	5	6	7	8	9	10

1 SERIES
UC = UNICLAMP Power clamps

2 STANDARD
D = With double arm

3 VERSION
P = Pneumatic

4 SIZE
63 = Ø 63 mm

5 ARM POSITION

D = Double arm

I = Double arm overturned (only 15mm offset)

N = No arm

6 ARM STYLE
C = Central, 15 mm offset
D = Right, 15 mm offset
S = Left, 15 mm offset
E = Central, 45 mm offset
F = Right, 45 mm offset
L = Left, 45 mm offset
N = No arm
For other versions contact our Sales Dept.

7 ARM TYPE
A = Aluminium
S = Steel
N = No arm

8 SENSOR
N = No sensor (with protection plate)
K = Electronic sensor PNP, M12 (DF-K)
J = Electronic sensor NPN, optical (DF-J)
Y = Electronic sensor PNP, M12 (DF-Y) white LED

9 PRODUCT REVISION
Assigned by UNIVER

10 ATEX
X = ATEX option
See ATEX Catalogue for types and versions

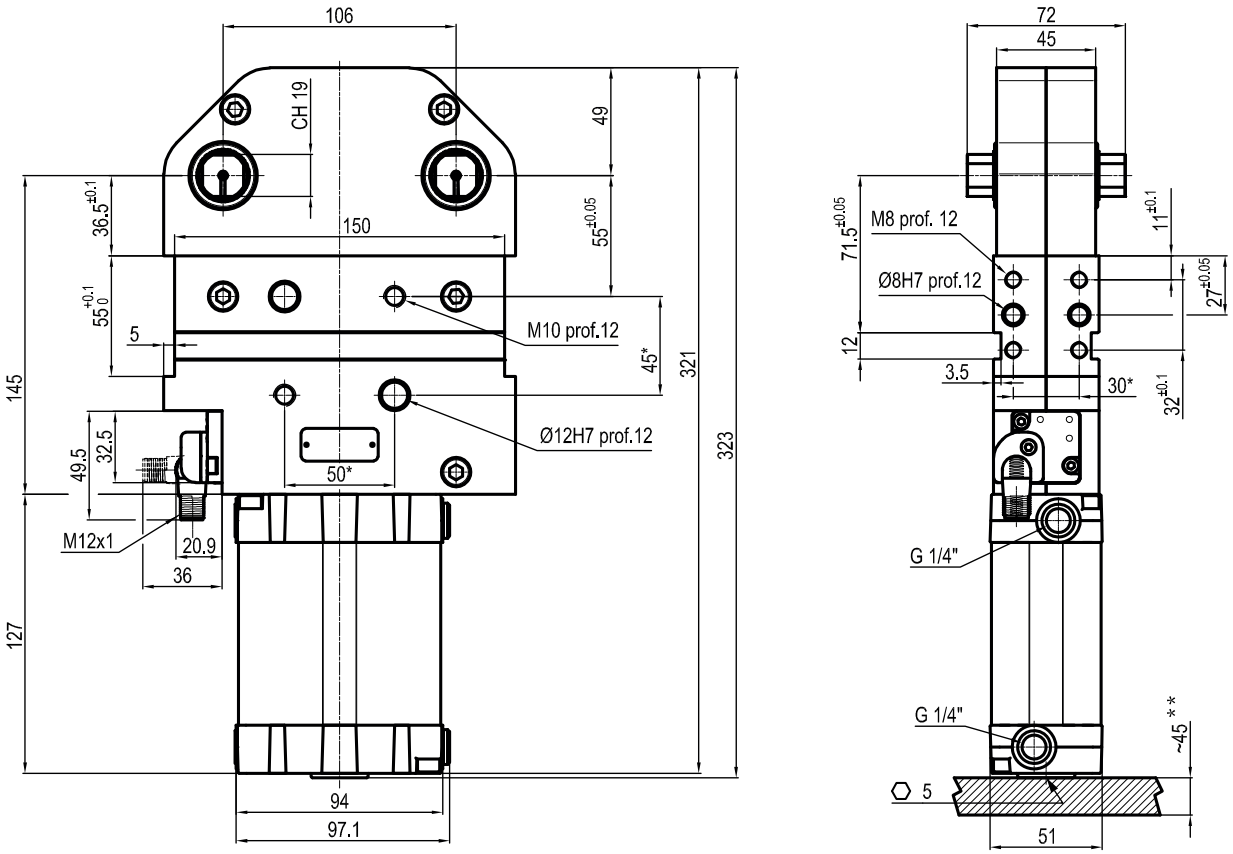

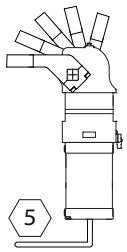

**TOLERANCE BETWEEN DOWELS ± 0,02 BETWEEN SCREW HOLES ± 0,1*
***AREA TO ACCESS ANGLE ADJUSTMENT*

Air Consumption per Cycle

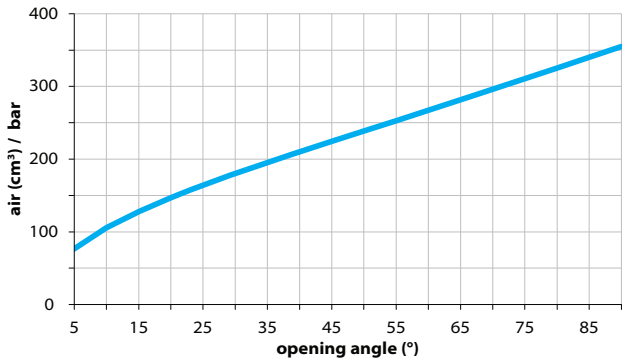

Clamping Arms

Arm Offset 15mm

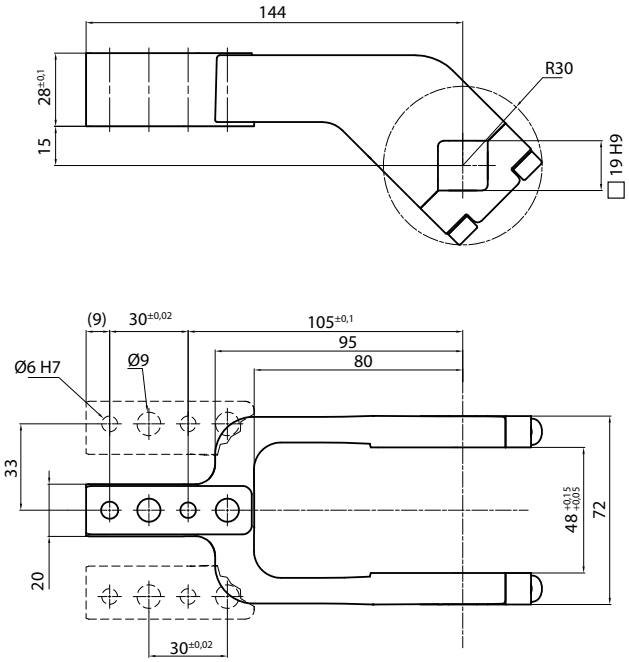

Arm Offset 45mm

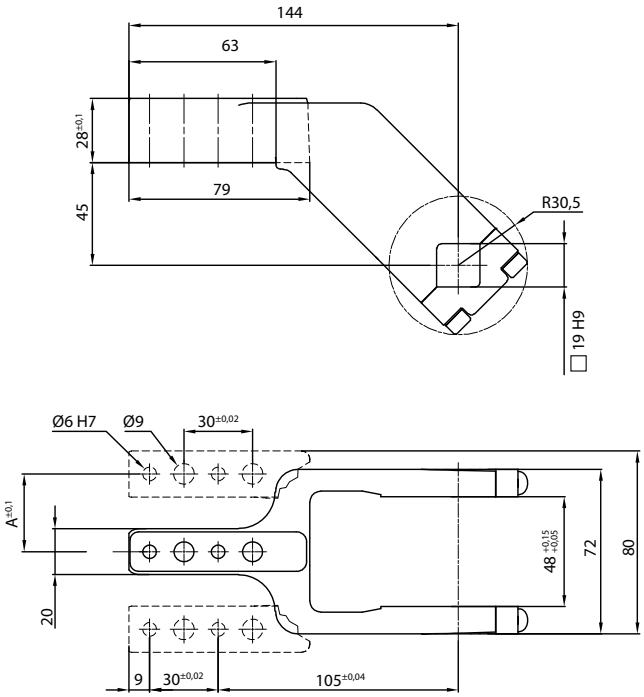

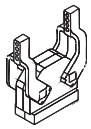

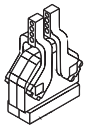

Armcode	Offset	Material	Arm style	Weight (Kg)	Opening angle	Opening angle
LKP00CL	15	ALUMINIUM	CENTRAL	0,4	0÷180°	0÷180°
LKP00DL	15	ALUMINIUM	RIGHT	0,4	0÷180°	0÷180°
LKP00SL	15	ALUMINIUM	LEFT	0,4	0÷180°	0÷180°
UP210151441G	15	STEEL	CENTRAL	0,8	0÷180°	0÷180°
UP210151442G	15	STEEL	RIGHT	0,8	0÷180°	0÷180°
UP210151443G	15	STEEL	LEFT	0,8	0÷180°	0÷180°
UKP5063E	45	ALUMINIUM	CENTRAL	0,45	0÷180°	-
UKP63F	45	ALUMINIUM	RIGHT	0,45	0÷180°	-
UKP63L	45	ALUMINIUM	LEFT	0,45	0÷180°	-
UKP5063ES	45	STEEL	CENTRAL	0,92	0÷180°	-
UKP63FS	45	STEEL	RIGHT	1,2	0÷180°	-
UKP63LS	45	STEEL	LEFT	1,2	0÷180°	-

Sensors

Electronic (optical)

DF-K PNP M12
DF-J NPN M12
DF-Y PNP M12 White LED

UCNP 50

Pneumatic power clamps conforming to the NAAMS standard, Ø50 mm

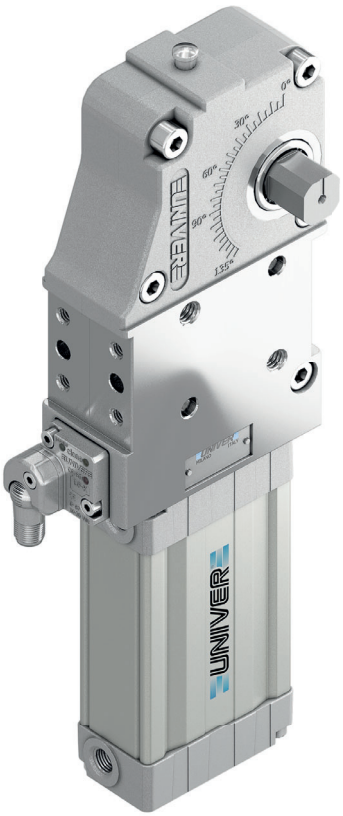

Pneumatic power clamps size Ø50 mm, conforming to the NAAMS standard, with compensation system, toggle-joint mechanism and stepless adjustable opening angle, typically used for handling and holding metal sheets in welding applications

- Lightweight aluminium construction
- Compact dimensions
- Integrated compensation system up to 1,7 mm
- Version with manual hand lever available
- Fully optical electronic sensor or pneumatic sensor
- Fixing pattern on 4 sides
- Manual unlocking in case of air loss
- Drive shaft for wishbone or blade arms
- NPT or GAS connections
- Self-holding system for open position available

GLOBAL STANDARD COMPONENTS NAAMS

COMPENSATION

LIGHTWEIGHT

IRREVERSIBLE

ANGLE ADJUSTMENT

OPTICAL SENSOR

COMPACT

CHARACTERISTICS

Operating temperature	**5° ÷ 45° C**
Min./Max. operating pressure	**0,4/0,6 Mpa**
Opening angle*	**0° ÷ 135°**
Bore Ø	**50 mm**
Holding moment	**1250 Nm**
Clamping moment (0,5 MPa)	**280 Nm**
Weight (clamping arm not included)	**2,7 Kg**
Pneumatic supply ports	**1/4 on both sides**
Sensor	**electronic (optical)**
Supply voltage	**10 ÷ 30 Vdc**
IP code	**IP65**

**The opening angle range may vary according to the arm position and style.*

CODIFICATION KEY

UC	N	P	50	N	**N**	**K**	**G**	0	
1	2	3	4	5	6	7	8	9	10

1 SERIES
UC = UNICLAMP Power clamps

2 STANDARD
N = NAAMS Standard

3 VERSION
P = Pneumatic

4 SIZE
50 = Ø 50 mm

5 ARM POSITION
N = No arm

For clamping arms according to NAAMS standard, please contact our Sales Dept.

6 SQUARE SHAFT
R = Right side only
L = Left side only
N = Both sides

7 SENSOR
N = No sensor (with protection plate)
K = Electronic sensor PNP, M12 (DF-K)
D = Pneumatic sensor (DF-UPNW)
J = Electronic sensor NPN, optical (DF-J)
Y = Electronic sensor PNP, M12 (DF-Y) white LED

8 PORT THREAD
G = Gas
N = NPT

9 PRODUCT REVISION
Assigned by UNIVER

10 ATEX
X = ATEX option
See ATEX Catalogue for types and versions

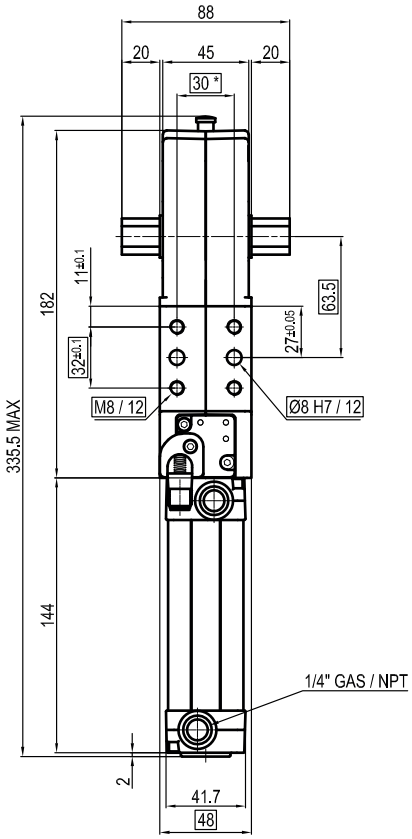

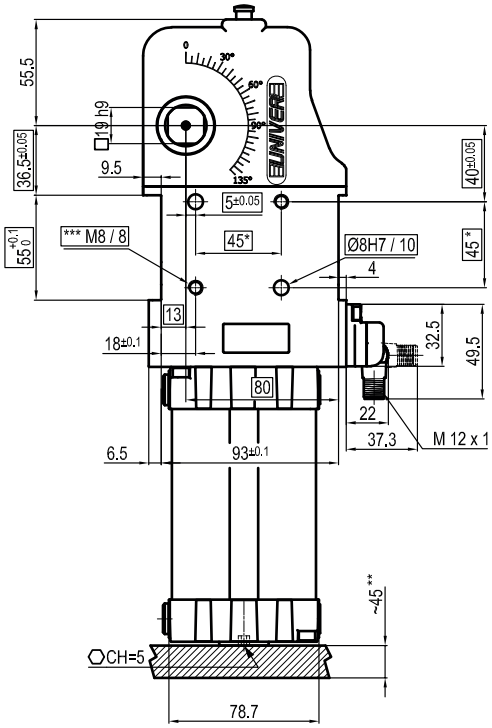

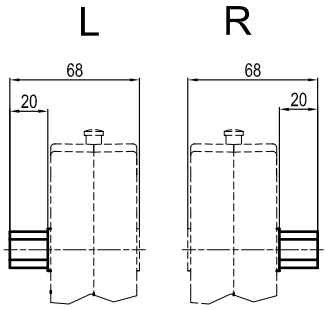

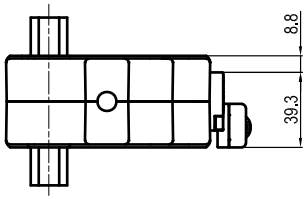

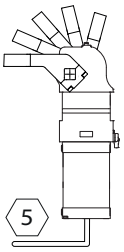

**TOLERANCE BETWEEN DOWELS ±0,02 BETWEEN SCREW HOLES ± 0,1*
***AREA TO ACCESS ANGLE ADJUSTMENT*
****SCREW THREAD INSERT*

Maximum Applicable Load

Pressure: 5 bar - 90° cycle time (Open - Close)

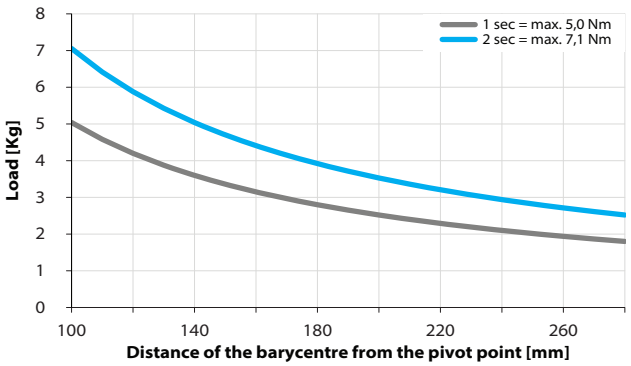

Air Consumption per Cycle

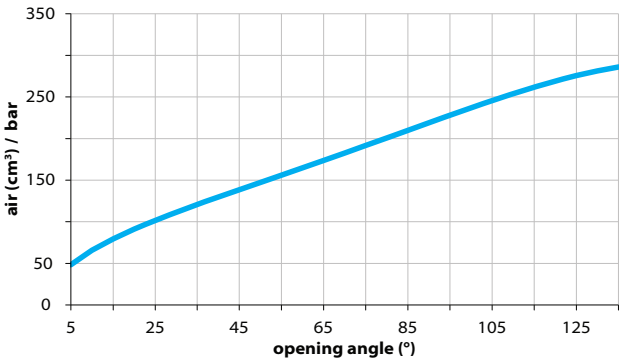

Sensors

Electronic (optical)

DF-K PNP M12
DF-J NPN M12
DF-Y PNP M12 White LED

Pneumatic

DF-UPNW

Accessories

Self holding system

UBK46P19N For blade arms
UBK46P19ND For wishbone arms

UCNP 63

Pneumatic power clamps conforming to the NAAMS standard, Ø63 mm

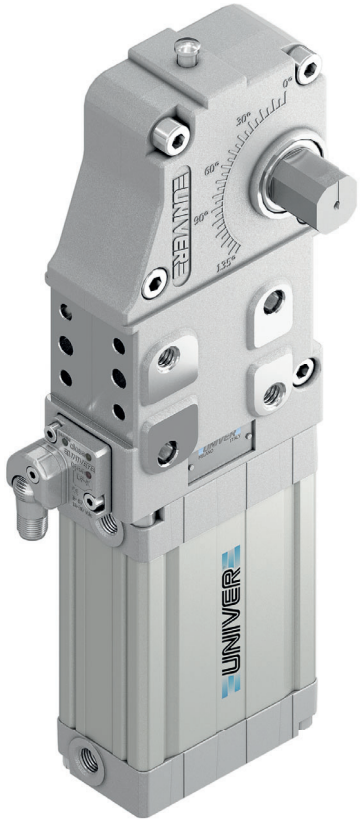

Pneumatic power clamps size Ø63 mm conforming to the NAAMS standard with compensation system, toggle-joint mechanism and stepless adjustable opening angle, typically used for handling and holding metal sheets in welding applications

- Lightweight aluminium construction
- Compact dimensions
- Integrated compensation system up to 2,7 mm
- Version with manual hand lever available
- Fully optical electronic sensor or pneumatic sensor
- Fixing pattern on 4 sides
- Manual unlocking in case of air loss
- Drive shaft for wishbone or blade arms
- NPT or GAS connections
- Self-holding system for open position available

GLOBAL STANDARD COMPONENTS NAAMS

CHARACTERISTICS

Operating temperature	**5° ÷ 45° C**
Min./Max. operating pressure	**0,4/0,6 Mpa**
Opening angle*	**0° ÷ 135°**
Bore Ø	**63 mm**
Holding moment	**1750 Nm**
Clamping moment (0,5 MPa)	**420 Nm**
Weight (clamping arm not included)	**3,1 Kg**
Pneumatic supply ports	**1/4 on both sides**
Sensor	**electronic (optical)**
Supply voltage	**10 ÷ 30 Vdc**
IP code	**IP65**

**The opening angle range may vary according to the arm position and style.*

COMPENSATION

LIGHTWEIGHT

IRREVERSIBLE

ANGLE ADJUSTMENT

OPTICAL SENSOR

COMPACT

CODIFICATION KEY

UC	N	P	63	N	**N**	**K**	**G**	0	
1	2	3	4	5	6	7	8	9	10

1 SERIES
UC = UNICLAMP Power clamps

2 STANDARD
N = NAAMS Standard

3 VERSION
P = Pneumatic

4 SIZE
63 = Ø 63 mm

5 ARM POSITION
N = No arm

For clamping arms according to NAAMS standard, please contact our Sales Dept.

6 SQUARE SHAFT
R = Right side only
L = Left side only
N = Both sides

7 SENSOR
N = No sensor (with protection plate)
K = Electronic sensor PNP, M12 (DF-K)
D = Pneumatic sensor (DF-UPNW)
J = Electronic sensor NPN, optical (DF-J)
Y = Electronic sensor PNP, M12 (DF-Y) white LED

8 PORT THREAD
G = Gas
N = NPT

9 PRODUCT REVISION
Assigned by UNIVER

10 ATEX
X = ATEX option
See ATEX Catalogue for types and versions

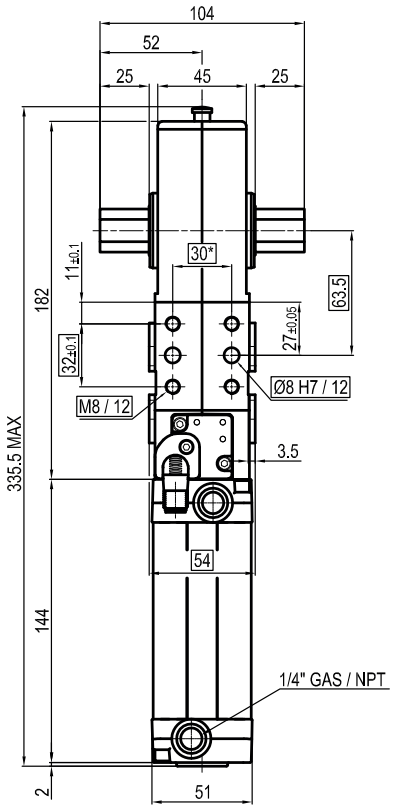

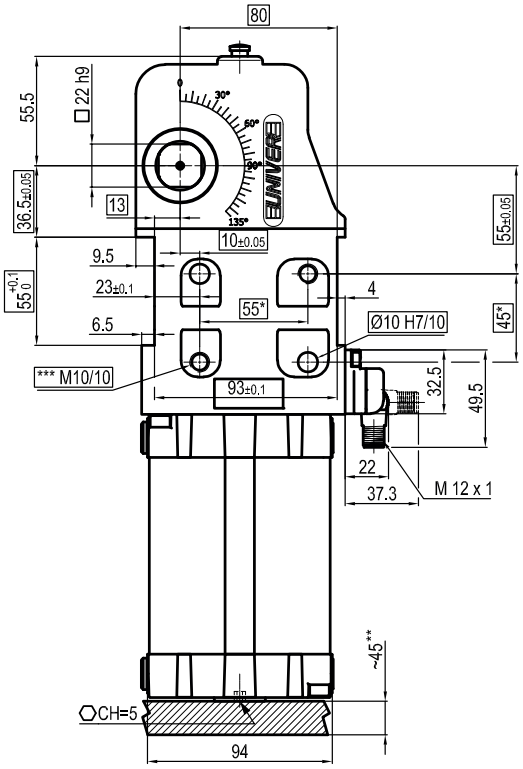

L R

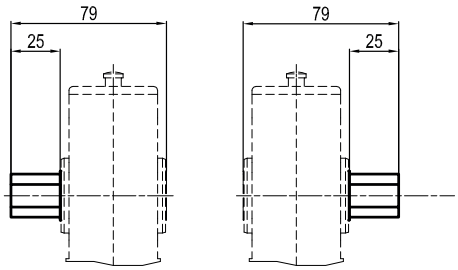

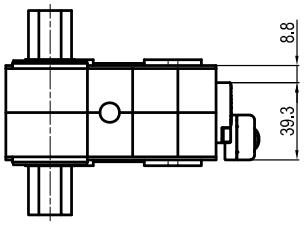

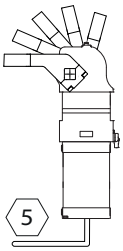

**TOLERANCE BETWEEN DOWELS ± 0,02 BETWEEN SCREW HOLES ± 0,1*
***AREA TO ACCESS ANGLE ADJUSTMENT*
****SCREW THREAD INSERT*

Maximum Applicable Load

Pressure: 5 bar - 90° cycle time (Open - Close)

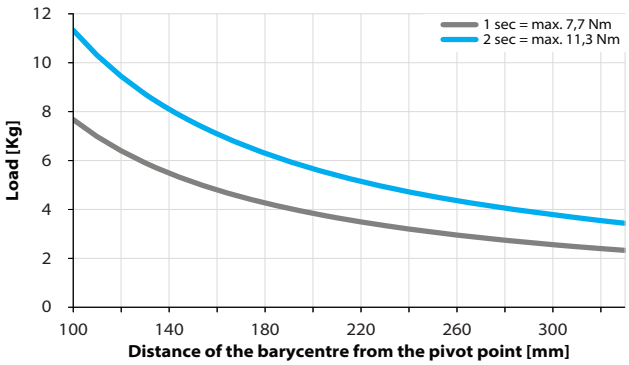

Air Consumption per Cycle

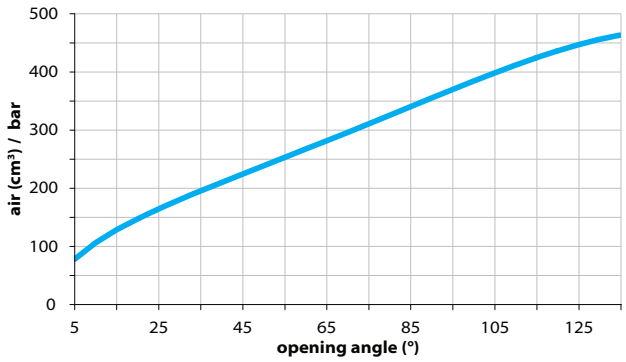

Sensors

Electronic (optical)

DF-K PNP M12
DF-J NPN M12
DF-Y PNP M12 White LED

Pneumatic

DF-UPNW

Accessories

Self holding system

UBK46P22N For blade arms
UBK46P22ND For wishbone arms

UCNP 80

Pneumatic power clamps conforming to the NAAMS standard, Ø80 mm

Pneumatic power clamps size Ø80 mm conforming to the NAAMS standard with compensation system, toggle-joint mechanism and stepless adjustable opening angle, typically used for handling and holding metal sheets in welding applications

- Lightweight aluminium construction
- Integrated compensation system up to 2,9 mm
- Version with manual hand lever available
- Fully optical electronic sensor or pneumatic sensor
- Fixing pattern on 4 sides
- Manual unlocking in case of air loss
- Drive shaft for wishbone or blade arms
- NPT or GAS connections
- Self-holding system for open position available

GLOBAL STANDARD COMPONENTS NAAMS

COMPENSATION

LIGHTWEIGHT

IRREVERSIBLE

ANGLE ADJUSTMENT

OPTICAL SENSOR

CHARACTERISTICS

Operating temperature	**5° ÷ 45° C**
Min./Max. operating pressure	**0,4/0,6 Mpa**
Opening angle*	**0° ÷ 135°**
Bore Ø	**80 mm**
Holding moment	**4000 Nm**
Clamping moment (0,5 MPa)	**1100 Nm**
Weight (clamping arm not included)	**8,6 Kg**
Pneumatic supply ports	**1/4 on both sides**
Sensor	**electronic (optical)**
Supply voltage	**10 ÷ 30 Vdc**
IP code	**IP65**

**The opening angle range may vary according to the arm position and style.*

CODIFICATION KEY

UC	N	P	80	N	**N**	**K**	**G**	0	
1	2	3	4	5	6	7	8	9	10

1 SERIES
UC = UNICLAMP Power clamps

2 STANDARD
N = NAAMS Standard

3 VERSION
P = Pneumatic

4 SIZE
80 = Ø 80 mm

5 ARM POSITION
N = No arm

For clamping arms according to NAAMS standard, please contact our Sales Dept.

6 SQUARE SHAFT
R = Right side only
L = Left side only
N = Both sides

7 SENSOR
N = No sensor (with protection plate)
K = Electronic sensor PNP, M12 (DF-K)
D = Pneumatic sensor (DF-UPNW80)
J = Electronic sensor NPN, optical (DF-J)
Y = Electronic sensor PNP, M12 (DF-Y) white LED

8 PORT THREAD
G = Gas
N = NPT

9 PRODUCT REVISION
Assigned by UNIVER

10 ATEX
X = ATEX option
See ATEX Catalogue for types and versions

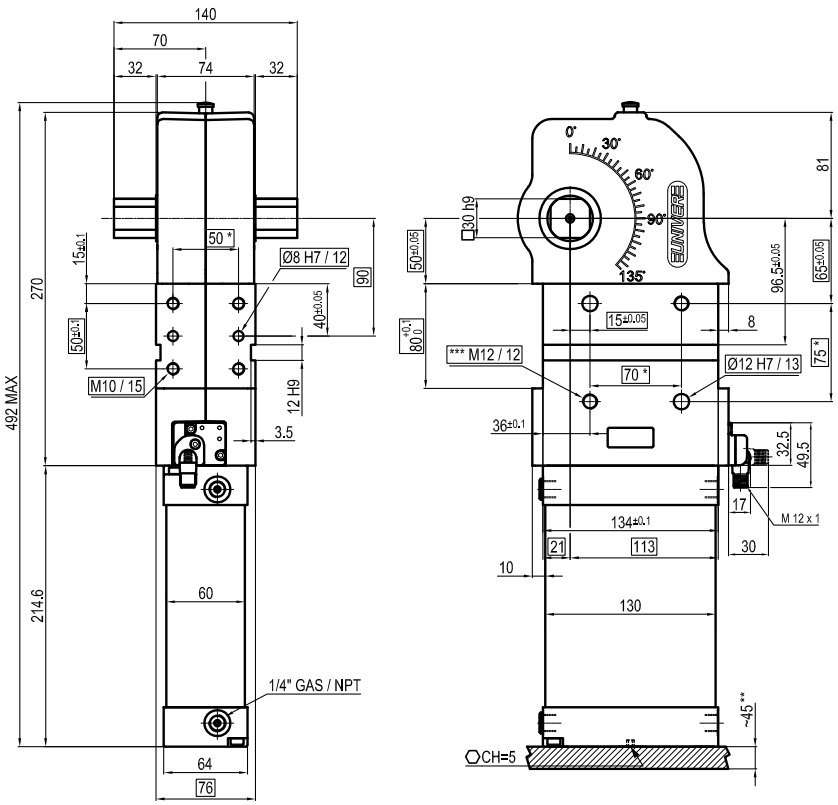

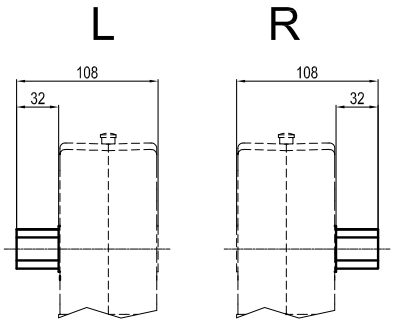

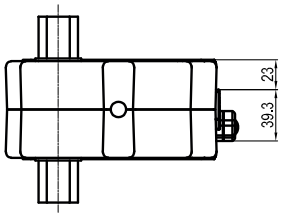

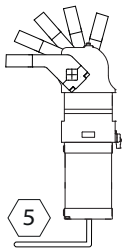

**TOLERANCE BETWEEN DOWELS ± 0,02 BETWEEN SCREW HOLES ± 0,1*
***AREA TO ACCESS ANGLE ADJUSTMENT*
****SCREW THREAD INSERT*

Maximum Applicable Load

Pressure: 5 bar - 90° cycle time (Open - Close)

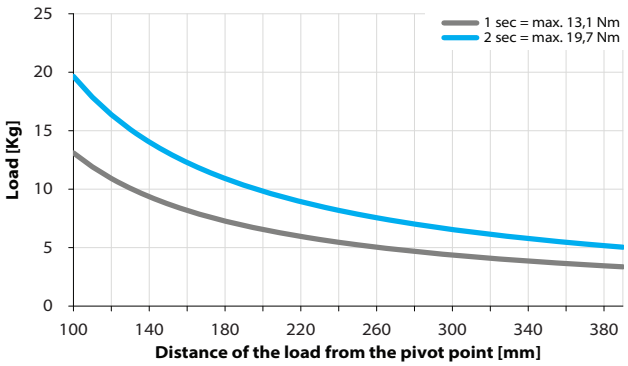

Air Consumption per Cycle

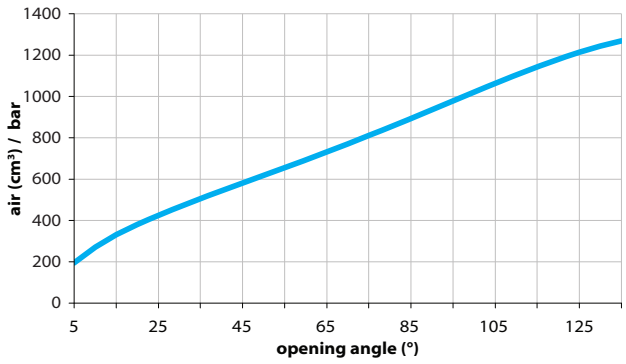

Sensors

Electronic (optical)

DF-K PNP M12
DF-J NPN M12
DF-Y PNP M12 White LED

Pneumatic

DF-UPNW80

Accessories

Self holding system

UBK46P30N For blade arms
UBK46P30ND For wishbone arms

UCNM 50

Pneumatic power clamps conforming to the NAAMS standard, Ø50 mm with hand lever

Pneumatic power clamps size Ø50 mm, conforming to the NAAMS standard with hand lever, compensation system, toggle-joint mechanism and stepless adjustable opening angle, typically used for handling and holding metal sheets in welding applications

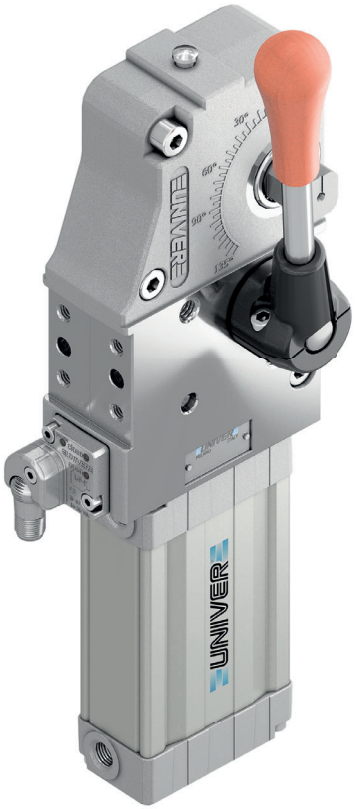

- Lightweight aluminium construction and compact dimensions
- Integrated compensation system up to 1,7 mm
- Hand lever mount on both sides
- Fully optical electronic sensor or pneumatic sensor
- Fixing pattern on 4 sides
- Manual unlocking in case of air loss
- Drive shaft for wishbone or blade arms
- NPT or GAS connections
- Self-holding system for open position available

GLOBAL STANDARD COMPONENTS NAAMS

COMPENSATION

LIGHTWEIGHT

IRREVERSIBLE

ANGLE ADJUSTMENT

OPTICAL SENSOR

COMPACT

CHARACTERISTICS

Operating temperature	**5° ÷ 45° C**
Min./Max. operating pressure	**0,4/0,6 Mpa**
Opening angle*	**0° ÷ 135°**
Bore Ø	**50 mm**
Holding moment	**1250 Nm**
Clamping moment (0,5 MPa)	**280 Nm**
Weight (clamping arm not included)	**3,4 Kg**
Pneumatic supply ports	**1/4 on both sides**
Sensor	**electronic (optical)**
Supply voltage	**10 ÷ 30 Vdc**
IP code	**IP65**

**The opening angle range may vary according to the arm position and style.*

CODIFICATION KEY

UC	N	M	50	N	**N**	**K**	**G**	0	
1	2	3	4	5	6	7	8	9	10

1 SERIES
UC = UNICLAMP Power clamps

2 STANDARD
N = NAAMS Standard

3 VERSION
M = Pneumatic with hand lever

4 SIZE
50 = Ø 50 mm

5 ARM POSITION
N = No arm

For clamping arms according to NAAMS standard, please contact our Sales Dept.

6 SQUARE SHAFT
R = Right side only
L = Left side only
N = Both sides

7 SENSOR
N = No sensor (with protection plate)
K = Electronic sensor PNP, M12 (DF-K)
D = Pneumatic sensor (DF-UPNW)
J = Electronic sensor NPN, optical (DF-J)
Y = Electronic sensor PNP, M12 (DF-Y) white LED

8 PORT THREAD
G = Gas
N = NPT

9 PRODUCT REVISION
Assigned by UNIVER

10 ATEX
X = ATEX option
See ATEX Catalogue for types and versions

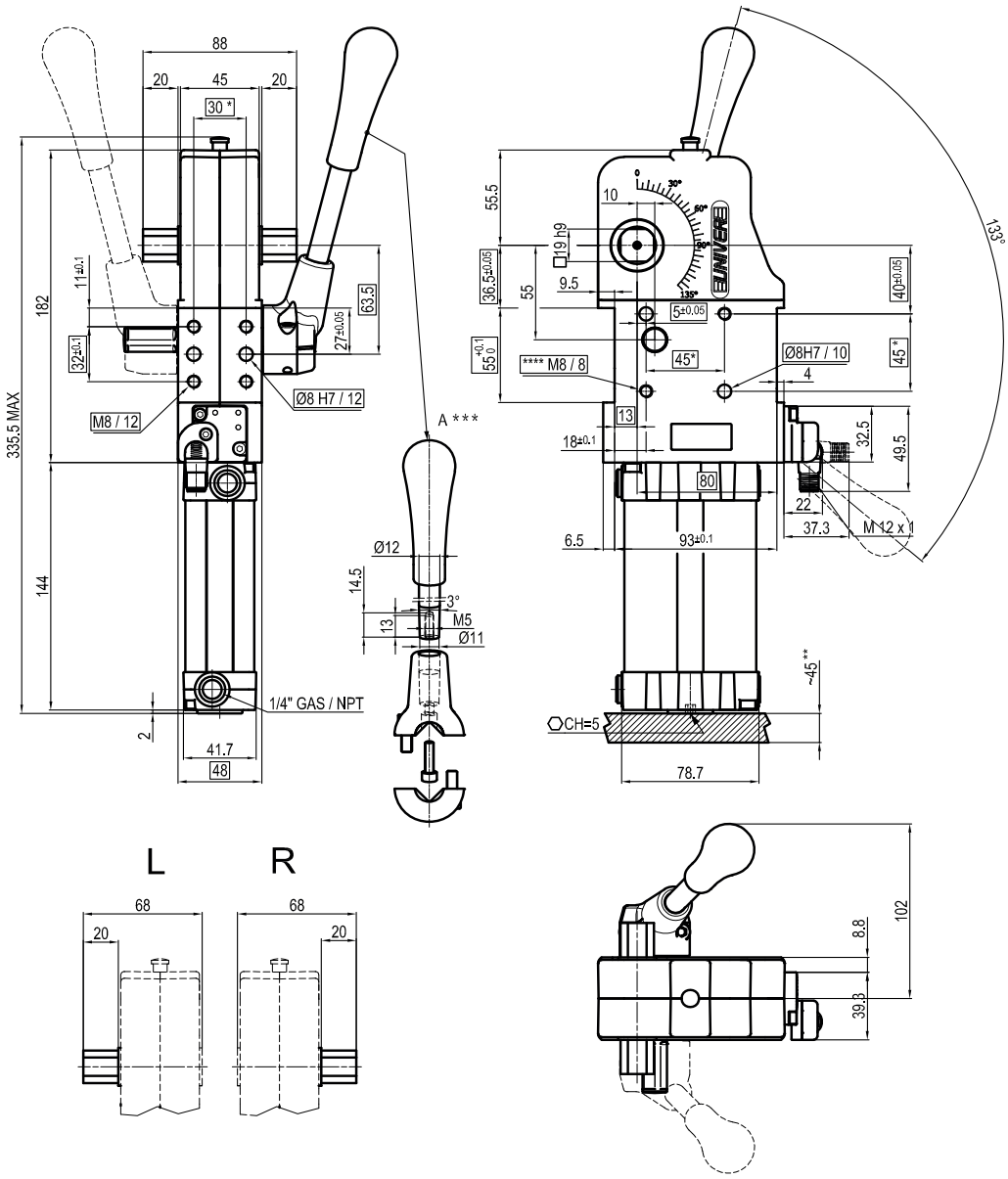

**TOLERANCE BETWEEN DOWELS ± 0,02 BETWEEN SCREW HOLES ± 0,1*
***AREA TO ACCESS ANGLE ADJUSTMENT*
****DIMENSIONS TO BE RESPECTED IN CASE OTHER MANUAL LEVERS ARE USED*
*****SCREW THREAD INSERT*

Maximum Applicable Load

Pressure: 5 bar - 90° cycle time (Open - Close)

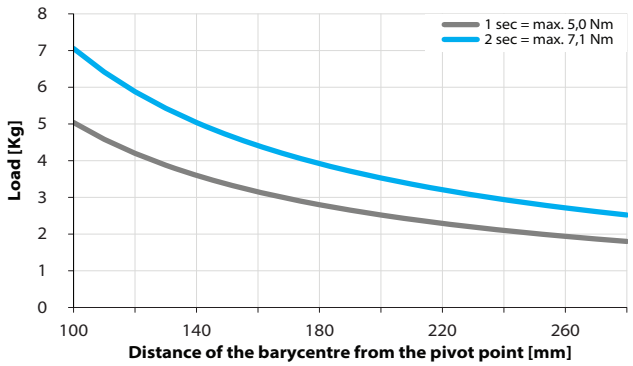

Air Consumption per Cycle

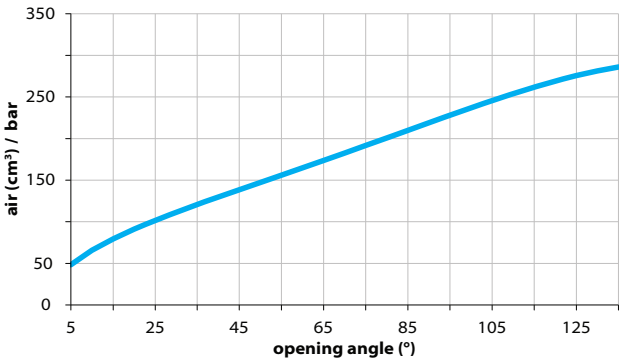

Sensors

Electronic (optical)

DF-K PNP M12
DF-J NPN M12
DF-Y PNP M12 White LED

Pneumatic

DF-UPNW80

Accessories

Handlever

UBF255063

Self holding system

UBK46P19N For blade arms
UBK46P19ND For wishbone arms

UCNM 63

Pneumatic power clamps conforming to the NAAMS standard, Ø63 mm with hand lever

Pneumatic power clamps size Ø63 mm, conforming to the NAAMS standard with hand lever, compensation system, toggle-joint mechanism and stepless adjustable opening angle, typically used for handling and holding metal sheets in welding applications

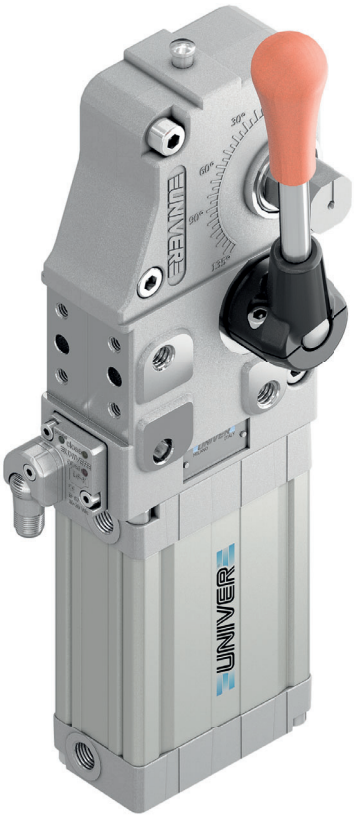

GLOBAL STANDARD COMPONENTS
NAAMS

- Lightweight aluminium construction and compact dimensions
- Integrated compensation system up to 2,7 mm
- Hand lever mount on both sides
- Fully optical electronic sensor or pneumatic sensor
- Fixing pattern on 4 sides
- Manual unlocking in case of air loss
- Drive shaft for wishbone or blade arms
- NPT or GAS connections
- Self-holding system for open position available

CHARACTERISTICS

Operating temperature	**5° ÷ 45° C**
Min./Max. operating pressure	**0,4/0,6 Mpa**
Opening angle*	**0° ÷ 135°**
Bore Ø	**63 mm**
Holding moment	**1750 Nm**
Clamping moment (0,5 MPa)	**420 Nm**
Weight (clamping arm not included)	**3,8 Kg**
Pneumatic supply ports	**G1/4 on both sides**
Sensor	**electronic (optical)**
Supply voltage	**10 ÷ 30 Vdc**
IP code	**IP65**

**The opening angle range may vary according to the arm position and style.*

COMPENSATION

LIGHTWEIGHT

IRREVERSIBLE

ANGLE ADJUSTMENT

OPTICAL SENSOR

COMPACT

CODIFICATION KEY

UC	N	M	63	N	**N**	**K**	**G**	0	
1	2	3	4	5	6	7	8	9	10

1 SERIES
UC = UNICLAMP Power clamps

2 STANDARD
N = NAAMS Standard

3 VERSION
M = Pneumatic with hand lever

4 SIZE
63 = Ø 63 mm

5 ARM POSITION
N = No arm

For clamping arms according to NAAMS standard, please contact our Sales Dept.

6 SQUARE SHAFT
R = Right side only
L = Left side only
N = Both sides

7 SENSOR
N = No sensor (with protection plate)
K = Electronic sensor PNP, M12 (DF-K)
D = Pneumatic sensor (DF-UPNW)
J = Electronic sensor NPN, optical (DF-J)
Y = Electronic sensor PNP, M12 (DF-Y) white LED

8 PORT THREAD
G = Gas
N = NPT

9 PRODUCT REVISION
Assigned by UNIVER

10 ATEX
X = ATEX option
See ATEX Catalogue for types and versions

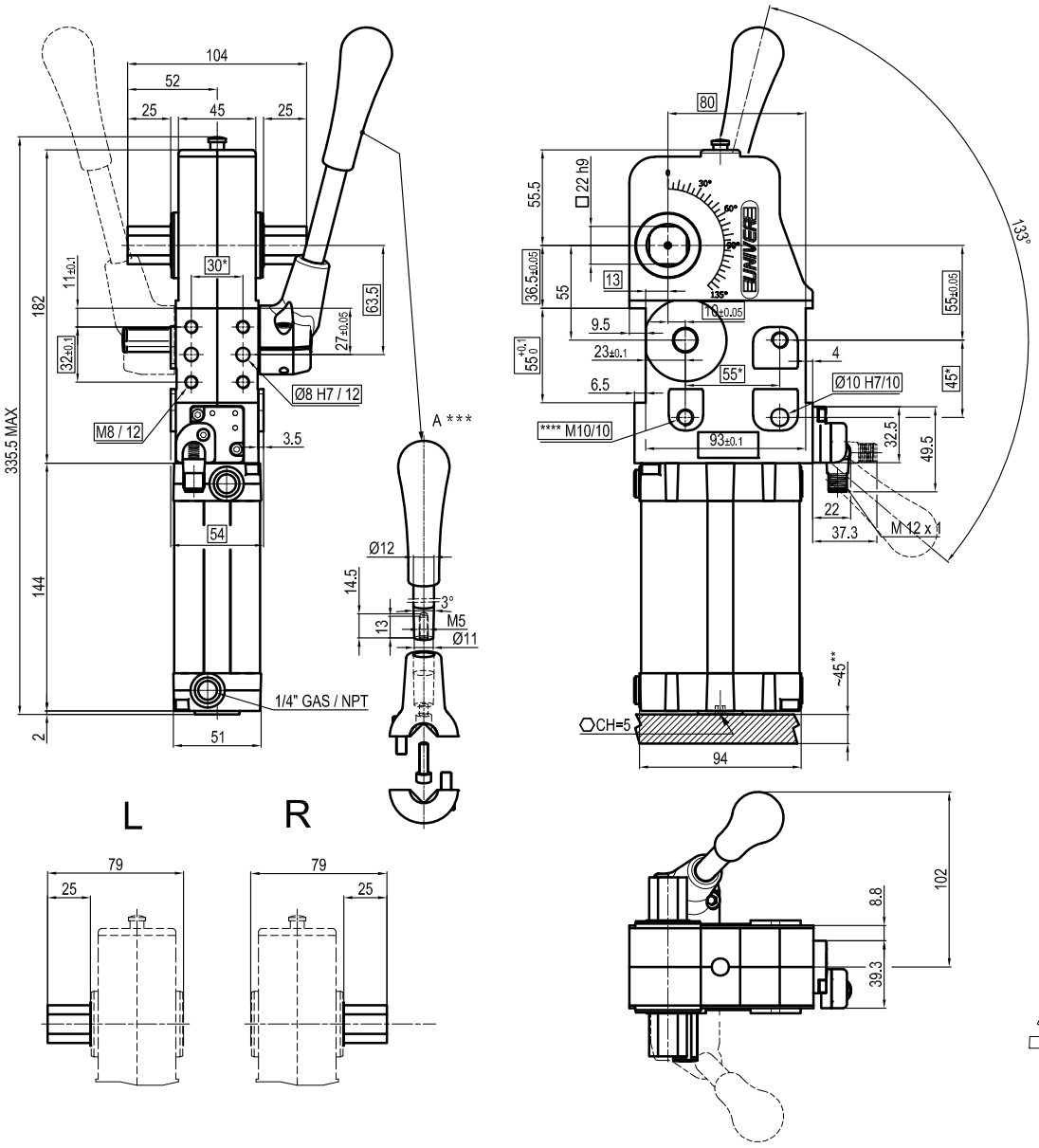

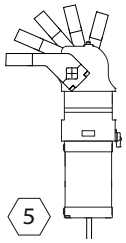

**TOLERANCE BETWEEN DOWELS ± 0,02 BETWEEN SCREW HOLES ± 0,1*
***AREA TO ACCESS ANGLE ADJUSTMENT*
****DIMENSIONS TO BE RESPECTED IN CASE OTHER MANUAL LEVERS ARE USED*
*****SCREW THREAD INSERT*

Maximum Applicable Load

Pressure: 5 bar - 90° cycle time (Open - Close)

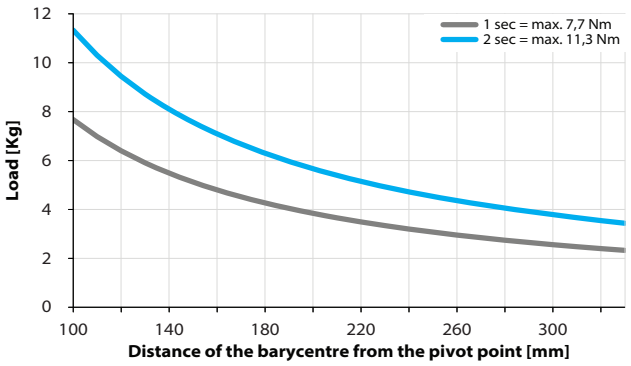

Air Consumption per Cycle

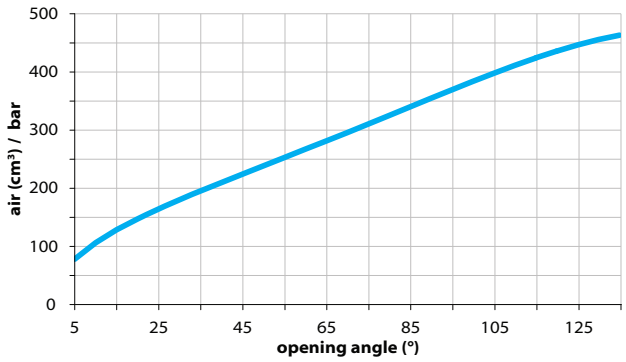

Sensors

Electronic (optical)

DF-K PNP M12
DF-J NPN M12
DF-Y PNP M12 White LED

Pneumatic

DF-UPNW

Accessories

Handlever

UBF255063

Self holding system

UBK46P22N For blade arms
UBK46P22ND For wishbone arms

UCNM 80

Pneumatic power clamps conforming to the NAAMS standard, Ø80 mm with hand lever

Pneumatic power clamps size Ø80 mm, conforming to the NAAMS standard with hand lever, compensation system, toggle-joint mechanism and stepless adjustable opening angle, typically used for handling and holding metal sheets in welding applications

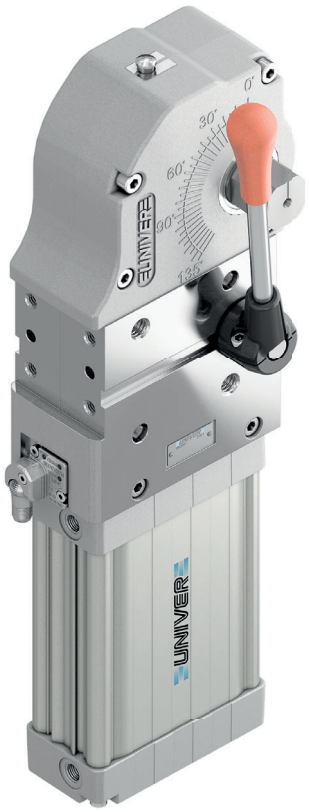

- Lightweight aluminium construction
- Integrated compensation system up to 2,9 mm
- Hand lever mount on both sides
- Fully optical electronic sensor or pneumatic sensor
- Fixing pattern on 4 sides
- Manual unlocking in case of air loss
- Drive shaft for wishbone or blade arms
- NPT or GAS connections
- Self-holding system for open position available

GLOBAL STANDARD COMPONENTS NAAMS

COMPENSATION

LIGHTWEIGHT

IRREVERSIBLE

ANGLE ADJUSTMENT

OPTICAL SENSOR

CHARACTERISTICS

Operating temperature	**5° ÷ 45° C**
Min./Max. operating pressure	**0,4/0,6 Mpa**
Opening angle*	**0° ÷ 135°**
Bore Ø	**80 mm**
Holding moment	**4000 Nm**
Clamping moment (0,5 MPa)	**1100 Nm**
Weight (clamping arm not included)	**9,5 Kg**
Pneumatic supply ports	**G1/4 on both sides**
Sensor	**electronic (optical)**
Supply voltage	**10 ÷ 30 Vdc**
IP code	**IP65**

**The opening angle range may vary according to the arm position and style.*

CODIFICATION KEY

UC	N	M	80	N	**N**	**K**	**G**	0	
1	2	3	4	5	6	7	8	9	10

1 SERIES
UC = UNICLAMP Power clamps

2 STANDARD
N = NAAMS Standard

3 VERSION
M = Pneumatic with hand lever

4 SIZE
80 = Ø 80 mm

5 ARM POSITION
N = No arm

For clamping arms according to NAAMS standard, please contact our Sales Dept.

6 SQUARE SHAFT
R = Right side only
L = Left side only
N = Both sides

7 SENSOR
N = No sensor (with protection plate)
K = Electronic sensor PNP, M12 (DF-K)
D = Pneumatic sensor (DF-UPNW80)
J = Electronic sensor NPN, optical (DF-J)
Y = Electronic sensor PNP, M12 (DF-Y) white LED

8 PORT THREAD
G = Gas
N = NPT

9 PRODUCT REVISION
Assigned by UNIVER

10 ATEX
X = ATEX option
See ATEX Catalogue for types and versions

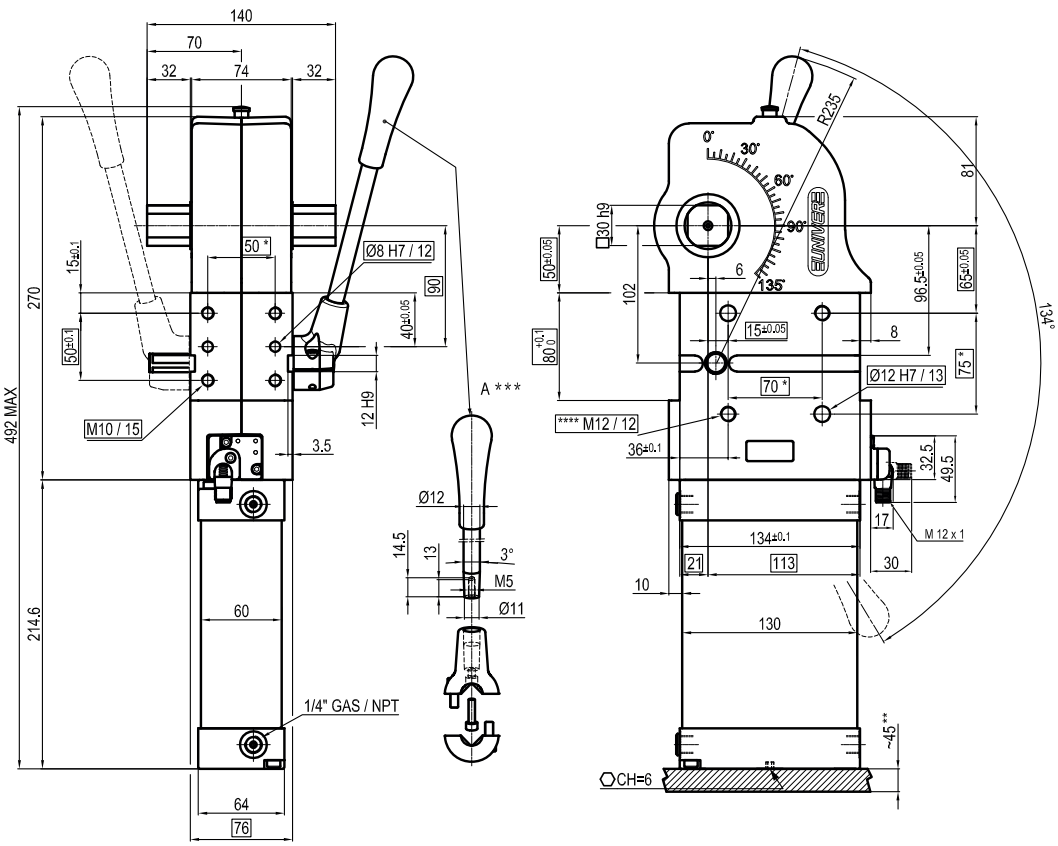

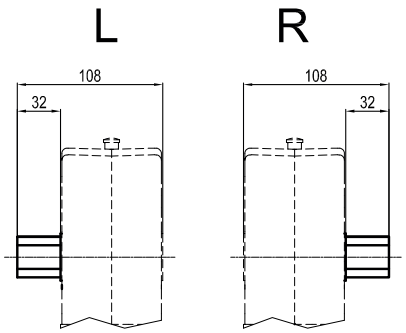

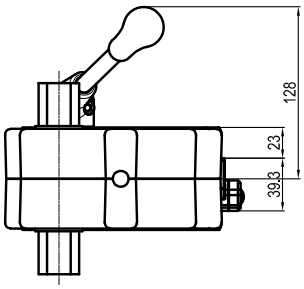

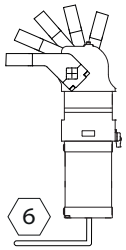

**TOLERANCE BETWEEN DOWELS ± 0,02 BETWEEN SCREW HOLES ± 0,1*
***AREA TO ACCESS ANGLE ADJUSTMENT*
****DIMENSIONS TO BE RESPECTED IN CASE OTHER MANUAL LEVERS ARE USED*

Maximum Applicable Load

Pressure: 5 bar - 90° cycle time (Open - Close)

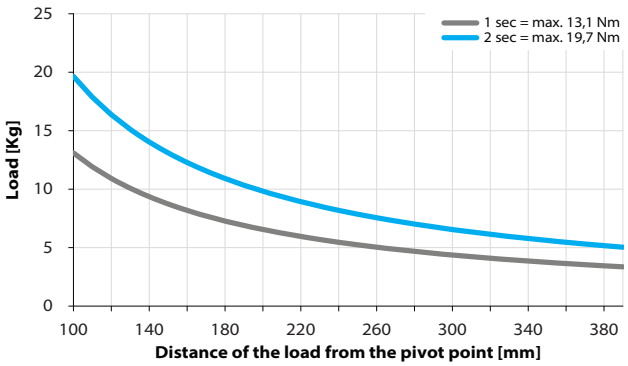

Air Consumption per Cycle

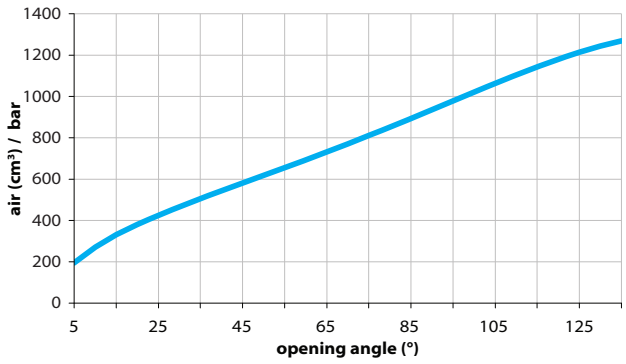

Sensors

Electronic (optical)

DF-K PNP M12
DF-J NPN M12
DF-Y PNP M12 White LED

Pneumatic

DF-UPNW80

Accessories

Handlever

UBF2580

Self holding system

UBK46P30N For blade arms
UBK46P30ND For wishbone arms

UCBL 450

Manual power clamps Ø50 mm

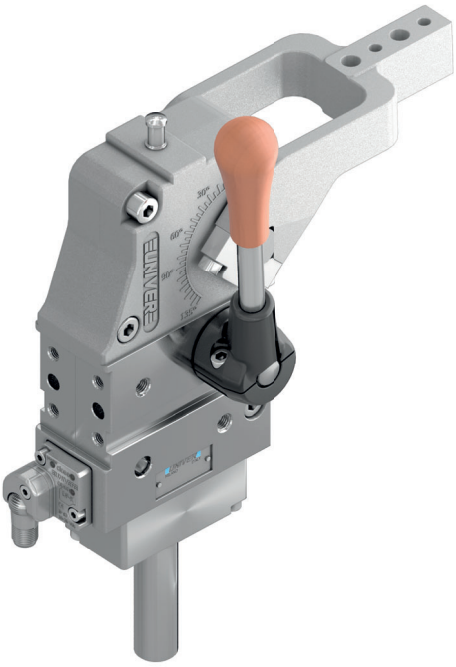

Manual power clamps size Ø50 mm with compensation system, toggle-joint mechanism and stepless adjustable opening angle, typically used for handling and holding metal sheets in welding applications

- Lightweight aluminium construction
- Integrated compensation system up to 1,7 mm
- Hand lever mount on both sides
- Fully optical electronic sensor or pneumatic sensor
- Fixing pattern on 4 sides
- Manual unlocking
- Self-holding system for open position available
- Clamping arm in aluminium or steel

CHARACTERISTICS

Operating temperature	**5° ÷ 45° C**
Opening angle*	**0° ÷ 135°**
Bore Ø	**50 mm**
Holding moment	**1750 Nm**
Clamping moment (0,5 MPa)	**420 Nm**
Weight (clamping arm not included)	**2,8 Kg**
Sensor	**electronic (optical)**
Supply voltage	**10 ÷ 30 Vdc**
IP code	**IP65**

**The opening angle range may vary according to the arm position and style.*

COMPENSATION

LIGHTWEIGHT

IRREVERSIBLE

ANGLE ADJUSTMENT

OPTICAL SENSOR

CODIFICATION KEY

UC	B	L	4	50	**V**	**E**	**A**	**K**	0	
1	2	3	4	5	6	7	8	9	10	11

1 SERIES
UC = UNICLAMP Power clamps

2 STANDARD
B = European standard

3 VERSION
L = Manual power clamp with hand lever

4 FIXING
4 = On 4 sides

5 SIZE
50 = Ø 50 mm

6 ARM POSITION

V = 90°

O = 180°

N = No arm

7 ARM STYLE
C = Central, 15 mm offset
D = Right, 15 mm offset
S = Left, 15 mm offset
E = Central, 45 mm offset
F = Right, 45 mm offset
L = Left, 45 mm offset
N = No arm
For other versions contact our Sales Dept.

8 ARM TYPE
A = Aluminium
S = Steel
N = No arm

9 SENSOR
N = No sensor (with protection plate)
K = Electronic sensor PNP, M12 (DF-K)
D = Pneumatic sensor (DF-UPNW)
J = Electronic sensor NPN, optical (DF-J)
Y = Electronic sensor PNP, M12 (DF-Y) white LED

10 PRODUCT REVISION
Assigned by UNIVER

11 ATEX
X = ATEX option
See ATEX Catalogue for types and versions

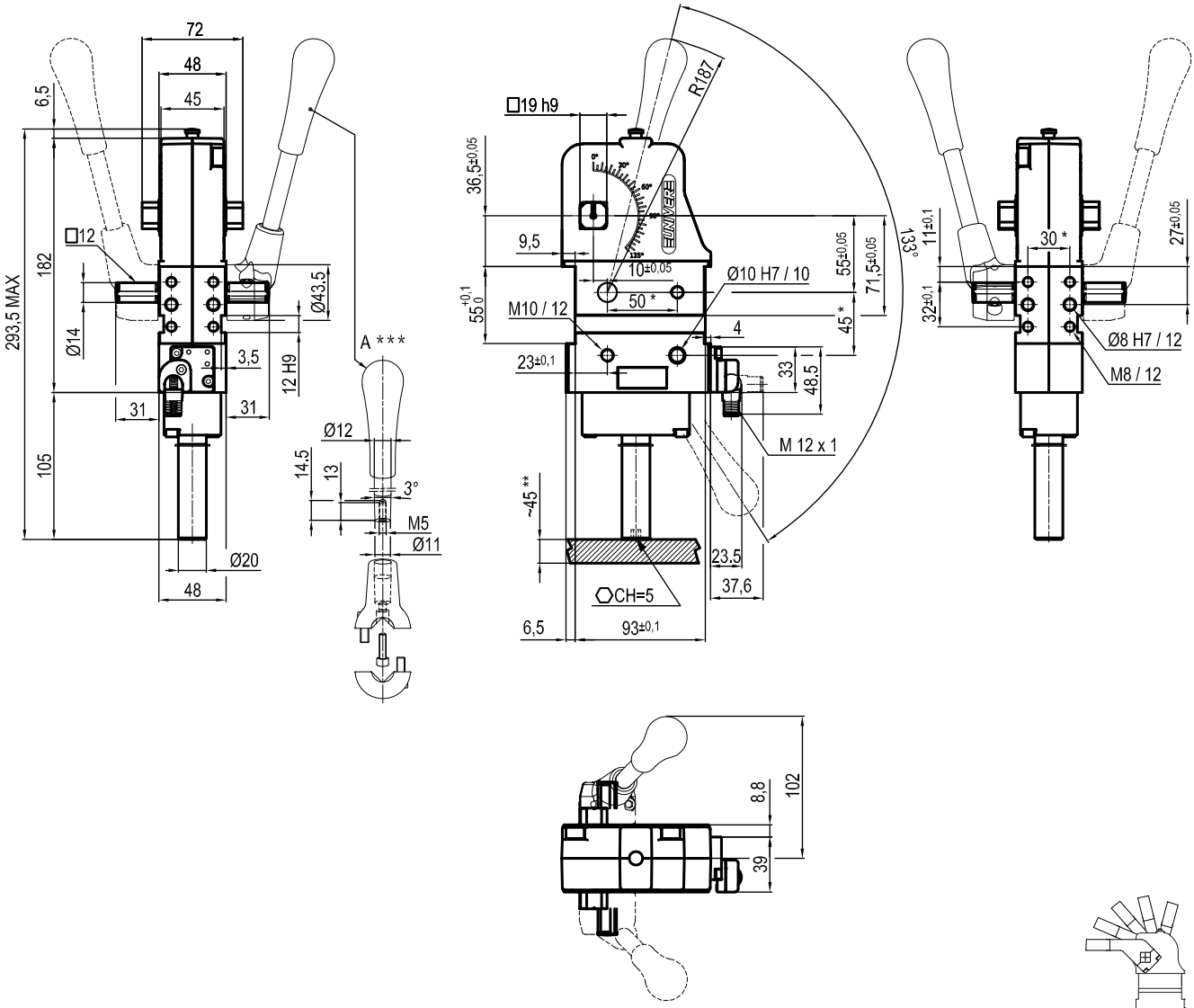

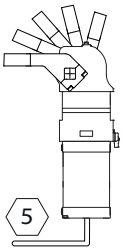

**TOLERANCE BETWEEN DOWELS ±0,02 BETWEEN SCREW HOLES ± 0,1*
***AREA TO ACCESS ANGLE ADJUSTEMNT*
****DIMENSIONS TO BE RESPECTED IN CASE OTHER MANUAL LEVERS ARE USED*

Maximum Applicable Load

Pressure: 5 bar - 90° cycle time (Open - Close)

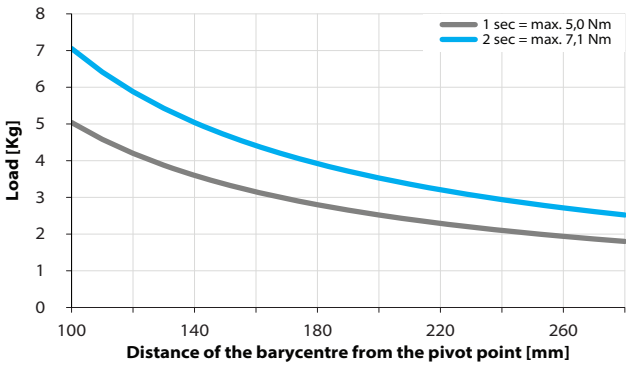

Clamping Arms

Arm Offset 15mm

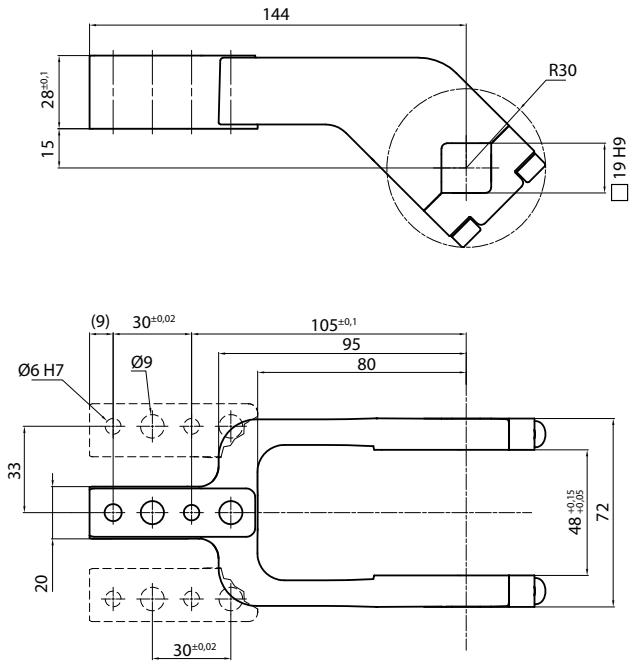

Arm Offset 45mm

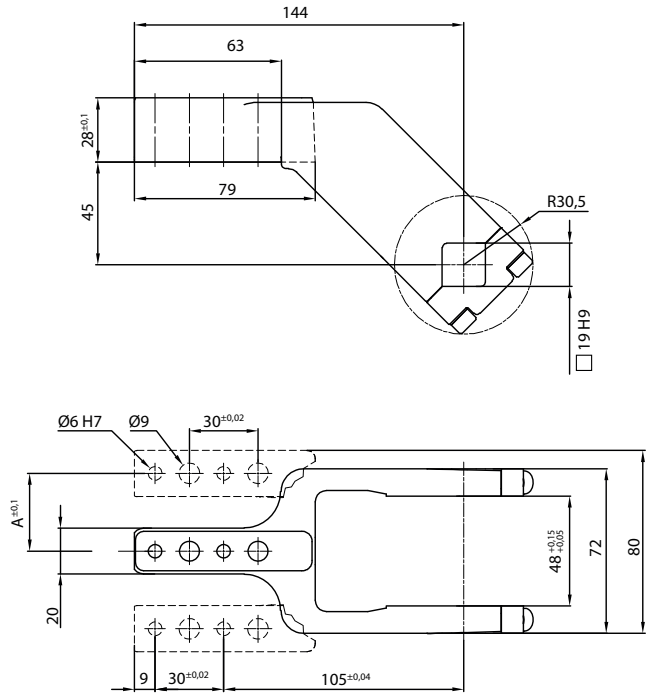

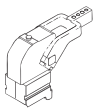

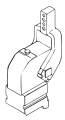

Armcode	Offset	Material	Arm style	Weight (Kg)	Opening angle (90°)	Opening angle (180°)
LKP00CL	15	ALUMINIUM	CENTRAL	0,4	0÷135°	0÷105°
LKP00DL	15	ALUMINIUM	RIGHT	0,4	0÷135°	0÷105°
LKP00SL	15	ALUMINIUM	LEFT	0,4	0÷135°	0÷105°
UP210151441G	15	STEEL	CENTRAL	0,8	0÷135°	0÷105°
UP210151442G	15	STEEL	RIGHT	0,8	0÷135°	0÷105°
UP210151443G	15	STEEL	LEFT	0,8	0÷135°	0÷105°
UKP5063E	45	ALUMINIUM	CENTRAL	0,45	0÷135°	0÷135°
UKP50F	45	ALUMINIUM	RIGHT	0,45	0÷135°	0÷135°
UKP50L	45	ALUMINIUM	LEFT	0,45	0÷135°	0÷135°
UKP5063ES	45	STEEL	CENTRAL	1,16	0÷135°	0÷135°
UKP50FS	45	STEEL	RIGHT	1,16	0÷135°	0÷135°
UKP50LS	45	STEEL	LEFT	1,16	0÷135°	0÷135°

Sensors

Electronic (optical)

DF-K PNP M12
DF-J NPN M12
DF-Y PNP M12 White LED

Pneumatic

DF-UPNW

Accessories

Handlever

UBF255063

Self holding system

UBK46P19

UCBL 463

Manual power clamps Ø63 mm

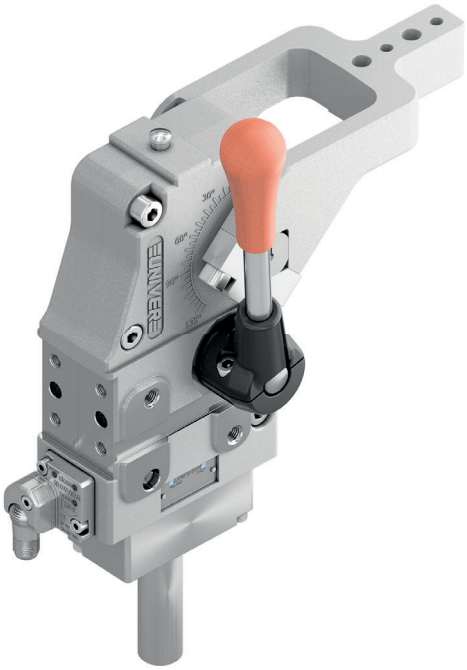

Manual power clamps size Ø63 mm with compensation system, toggle-joint mechanism and stepless adjustable opening angle, typically used for handling and holding metal sheets in welding applications

- Lightweight aluminium construction
- Integrated compensation system up to 2,7 mm
- Hand lever mount on both sides
- Fully optical electronic sensor or pneumatic sensor
- Fixing pattern on 4 sides
- Manual unlocking
- Self-holding system for open position available
- Clamping arm in aluminium or steel

CHARACTERISTICS

Operating temperature	**5° ÷ 45° C**
Opening angle*	**0° ÷ 135°**
Bore Ø	**63 mm**
Holding moment	**1750 Nm**
Clamping moment (0,5 MPa)	**420 Nm**
Weight (clamping arm not included)	**2,95 Kg**
Sensor	**electronic (optical)**
Supply voltage	**10 ÷ 30 Vdc**
IP code	**IP65**

**The opening angle range may vary according to the arm position and style.*

COMPENSATION

LIGHTWEIGHT

IRREVERSIBLE

ANGLE ADJUSTMENT

OPTICAL SENSOR

CODIFICATION KEY

UC	B	L	4	63	V	E	A	K	0	
1	2	3	4	5	6	7	8	9	10	11

1 SERIES
UC = UNICLAMP Power clamps

2 STANDARD
B = European standard

3 VERSION
L = Manual power clamp with hand lever

4 FIXING
4 = On 4 sides

5 SIZE
63 = Ø 63 mm

6 ARM POSITION

V = 90°

O = 180°

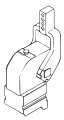

N = No arm

7 ARM STYLE
C = Central, 15 mm offset
D = Right, 15 mm offset
S = Left, 15 mm offset
E = Central, 45 mm offset
F = Right, 45 mm offset
L = Left, 45 mm offset
N = No arm
For other versions contact our Sales Dept.

8 ARM TYPE
A = Aluminium
S = Steel
N = No arm

9 SENSOR
N = No sensor (with protection plate)
K = Electronic sensor PNP, M12 (DF-K)
D = Pneumatic sensor (DF-UPNW)
J = Electronic sensor NPN, optical (DF-J)
Y = Electronic sensor PNP, M12 (DF-Y) white LED

10 PRODUCT REVISION
Assigned by UNIVER

11 ATEX
X = ATEX option
See ATEX Catalogue for types and versions

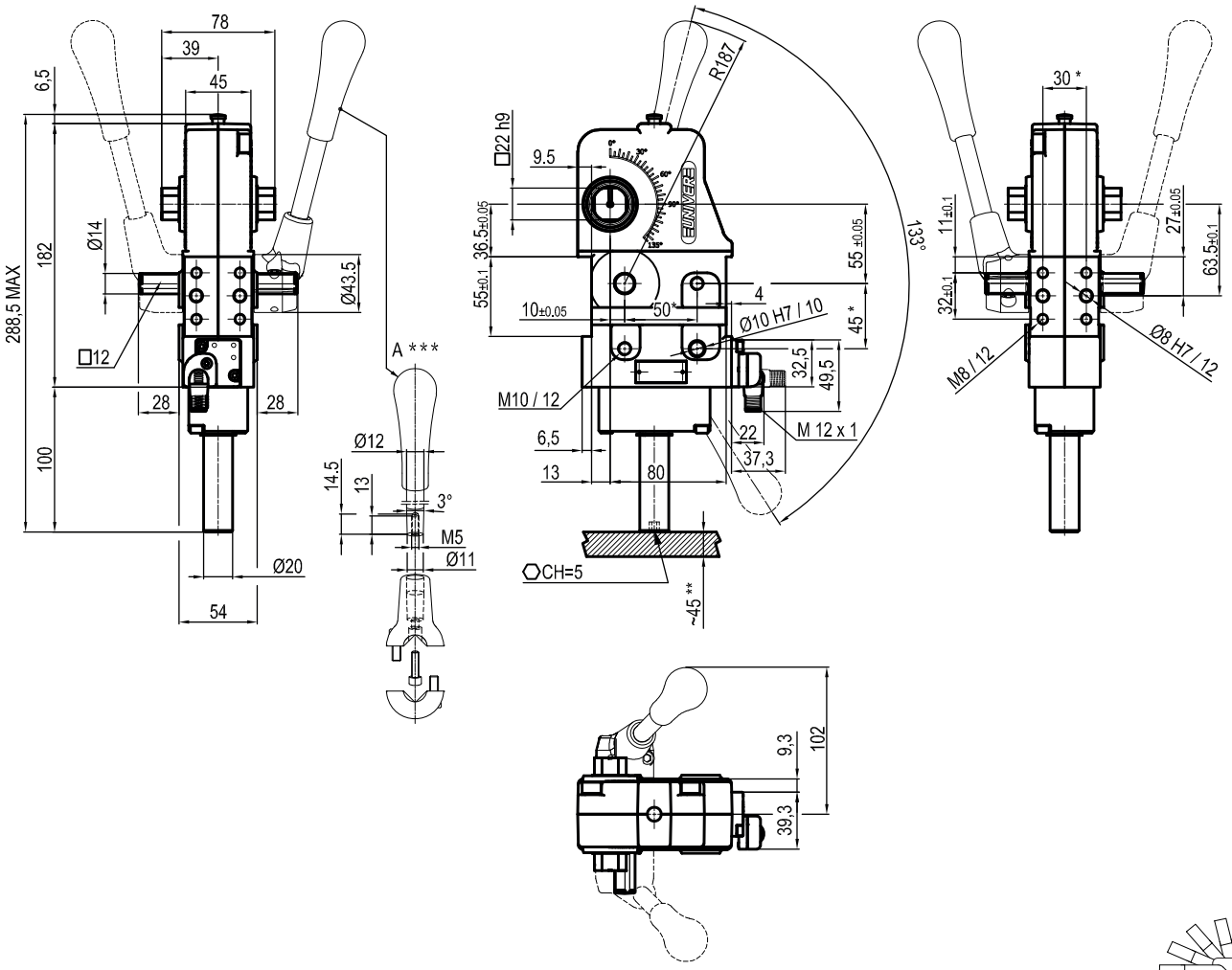

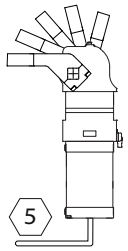

**TOLERANCE BETWEEN DOWELS ± 0,02 BETWEEN SCREW HOLES ± 0,1*
***AREA TO ACCESS ANGLE ADJUSTMENT*
****DIMENSIONS TO BE RESPECTED IN CASE OTHER MANUAL LEVERS ARE USED*

Maximum Applicable Load

Pressure: 5 bar - 90° cycle time (Open - Close)

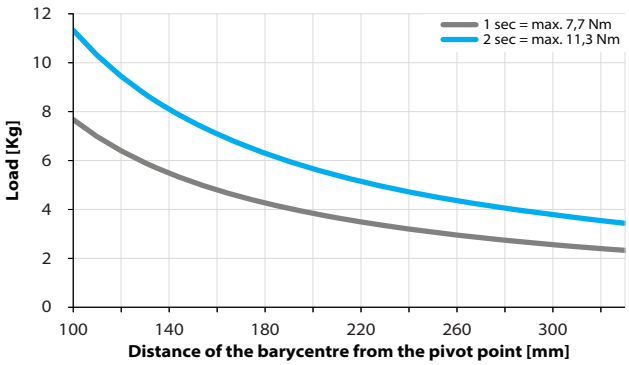

Clamping Arms

Arm Offset 15mm

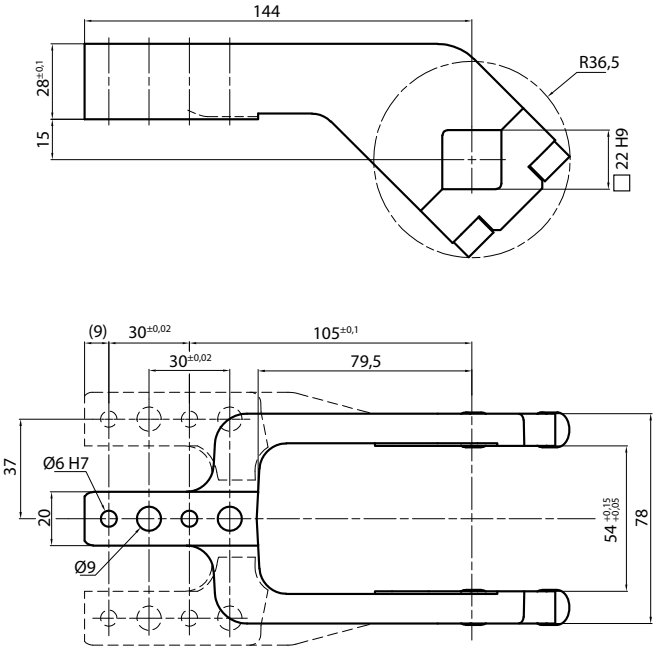

Arm Offset 45mm

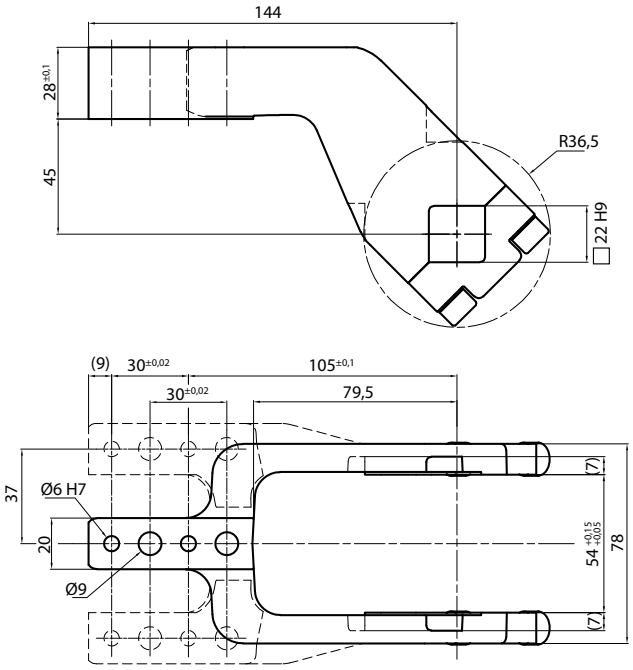

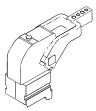

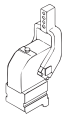

Armcode	Offset	Material	Arm style	Weight (Kg)	Opening angle (90°)	Opening angle (180°)
UP310151441A	15	ALUMINIUM	CENTRAL	0,3	0÷135°	0÷110°
UP310151442A	15	ALUMINIUM	RIGHT	0,3	0÷135°	0÷110°
UP310151443A	15	ALUMINIUM	LEFT	0,3	0÷135°	0÷110°
UP310151441G	15	STEEL	CENTRAL	1,2	0÷135°	0÷110°
UP310151442G	15	STEEL	RIGHT	1,2	0÷135°	0÷110°
UP310151443G	15	STEEL	LEFT	1,2	0÷135°	0÷110°
UP310451441A	45	ALUMINIUM	CENTRAL	0,3	0÷135°	0÷135°
UP310451442A	45	ALUMINIUM	RIGHT	0,3	0÷135°	0÷135°
UP310451443A	45	ALUMINIUM	LEFT	0,3	0÷135°	0÷135°
UP310451441G	45	STEEL	CENTRAL	1,4	0÷135°	0÷135°
UP310451442G	45	STEEL	RIGHT	1,4	0÷135°	0÷135°
UP310451443G	45	STEEL	LEFT	1,4	0÷135°	0÷135°

Sensors

Electronic (optical)

DF-K PNP M12
DF-J NPN M12
DF-Y PNP M12 White LED

Pneumatic

DF-UPNW

Accessories

Handlever

UBF255063

Self holding system

UBK46P22

UABP 32

Air saving pneumatic power clamps size 32

AIR SAVING pneumatic power clamps with compensation system, toggle-joint mechanism and stepless adjustable opening angle. The special construction enables a relevant reduction in Air consumption, without affecting standard performances required from the market.

- Air consumption saving up to 39%
- Reduced dimensions compared to standard power clamps
- Version with hand lever available
- Fully optical electronic sensor
- Fixing pattern on 4 sides
- Manual unlocking in case of air loss
- Self-holding system for open position available
- Clamping arm in aluminium

CHARACTERISTICS

Operating temperature	**5° ÷ 45° C**
Min./Max. Operating pressure	**0,4 / 0,6 MPa**
Opening angle*	**0° ÷ 135°**
Size	**32**
Cylinder bore Ø	**25 mm**
Holding moment	**250 Nm**
Clamping moment (0,5 MPa)	**50 Nm**
Weight (clamping arm not included)	**1,2 Kg**
Pneumatic supply ports	**M5**
Sensor	**electronic (optical)**
Supply voltage	**10 ÷ 30 Vdc**
IP code	**IP65**

**The opening angle range may vary according to the arm position and style.*

CODIFICATION KEY

AIR SAVING

COMPENSATION

LIGHTWEIGHT

IRREVERSIBLE

ANGLE ADJUSTMENT

OPTICAL SENSOR

UA	B	P	32	O	E	A	K	0	
1	2	3	4	5	6	7	8	9	10

1 SERIES
UA = BLUECLAMP Power clamps air saving

2 STANDARD
B = European standard

3 VERSION
P = Pneumatic

4 SIZE
32 = Size 32 (Cylinder Ø25 mm)

5 ARM POSITION

V = 90°

O = 180°

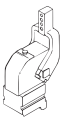

N = No arm

6 ARM STYLE
B = Central, 0 mm offset
C = Central, 10 mm offset
E = Central, 25 mm offset
N = No arm
For other versions contact our Sales Dept.

7 ARM TYPE
A = Aluminium
N = No arm

8 SENSOR
N = No sensor (with protection plate)
K = Electronic sensor PNP (M12) (DF-K)
J = Electronic sensor NPN (optical) (DF-J)
Y = Electronic sensor PNP (M12) (DF-Y) white LED

9 PRODUCT REVISION
Assigned by UNIVER

10 ATEX
X = ATEX option
See ATEX Catalogue for types and versions

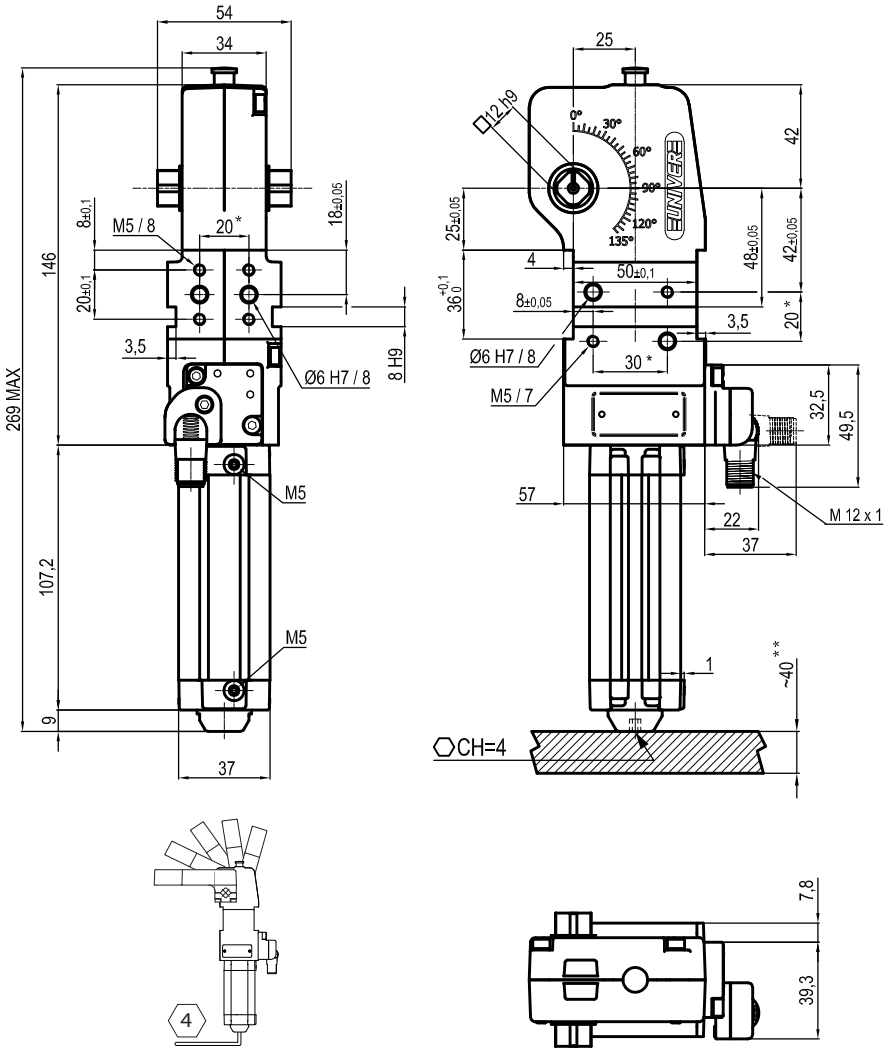

**TOLERANCE BETWEEN DOWELS ± 0,02 BETWEEN SCREW HOLES ± 0,1*
***AREA TO ACCESS ANGLE ADJUSTMENT*

Air Consumption per Cycle

Compared with standard version

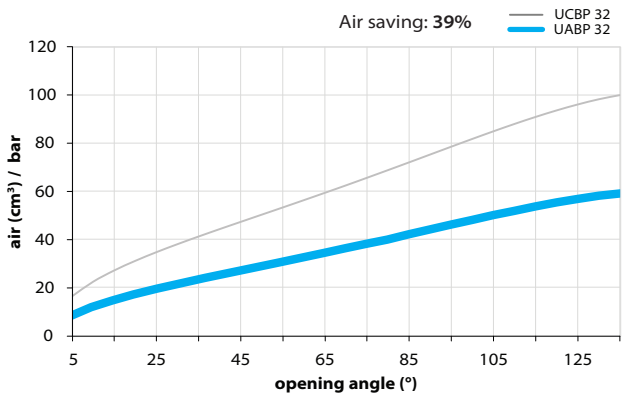

Clamping Arms

Arm Offset 0mm

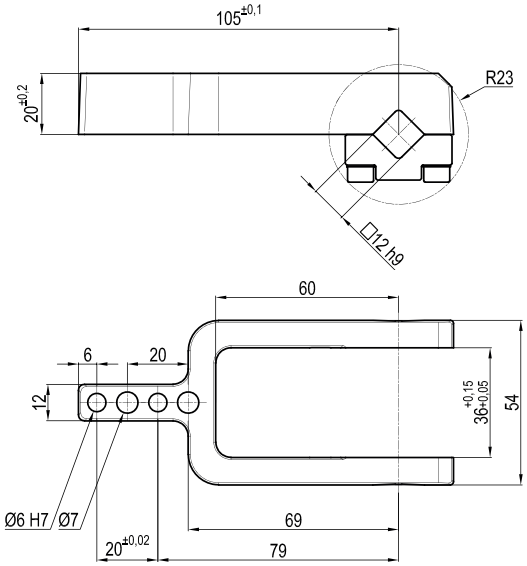

Arm Offset 10mm

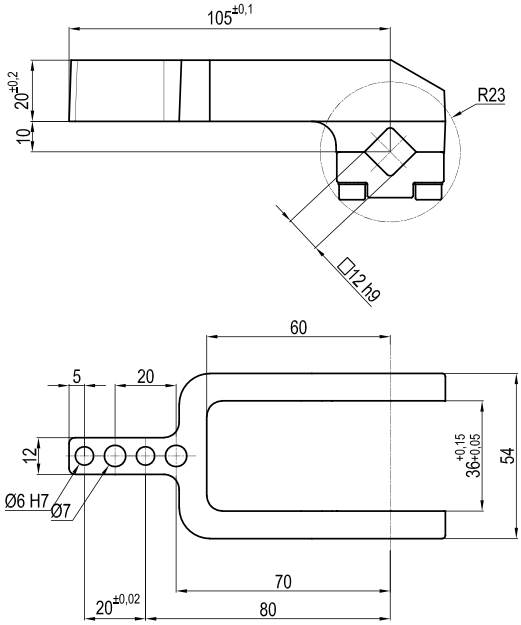

Arm Offset 25mm

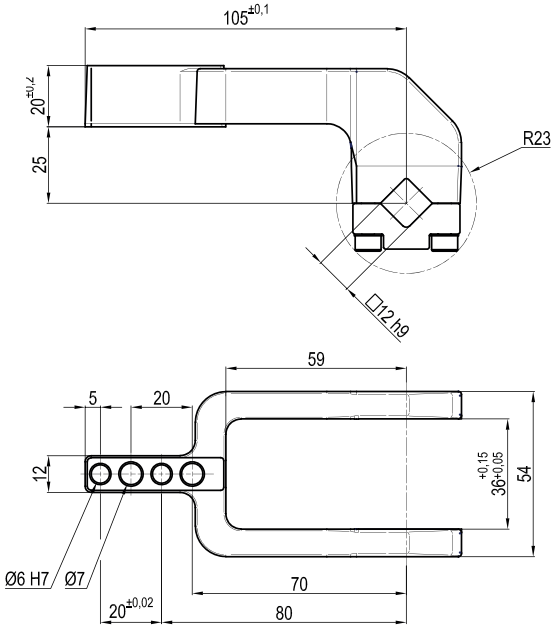

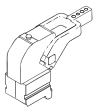

Armcode	Offset	Material	Arm style	Weight (Kg)	Opening angle (90°)	Opening angle (180°)
LKP32B	0	ALUMINIUM	CENTRAL	0,15	0÷135°	0÷105°
LKP32C	10	ALUMINIUM	CENTRAL	0,15	0÷135°	0÷120°
LKP32E	25	ALUMINIUM	CENTRAL	0,15	0÷135°	0÷125°

Sensors

Electronic (optical)

DF-K PNP M12
DF-J NPN M12
DF-Y PNP M12 White LED

Accessories

Self holding system

UBK46P12

UABP 40

Air saving pneumatic power clamps size 40

AIR SAVING pneumatic power clamps with compensation system, toggle-joint mechanism and stepless adjustable opening angle. The special construction enables a relevant reduction in air consumption, without affecting standard performances required from the market.

- Air consumption saving up to 37%
- Reduced dimensions compared to standard power clamps
- Integrated compensation
- Version with hand lever available
- Fully optical electronic sensor
- Fixing pattern on 4 sides
- Manual unlocking in case of air loss
- Self-holding system for open position available
- Clamping arm in aluminium or steel

CHARACTERISTICS

Operating temperature	**5° ÷ 45° C**
Min./Max. Operating pressure	**0,4 / 0,6 MPa**
Opening angle*	**0° ÷ 135°**
Size	**40**
Cylinder bore Ø	**32 mm**
Holding moment	**600 Nm**
Clamping moment (0,5 MPa)	**125 Nm**
Weight (clamping arm not included)	**1,4 Kg**
Pneumatic supply ports	**G1/8**
Sensor	**electronic (optical)**
Supply voltage	**10 ÷ 30 Vdc**
IP code	**IP65**

**The opening angle range may vary according to the arm position and style.*

AIR SAVING

COMPENSATION

LIGHTWEIGHT

IRREVERSIBLE

ANGLE ADJUSTMENT

OPTICAL SENSOR

CODIFICATION KEY

UA	B	P	40	**O**	**E**	**A**	**K**	0	
1	2	3	4	5	6	7	8	9	10

1 SERIES
UA = BLUECLAMP Power clamps air saving

2 STANDARD
B = European standard

3 VERSION
P = Pneumatic

4 SIZE
40 = Size 40 (Cylinder Ø32 mm)

5 ARM POSITION

V = 90°

O = 180°

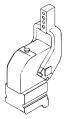

N = No arm

6 ARM STYLE
C = Central, 15 mm offset
D = Right, 15 mm offset
S = Right, 15 mm offset
E = Central, 45 mm offset
F = Central, 45 mm offset
L = Central, 45 mm offset
N = No arm
For other versions contact our Sales Dept.

7 ARM TYPE
A = Aluminium
S = Steel
N = No arm

8 SENSOR
N = No sensor (with protection plate)
K = Electronic sensor PNP (M12) (DF-K)
J = Electronic sensor NPN (optical) (DF-J)
Y = Electronic sensor PNP (M12) (DF-Y) white LED

9 PRODUCT REVISION
Assigned by UNIVER

10 ATEX
X = ATEX option
See ATEX Catalogue for types and versions

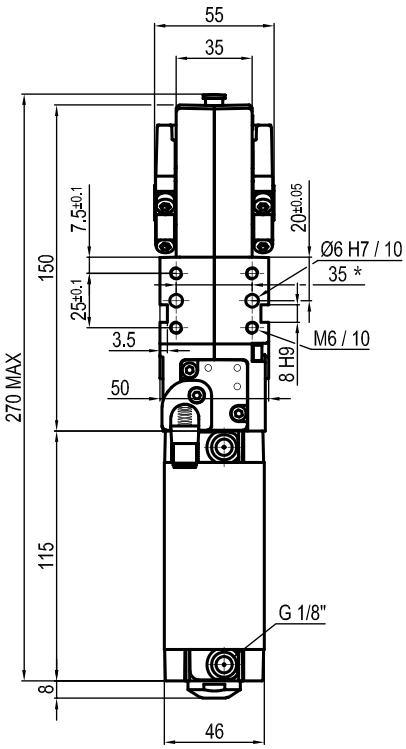

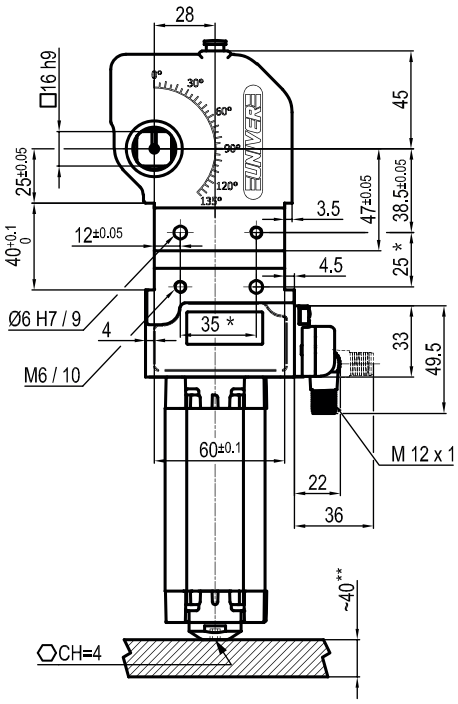

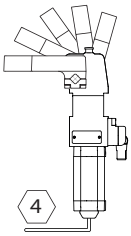

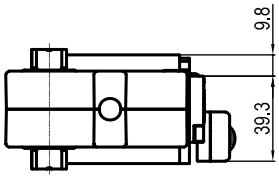

**TOLERANCE BETWEEN DOWELS ± 0,02 BETWEEN SCREW HOLES ± 0,1*
***AREA TO ACCESS ANGLE ADJUSTMENT*

Air Consumption per Cycle

Compared with standard version

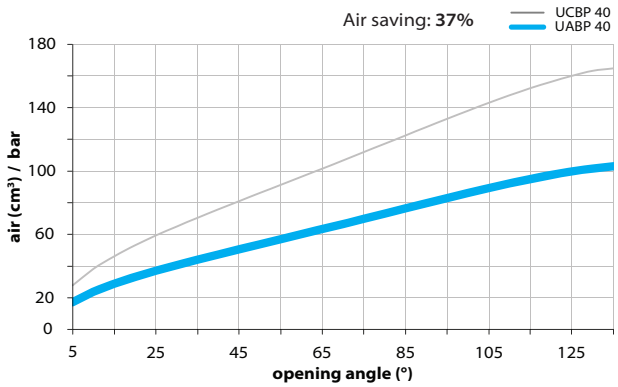

Clamping Arms

Arm Offset 15mm

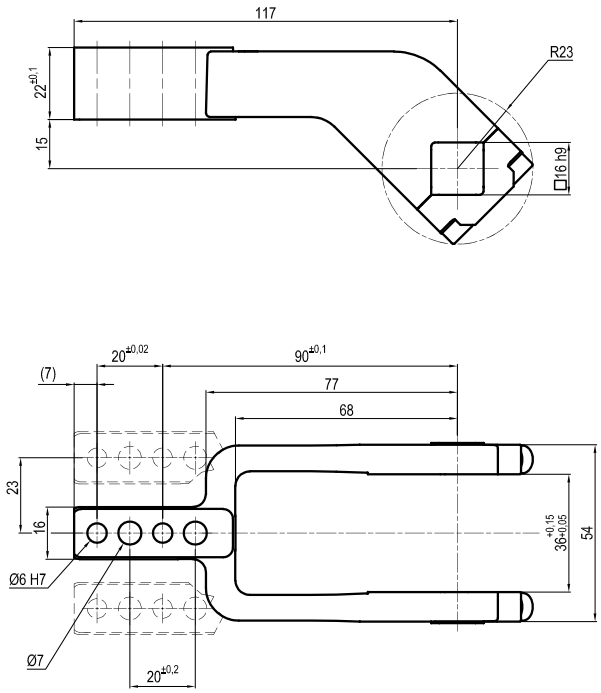

Arm Offset 45mm

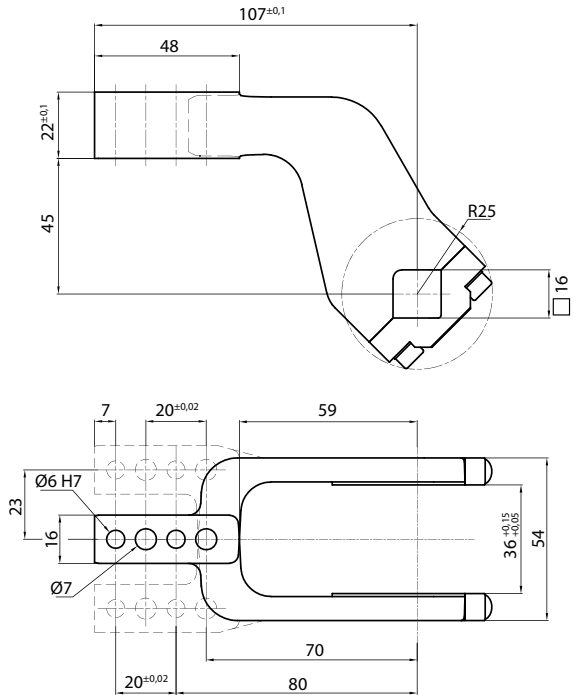

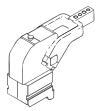

Armcode	Offset	Material	Arm style	Weight (Kg)	Opening angle (90°)	Opening angle (180°)
LKP01CST	15	ALUMINIUM	CENTRAL	0,2	0÷135°	0÷125°
LKP01DST	15	ALUMINIUM	RIGHT	0,2	0÷135°	0÷125°
LKP01SST	15	ALUMINIUM	LEFT	0,2	0÷135°	0÷125°
UP120151441S	15	STEEL	CENTRAL	0,4	0÷135°	0÷125°
UP120151442S	15	STEEL	RIGHT	0,4	0÷135°	0÷125°
UP120151443S	15	STEEL	LEFT	0,4	0÷135°	0÷125°
UKP01E	45	ALUMINIUM	CENTRAL	0,25	0÷125°	0÷135°
UKP01F	45	ALUMINIUM	RIGHT	0,25	0÷125°	0÷135°
UKP01L	45	ALUMINIUM	LEFT	0,25	0÷125°	0÷135°
UKP01ES	45	STEEL	CENTRAL	0,4	0÷125°	0÷135°
UKP01FS	45	STEEL	RIGHT	0,4	0÷125°	0÷135°
UKP01LS	45	STEEL	LEFT	0,4	0÷125°	0÷135°

Sensors

Electronic (optical)

DF-K PNP M12
DF-J NPN M12
DF-Y PNP M12 White LED

Accessories

Self holding system

UBK46P16 For arm 15 offset
UBK46P16-45 For arm 45 offset

UABP 50

Air saving pneumatic power clamps size 50

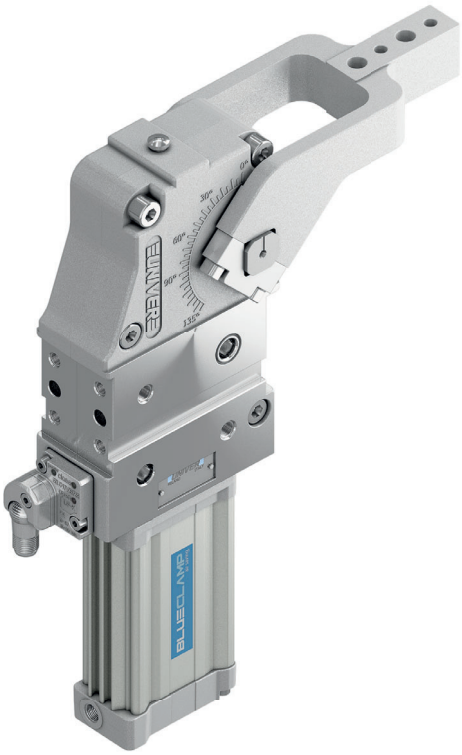

AIR SAVING pneumatic power clamps with compensation system, toggle-joint mechanism and stepless adjustable opening angle. The special construction enables a relevant reduction in air consumption, without affecting standard performances required from the market.

- Air consumption saving up to 35%
- Reduced dimensions compared to standard power clamps
- Integrated compensation
- Version with hand lever available
- Fully optical electronic sensor
- Fixing pattern on 4 sides
- Manual unlocking in case of air loss
- Self-holding system for open position available
- Clamping arm in aluminium or steel

CHARACTERISTICS

Operating temperature	**5° ÷ 45° C**
Min./Max. Operating pressure	**0,4 / 0,6 MPa**
Opening angle*	**0° ÷ 135°**
Size	**50**
Cylinder bore Ø	**40 mm**
Holding moment	**1250 Nm**
Clamping moment (0,5 MPa)	**170 Nm**
Weight (clamping arm not included)	**2,3 Kg**
Pneumatic supply ports	**G1/4 on both sides**
Sensor	**electronic (optical)**
Supply voltage	**10 ÷ 30 Vdc**
IP code	**IP65**

**The opening angle range may vary according to the arm position and style.*

CODIFICATION KEY

AIR SAVING

COMPENSATION

LIGHTWEIGHT

IRREVERSIBLE

ANGLE ADJUSTMENT

OPTICAL SENSOR

COMPACT

UA	B	P	50	**O**	**E**	**A**	**K**	0	
1	2	3	4	5	6	7	8	9	10

1 SERIES
UA = BLUECLAMP Power clamps air saving

2 STANDARD
B = European standard

3 VERSION
P = Pneumatic

4 SIZE
50 = Size 50 (Cylinder Ø40 mm)

5 ARM POSITION

V = 90°

O = 180°

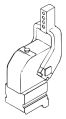

N = No arm

6 ARM STYLE
C = Central, 15 mm offset
D = Right, 15 mm offset
S = Right, 15 mm offset
E = Central, 45 mm offset
F = Central, 45 mm offset
L = Central, 45 mm offset
N = No arm
For other versions contact our Sales Dept.

7 ARM TYPE
A = Aluminium
S = Steel
N = No arm

8 SENSOR
N = No sensor (with protection plate)
K = Electronic sensor PNP (M12) (DF-K)
J = Electronic sensor NPN (optical) (DF-J)
Y = Electronic sensor PNP (M12) (DF-Y) white LED

9 PRODUCT REVISION
Assigned by UNIVER

10 ATEX
X = ATEX option
See ATEX Catalogue for types and versions

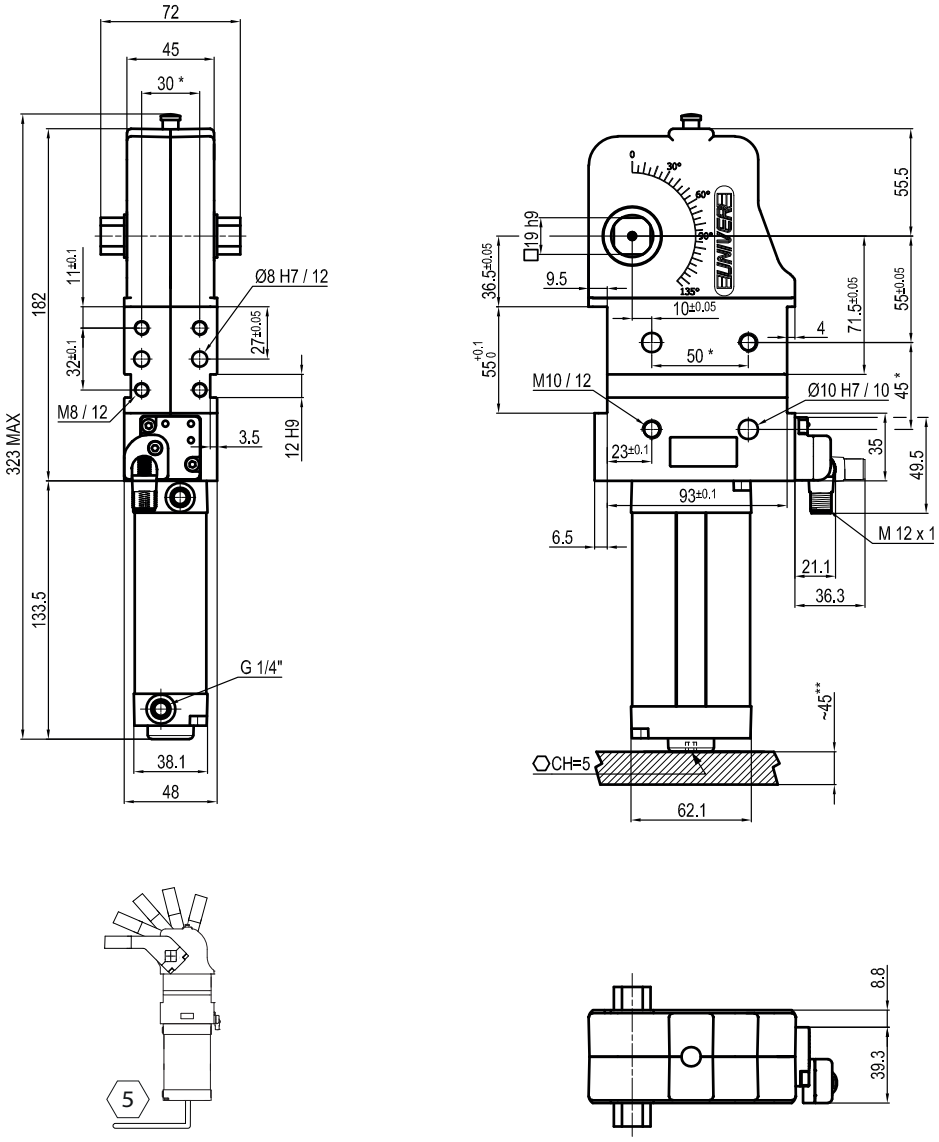

**TOLERANCE BETWEEN DOWELS ± 0,02 BETWEEN SCREW HOLES ± 0,1*
***AREA TO ACCESS ANGLE ADJUSTMENT*

Air Consumption per Cycle

Compared with standard version

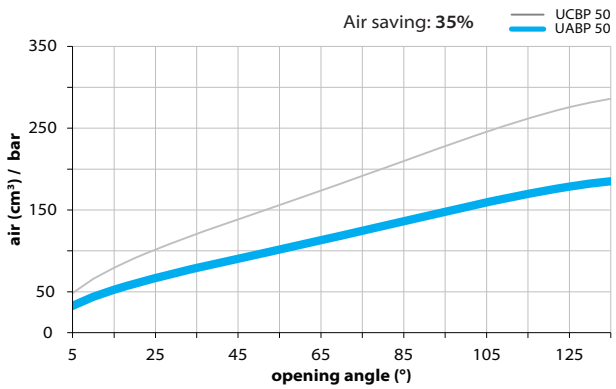

Clamping Arms

Arm Offset 15mm

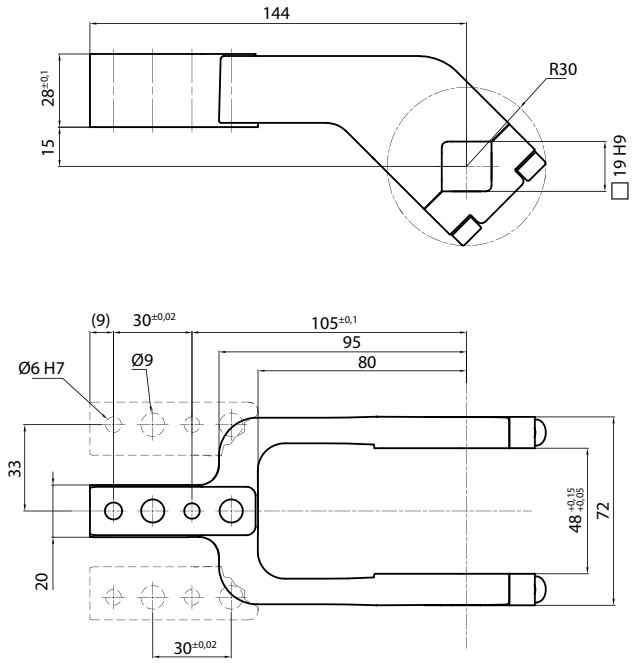

Arm Offset 45mm

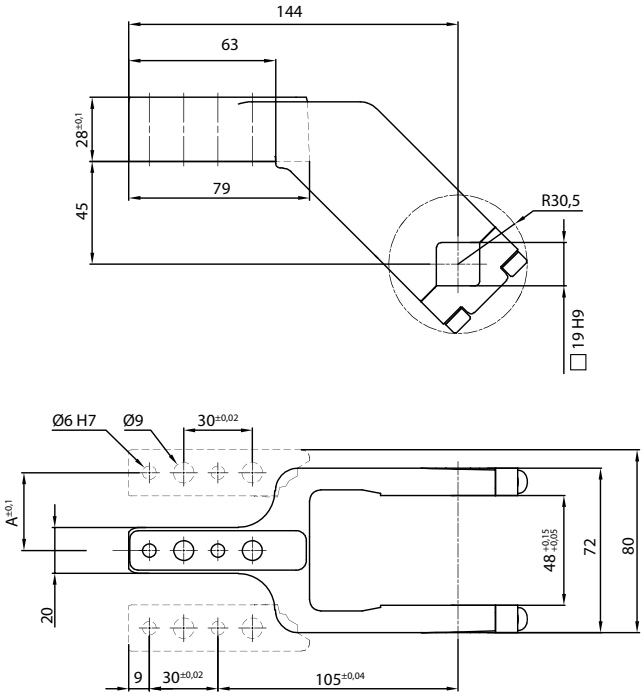

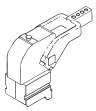

Armcode	Offset	Material	Arm style	Weight (Kg)	Opening angle (90°)	Opening angle (180°)
LKP00CL	15	ALUMINIUM	CENTRAL	0,4	0÷135°	0÷105°
LKP00DL	15	ALUMINIUM	RIGHT	0,4	0÷135°	0÷105°
LKP00SL	15	ALUMINIUM	LEFT	0,4	0÷135°	0÷105°
UP210151441G	15	STEEL	CENTRAL	0,8	0÷135°	0÷105°
UP210151442G	15	STEEL	RIGHT	0,8	0÷135°	0÷105°
UP210151443G	15	STEEL	LEFT	0,8	0÷135°	0÷105°
UKP5063E	45	ALUMINIUM	CENTRAL	0,45	0÷135°	0÷135°
UKP50F	45	ALUMINIUM	RIGHT	0,45	0÷135°	0÷135°
UKP50L	45	ALUMINIUM	LEFT	0,45	0÷135°	0÷135°
UKP5063ES	45	STEEL	CENTRAL	1,16	0÷135°	0÷135°
UKP50FS	45	STEEL	RIGHT	1,16	0÷135°	0÷135°
UKP50LS	45	STEEL	LEFT	1,16	0÷135°	0÷135°

Sensors

Electronic (optical)

DF-K PNP M12
DF-J NPN M12
DF-Y PNP M12 White LED

Accessories

Self holding system

UBK46P19

UABP 63

Air saving pneumatic power clamps size 63

AIR SAVING pneumatic power clamps with compensation system, toggle-joint mechanism and stepless adjustable opening angle. The special construction enables a relevant reduction in air consumption, without affecting standard performances required from the market.

- Air consumption saving up to 27%
- Reduced dimensions compared to standard power clamps
- Integrated compensation
- Version with hand lever available
- Fully optical electronic sensor
- Fixing pattern on 4 sides
- Manual unlocking in case of air loss
- Self-holding system for open position available
- Clamping arm in aluminium or steel

CHARACTERISTICS

Operating temperature	**5° ÷ 45° C**
Min./Max. Operating pressure	**0,4 / 0,6 MPa**
Opening angle*	**0° ÷ 135°**
Size	**63**
Cylinder bore Ø	**50 mm**
Holding moment	**1750 Nm**
Clamping moment (0,5 MPa)	**380 Nm**
Weight (clamping arm not included)	**3,2 Kg**
Pneumatic supply ports	**G1/4 on both sides**
Sensor	**electronic (optical)**
Supply voltage	**10 ÷ 30 Vdc**
IP code	**IP65**

**The opening angle range may vary according to the arm position and style.*

CODIFICATION KEY

UA	B	P	63	**O**	**E**	**A**	**K**	0	
1	2	3	4	5	6	7	8	9	10

AIR SAVING

COMPENSATION

LIGHTWEIGHT

IRREVERSIBLE

ANGLE ADJUSTMENT

OPTICAL SENSOR

COMPACT

1 SERIES
UA = BLUECLAMP Power clamps air saving

2 STANDARD
B = European standard

3 VERSION
P = Pneumatic

4 SIZE
63 = Size 63 (Cylinder Ø50 mm)

5 ARM POSITION

V = 90°

O = 180°

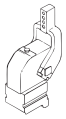

N = No arm

6 ARM STYLE
C = Central, 15 mm offset
D = Right, 15 mm offset
S = Right, 15 mm offset
E = Central, 45 mm offset
F = Central, 45 mm offset
L = Central, 45 mm offset
N = No arm
For other versions contact our Sales Dept.

7 ARM TYPE
A = Aluminium
S = Steel
N = No arm

8 SENSOR
N = No sensor (with protection plate)
K = Electronic sensor PNP (M12) (DF-K)
J = Electronic sensor NPN (optical) (DF-J)
Y = Electronic sensor PNP (M12) (DF-Y) white LED

9 PRODUCT REVISION
Assigned by UNIVER

10 ATEX
X = ATEX option
See ATEX Catalogue for types and versions

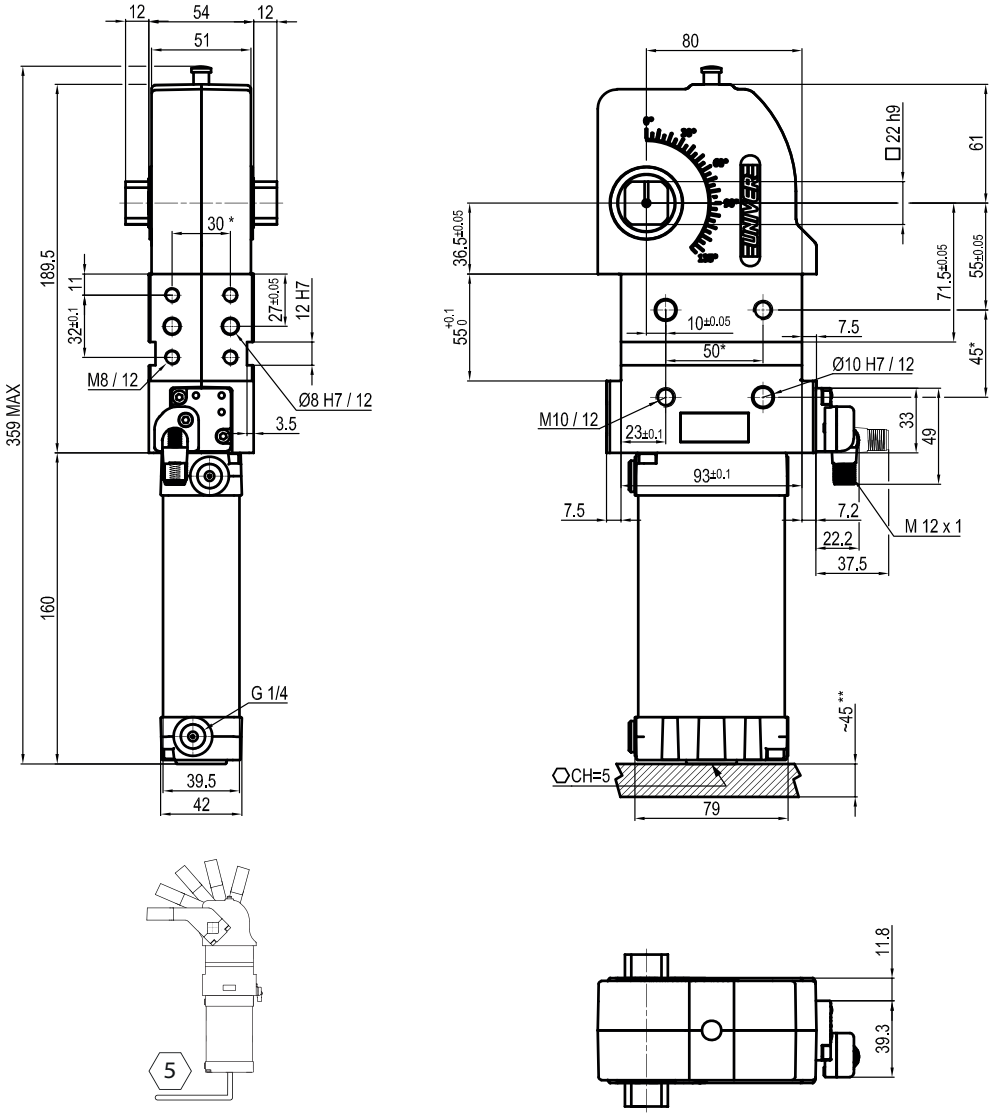

**TOLERANCE BETWEEN DOWELS ± 0,02 BETWEEN SCREW HOLES ± 0,1*
***AREA TO ACCESS ANGLE ADJUSTMENT*

Air Consumption per Cycle

Compared with standard version

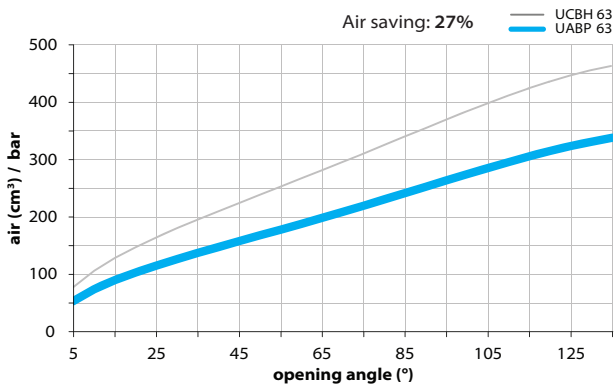

Clamping Arms

Arm Offset 15mm

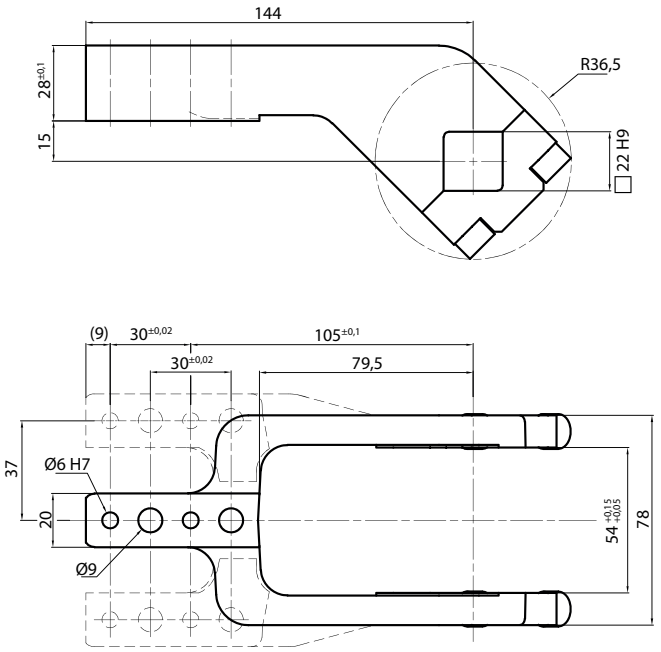

Arm Offset 45mm

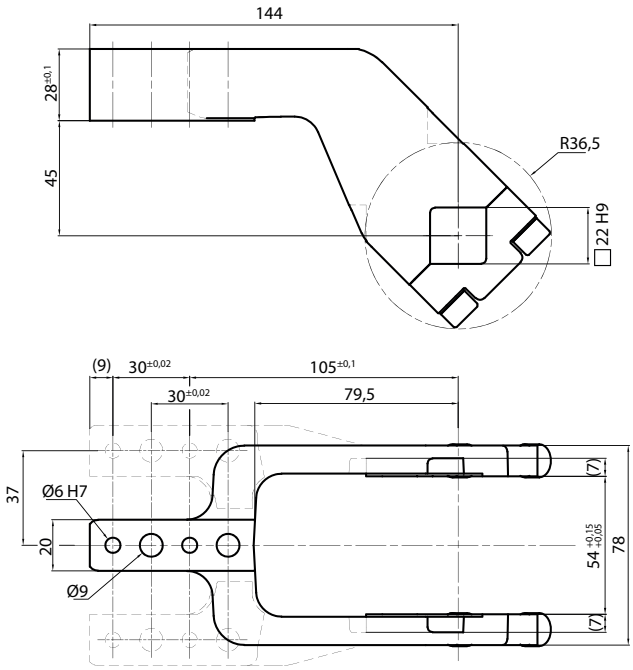

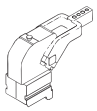

Armcode	Offset	Material	Arm style	Weight (Kg)	Opening angle (90°)	Opening angle (180°)
UP310151441A	15	ALUMINIUM	CENTRAL	0,3	0÷135°	0÷105°
UP310151442A	15	ALUMINIUM	RIGHT	0,3	0÷135°	0÷105°
UP310151443A	15	ALUMINIUM	LEFT	0,3	0÷135°	0÷105°
UP310151441S	15	STEEL	CENTRAL	1,2	0÷135°	0÷105°
UP310151442S	15	STEEL	RIGHT	1,2	0÷135°	0÷105°
UP310151443S	15	STEEL	LEFT	1,2	0÷135°	0÷105°
UP310451441A	45	ALUMINIUM	CENTRAL	0,3	0÷135°	0÷135°
UP310451442A	45	ALUMINIUM	RIGHT	0,3	0÷135°	0÷135°
UP310451443A	45	ALUMINIUM	LEFT	0,3	0÷135°	0÷135°
UP310451441S	45	STEEL	CENTRAL	1,4	0÷135°	0÷135°
UP310451442S	45	STEEL	RIGHT	1,4	0÷135°	0÷135°
UP310451443S	45	STEEL	LEFT	1,4	0÷135°	0÷135°

Sensors

Electronic (optical)

DF-K PNP M12
DF-J NPN M12
DF-Y PNP M12 White LED

Accessories

Self holding system

UBK46P22

UABP 80

Air saving pneumatic power clamps size 80

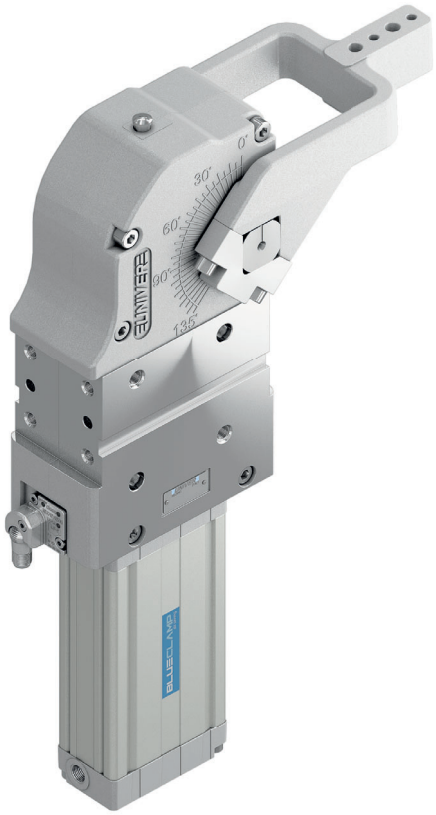

AIR SAVING pneumatic power clamps with compensation system, toggle-joint mechanism and stepless adjustable opening angle. The special construction enables a relevant reduction in air consumption, without affecting standard performances required from the market.

- Air consumption saving up to 38%
- Reduced dimensions compared to standard power clamps
- Integrated compensation
- Version with hand lever available
- Fully optical electronic sensor
- Fixing pattern on 4 sides
- Manual unlocking in case of air loss
- Self-holding system for open position available
- Clamping arm in aluminium or steel

CHARACTERISTICS

Operating temperature	**5° ÷ 45° C**
Min./Max. Operating pressure	**0,4 / 0,6 MPa**
Opening angle*	**0° ÷ 135°**
Size	**80**
Cylinder bore Ø	**63 mm**
Holding moment	**4000 Nm**
Clamping moment (0,5 MPa)	**880 Nm**
Weight (clamping arm not included)	**7 Kg**
Pneumatic supply ports	**G1/4 on both sides**
Sensor	**electronic (optical)**
Supply voltage	**10 ÷ 30 Vdc**
IP code	**IP65**

**The opening angle range may vary according to the arm position and style.*

AIR SAVING

COMPENSATION

LIGHTWEIGHT

IRREVERSIBLE

ANGLE ADJUSTMENT

OPTICAL SENSOR

COMPACT

CODIFICATION KEY

UA	B	P	80	**O**	**E**	**A**	**K**	0	
1	2	3	4	5	6	7	8	9	10

1 SERIES
UA = BLUECLAMP Power clamps air saving

2 STANDARD
B = European standard

3 VERSION
P = Pneumatic

4 SIZE
80 = Size 80 (Cylinder Ø63 mm)

5 ARM POSITION

V = 90°

O = 180°

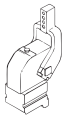

N = No arm

6 ARM STYLE
C = Central, 20 mm offset
D = Right, 20 mm offset
S = Right, 20 mm offset
E = Central, 45 mm offset
F = Central, 45 mm offset
L = Central, 45 mm offset
P = Double, 20 mm offset
N = No arm
For other versions contact our Sales Dept.

7 ARM TYPE
A = Aluminium
S = Steel
N = No arm

8 SENSOR
N = No sensor (with protection plate)
K = Electronic sensor PNP (M12) (DF-K)
J = Electronic sensor NPN (optical) (DF-J)
Y = Electronic sensor PNP (M12) (DF-Y) white LED

9 PRODUCT REVISION
Assigned by UNIVER

10 ATEX
X = ATEX option
See ATEX Catalogue for types and versions

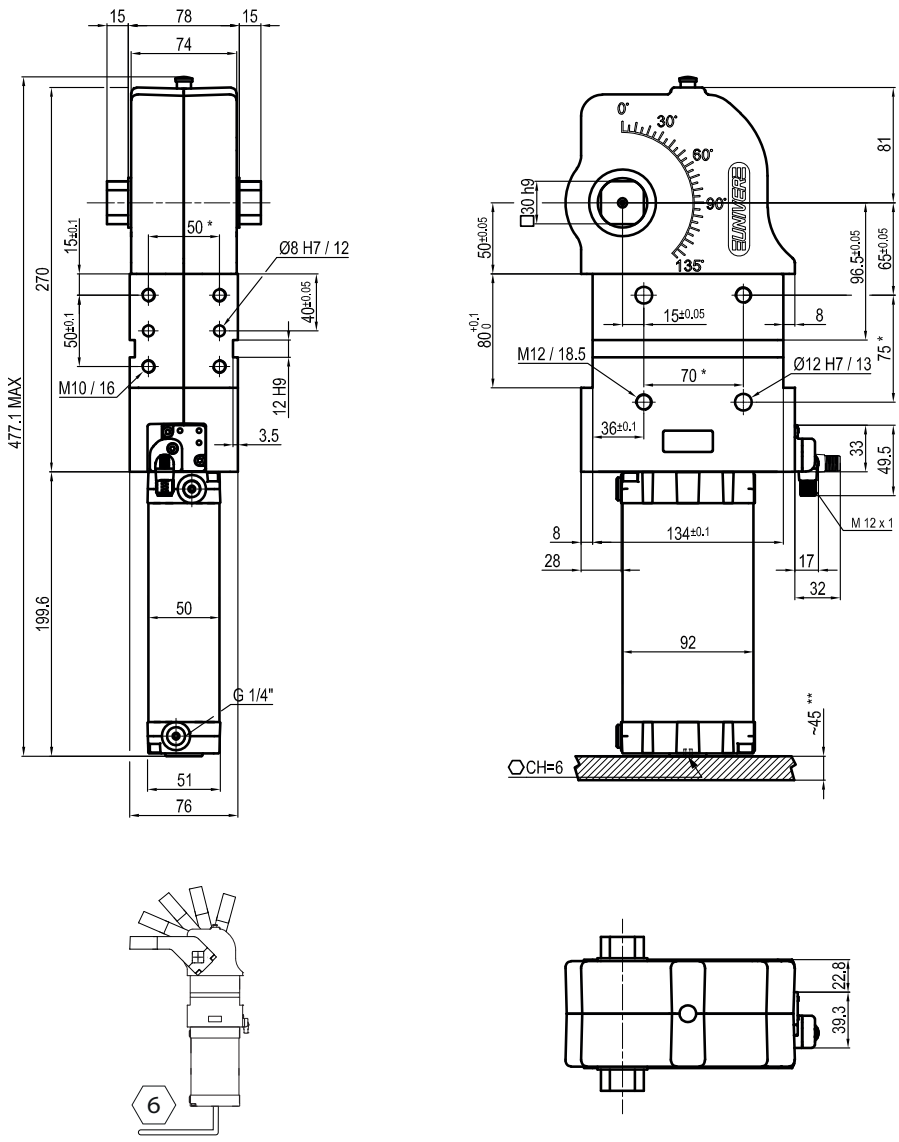

**TOLERANCE BETWEEN DOWELS ± 0,02 BETWEEN SCREW HOLES ± 0,1*
***AREA TO ACCESS ANGLE ADJUSTMENT*

Air Consumption per Cycle

Compared with standard version

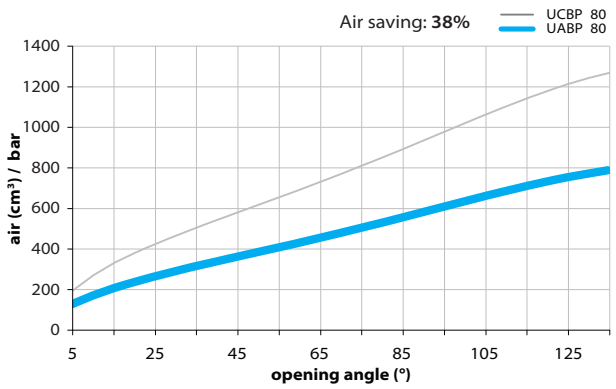

Clamping Arms

Arm Offset 20mm

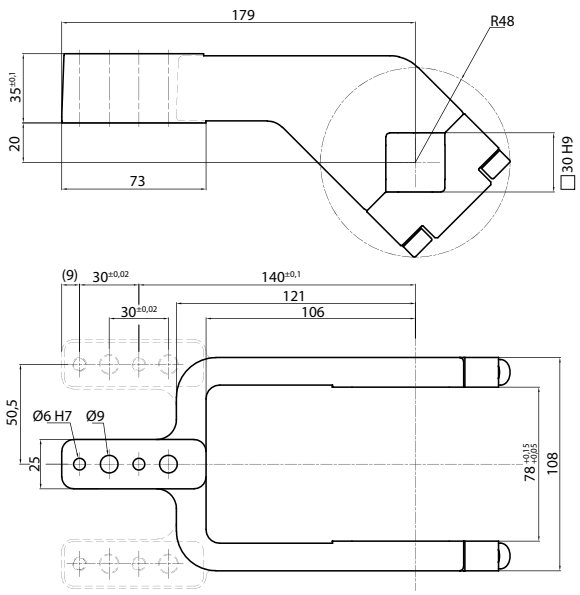

Arm Offset 45mm

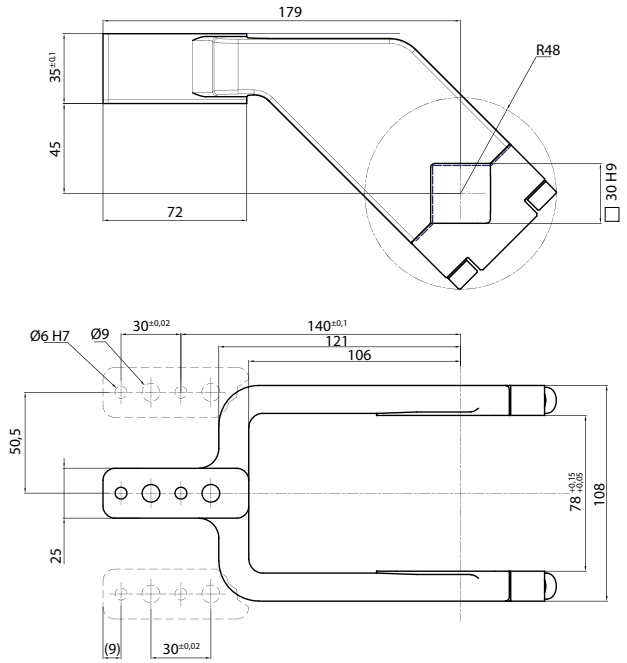

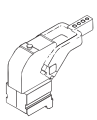

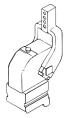

Armcode	Offset	Material	Arm style	Weight (Kg)	Opening angle (90°)	Opening angle (180°)
LKP80C	20	ALUMINIUM	CENTRAL	0,6	0÷135°	0÷105°
LKP80D	20	ALUMINIUM	RIGHT	0,6	0÷135°	0÷105°
LKP80S	20	ALUMINIUM	LEFT	0,6	0÷135°	0÷105°
UKP80CS	20	STEEL	CENTRAL	2,3	0÷135°	0÷105°
UKP80DS	20	STEEL	RIGHT	2,3	0÷135°	0÷105°
UKP80SS	20	STEEL	LEFT	2,3	0÷135°	0÷105°
UKP80E	45	ALUMINIUM	CENTRAL	0,6	0÷135°	0÷125°
UKP80F	45	ALUMINIUM	RIGHT	0,6	0÷135°	0÷125°
UKP80L	45	ALUMINIUM	LEFT	0,6	0÷135°	0÷125°
UKP80ES	45	STEEL	CENTRAL	2,2	0÷135°	0÷125°
UKP80FS	45	STEEL	RIGHT	2,2	0÷135°	0÷125°
UKP80LS	45	STEEL	LEFT	2,2	0÷135°	0÷125°

Sensors

Electronic (optical)

DF-K PNP M12
DF-J NPN M12
DF-Y PNP M12 White LED

Accessories

Self holding system

UBK46P30

UABM 40

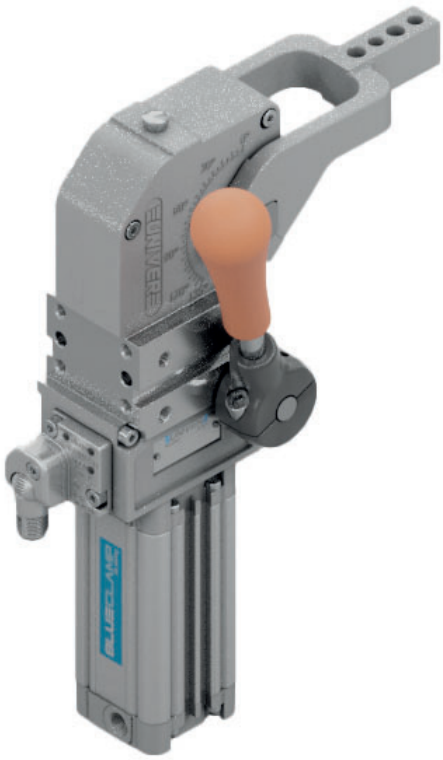

Air saving pneumatic power clamps size 40, with hand lever

AIR SAVING Pneumatic power clamps with compensation system, toggle-joint mechanism and stepless adjustable opening angle. The special construction enables a relevant reduction in air consumption, without affecting standard performances required from the market.

- Air consumption saving up to 37%
- Reduced dimensions compared to standard power clamps
- Integrated compensation
- Hand lever mount on both sides
- Fully optical electronic sensor
- Fixing pattern on 4 sides
- Manual unlocking in case of air loss
- Self-holding system for open position available
- Clamping arm in aluminium or steel

CHARACTERISTICS

Operating temperature	**5° ÷ 45° C**
Min./Max. Operating pressure	**0,4 / 0,6 MPa**
Opening angle*	**0° ÷ 95°**
Size	**40**
Cylinder bore Ø	**32 mm**
Holding moment	**600 Nm**
Clamping moment (0,5 MPa)	**125 Nm**
Weight (clamping arm not included)	**1,7 Kg**
Pneumatic supply ports	**G1/8**
Sensor	**electronic (optical)**
Supply voltage	**10 ÷ 30 Vdc**
IP code	**IP65**

**The opening angle range may vary according to the arm position and style.*

CODIFICATION KEY

AIR SAVING

COMPENSATION

LIGHTWEIGHT

IRREVERSIBLE

ANGLE ADJUSTMENT

OPTICAL SENSOR

UA	B	M	40	**O**	**E**	**A**	**K**	0	
1	2	3	4	5	6	7	8	9	10

1 SERIES
UA = BLUECLAMP Power clamps air saving

2 STANDARD
B = European standard

3 VERSION
M = Pneumatic with hand lever

4 SIZE
40 = Size 40 (Cylinder Ø32 mm)

5 ARM POSITION

V = 90°

O = 180°

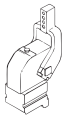

N = No arm

C = Central, 15 mm offset
D = Right, 15 mm offset
S = Right, 15 mm offset
E = Central, 45 mm offset
F = Central, 45 mm offset
L = Central, 45 mm offset
N = No arm
For other versions contact our Sales Dept.

7 ARM TYPE
A = Aluminium
S = Steel
N = No arm

8 SENSOR
N = No sensor (with protection plate)
K = Electronic sensor PNP (M12) (DF-K)
J = Electronic sensor NPN (optical) (DF-J)
Y = Electronic sensor PNP (M12) (DF-Y) white LED

9 PRODUCT REVISION
Assigned by UNIVER

10 ATEX
X = ATEX option
See ATEX Catalogue for types and versions

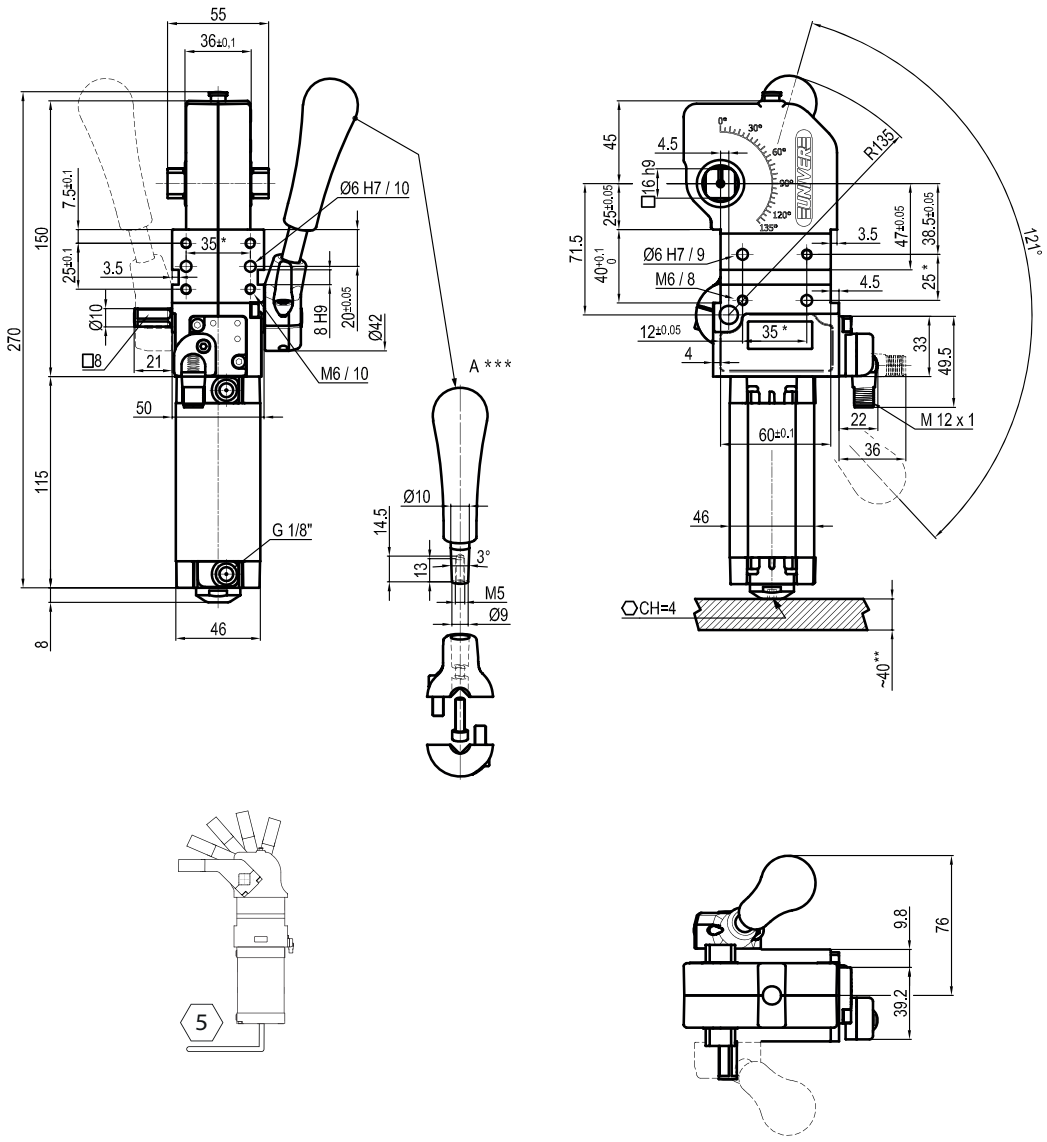

**TOLERANCE BETWEEN DOWELS ± 0,02 BETWEEN SCREW HOLES ± 0,1*
***AREA TO ACCESS ANGLE ADJUSTMENT*
****DIMENSIONS TO BE RESPECTED IN CASE OTHER MANUAL LEVERS ARE USED*

Air Consumption per Cycle

Compared with standard version

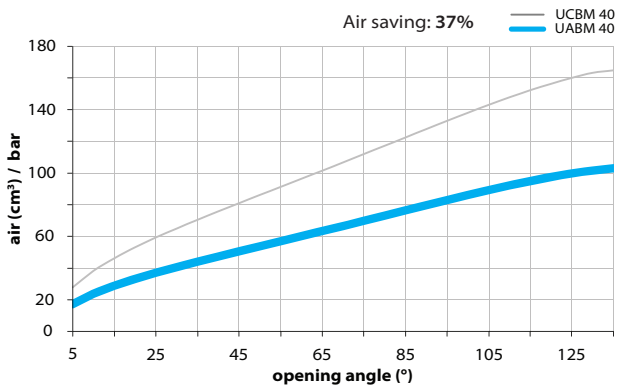

Clamping Arms

Arm Offset 15mm

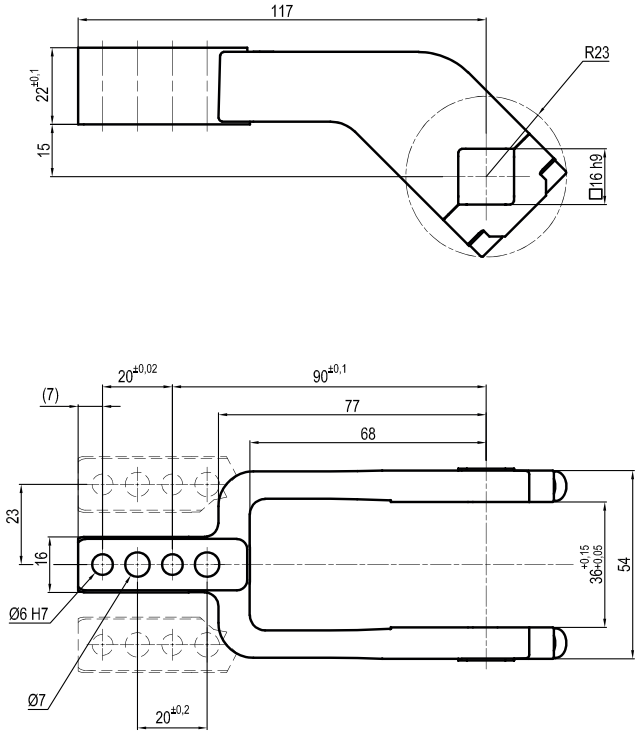

Arm Offset 45mm

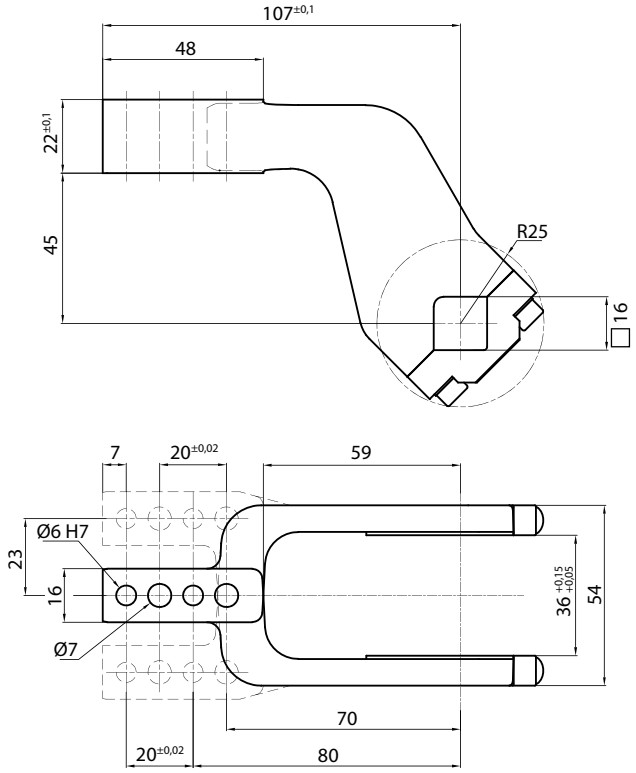

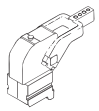

Armcode	Offset	Material	Arm style	Weight (Kg)	Opening angle (90°)	Opening angle (180°)
LKP01CST	15	ALUMINIUM	CENTRAL	0,2	0÷95°	0÷95°
LKP01DST	15	ALUMINIUM	RIGHT	0,2	0÷95°	0÷95°
LKP01SST	15	ALUMINIUM	LEFT	0,2	0÷95°	0÷95°
UP120151441S	15	STEEL	CENTRAL	0,4	0÷95°	0÷95°
UP120151442S	15	STEEL	RIGHT	0,4	0÷95°	0÷95°
UP120151443S	15	STEEL	LEFT	0,4	0÷95°	0÷95°
UKP01E	45	ALUMINIUM	CENTRAL	0,25	0÷95°	0÷95°
UKP01F	45	ALUMINIUM	RIGHT	0,25	0÷95°	0÷95°
UKP01L	45	ALUMINIUM	LEFT	0,25	0÷95°	0÷95°
UKP01ES	45	STEEL	CENTRAL	0,4	0÷95°	0÷95°
UKP01FS	45	STEEL	RIGHT	0,4	0÷95°	0÷95°
UKP01LS	45	STEEL	LEFT	0,4	0÷95°	0÷95°

Sensors

Electronic (optical)

DF-K PNP M12
DF-J NPN M12
DF-Y PNP M12 White LED

Accessories

Handlever

UBF2540

Self holding system

UBK46P16 For arm 15 offset
UBK46P16-45 For arm 45 offset

UABM 50

Air saving pneumatic power clamps size 50, with hand lever

AIR SAVING Pneumatic power clamps with compensation system, toggle-joint mechanism and stepless adjustable opening angle. The special construction enables a relevant reduction in air consumption, without affecting standard performances required from the market.

- Air consumption saving up to 35%
- Reduced dimensions compared to standard power clamps
- Integrated compensation
- Hand lever mount on both sides
- Fully optical electronic sensor
- Fixing pattern on 4 sides
- Manual unlocking in case of air loss
- Self-holding system for open position available
- Clamping arm in aluminium or steel

CHARACTERISTICS

Operating temperature	**5° ÷ 45° C**
Min./Max. Operating pressure	**0,4 / 0,6 MPa**
Opening angle*	**0° ÷ 135°**
Size	**50**
Cylinder bore Ø	**40 mm**
Holding moment	**1250 Nm**
Clamping moment (0,5 MPa)	**170 Nm**
Weight (clamping arm not included)	**3 Kg**
Pneumatic supply ports	**G1/4 on both sides**
Sensor	**electronic (optical)**
Supply voltage	**10 ÷ 30 Vdc**
IP code	**IP65**

**The opening angle range may vary according to the arm position and style.*

CODIFICATION KEY

UA	B	M	50	O	E	A	K	0	
1	2	3	4	5	6	7	8	9	10

AIR SAVING

COMPENSATION

LIGHTWEIGHT

IRREVERSIBLE

ANGLE ADJUSTMENT

OPTICAL SENSOR

COMPACT

1 SERIES
UA = BLUECLAMP Power clamps air saving

2 STANDARD
B = European standard

3 VERSION
M = Pneumatic with hand lever

4 SIZE
50 = Size 50 (Cylinder Ø40 mm)

5 ARM POSITION

V = 90°

O = 180°

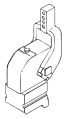

N = No arm

6 ARM STYLE
C = Central, 15 mm offset
D = Right, 15 mm offset
S = Right, 15 mm offset
E = Central, 45 mm offset
F = Central, 45 mm offset
L = Central, 45 mm offset
N = No arm
For other versions contact our Sales Dept.

7 ARM TYPE
A = Aluminium
S = Steel
N = No arm

8 SENSOR
N = No sensor (with protection plate)
K = Electronic sensor PNP (M12) (DF-K)
J = Electronic sensor NPN (optical) (DF-J)
Y = Electronic sensor PNP (M12) (DF-Y) white LED

9 PRODUCT REVISION
Assigned by UNIVER

10 ATEX
X = ATEX option
See ATEX Catalogue for types and versions

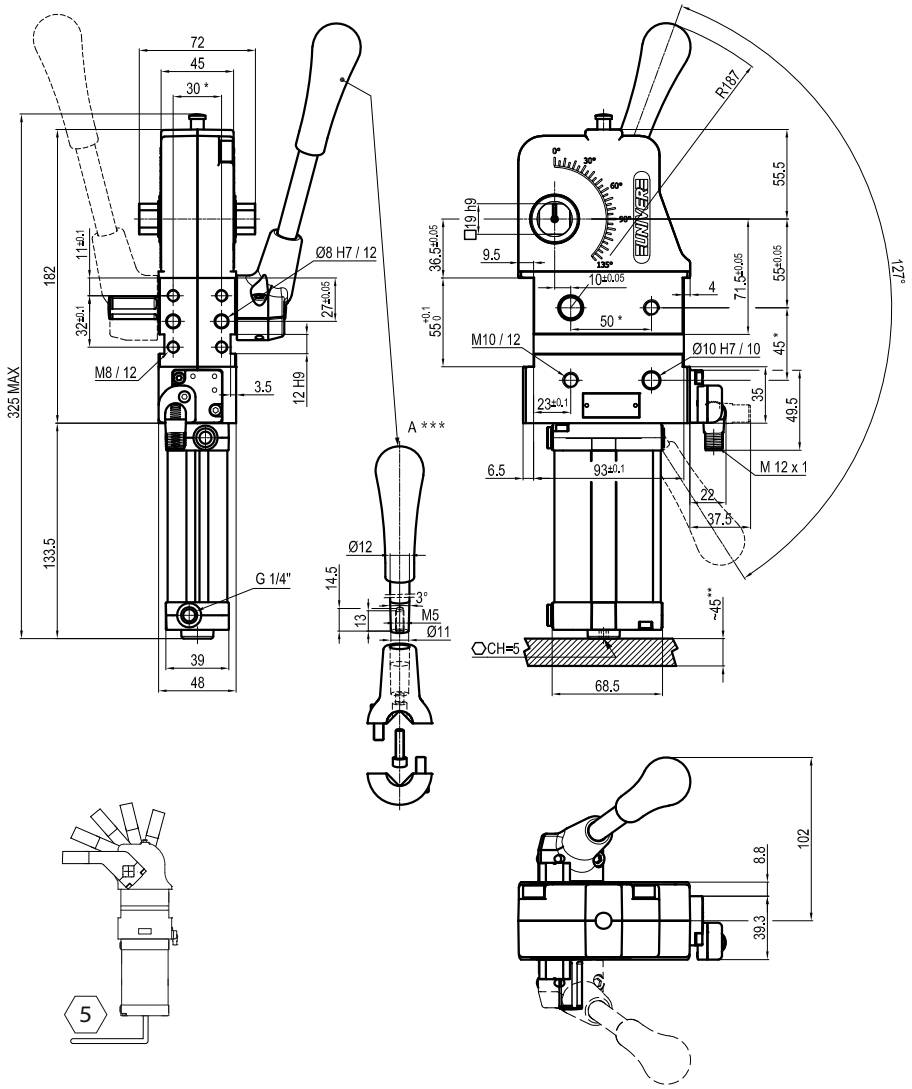

**TOLERANCE BETWEEN DOWELS ± 0,02 BETWEEN SCREW HOLES ± 0,1*
***AREA TO ACCESS ANGLE ADJUSTMENT*
****DIMENSIONS TO BE RESPECTED IN CASE OTHER MANUAL LEVERS ARE USED*

Air Consumption per Cycle

Compared with standard version

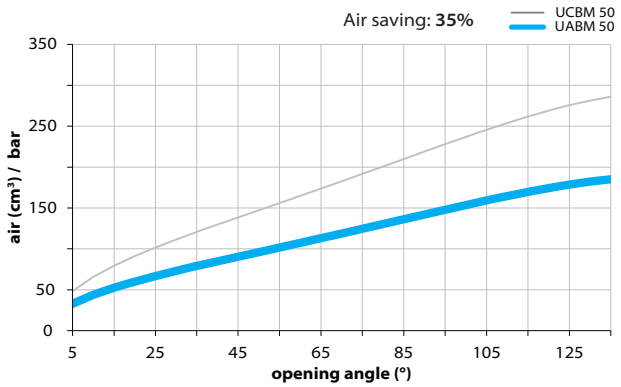

Clamping Arms

Arm Offset 15mm

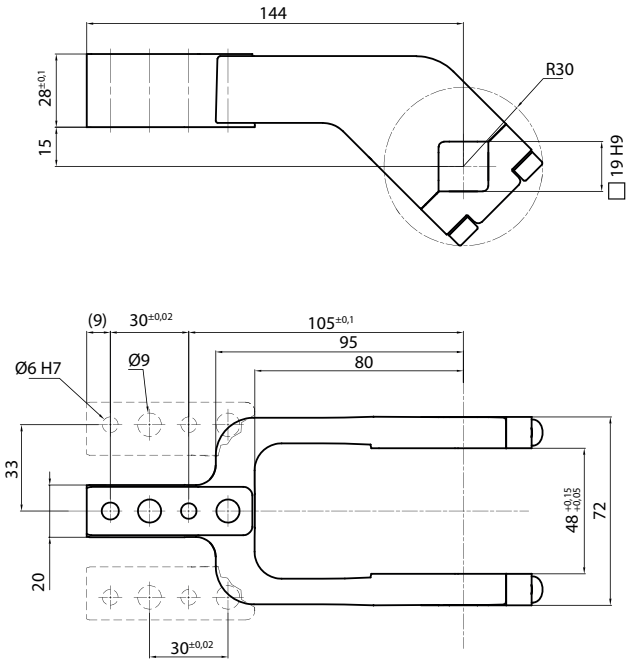

Arm Offset 45mm

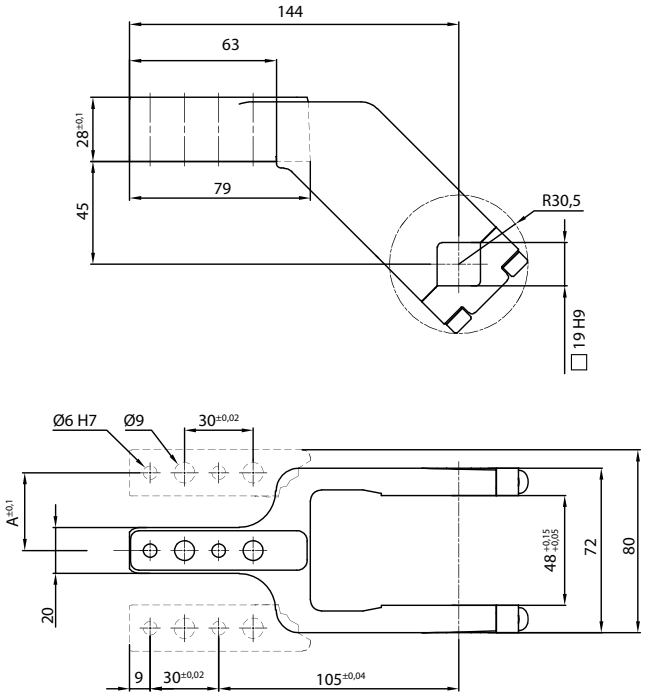

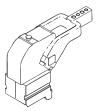

Armcode	Offset	Material	Arm style	Weight (Kg)	Opening angle (90°)	Opening angle (180°)
LKP00CL	15	ALUMINIUM	CENTRAL	0,4	0÷135°	0÷105°
LKP00DL	15	ALUMINIUM	RIGHT	0,4	0÷135°	0÷105°
LKP00SL	15	ALUMINIUM	LEFT	0,4	0÷135°	0÷105°
UP210151441G	15	STEEL	CENTRAL	0,8	0÷135°	0÷105°
UP210151442G	15	STEEL	RIGHT	0,8	0÷135°	0÷105°
UP210151443G	15	STEEL	LEFT	0,8	0÷135°	0÷105°
UKP5063E	45	ALUMINIUM	CENTRAL	0,45	0÷135°	0÷135°
UKP50F	45	ALUMINIUM	RIGHT	0,45	0÷135°	0÷135°
UKP50L	45	ALUMINIUM	LEFT	0,45	0÷135°	0÷135°
UKP5063ES	45	STEEL	CENTRAL	1,16	0÷135°	0÷135°
UKP50FS	45	STEEL	RIGHT	1,16	0÷135°	0÷135°
UKP50LS	45	STEEL	LEFT	1,16	0÷135°	0÷135°

Sensors

Electronic (optical)

DF-K PNP M12
DF-J NPN M12
DF-Y PNP M12 White LED

Accessories

Handlever

UBF255063

Self holding system

UBK46P19

UABM 63

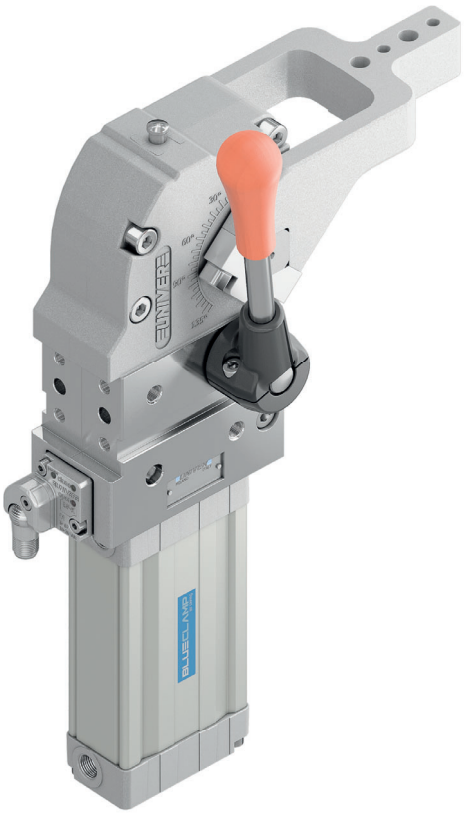

Air saving pneumatic power clamps size 63, with hand lever

AIR SAVING pneumatic power clamps with compensation system, toggle-joint mechanism and stepless adjustable opening angle. The special construction enables a relevant reduction in air consumption, without affecting standard performances required from the market.

- Air consumption saving up to 27%
- Reduced dimensions compared to standard power clamps
- Integrated compensation
- Hand lever mount on both sides
- Fully optical electronic sensor
- Fixing pattern on 4 sides
- Manual unlocking in case of air loss
- Self-holding system for open position available
- Clamping arm in aluminium or steel

CHARACTERISTICS

Operating temperature	**5° ÷ 45° C**
Min./Max. Operating pressure	**0,4 / 0,6 MPa**
Opening angle*	**0° ÷ 135°**
Size	**63**
Cylinder bore Ø	**50 mm**
Holding moment	**1750 Nm**
Clamping moment (0,5 MPa)	**380 Nm**
Weight (clamping arm not included)	**3,8 Kg**
Pneumatic supply ports	**G1/4 on both sides**
Sensor	**electronic (optical)**
Supply voltage	**10 ÷ 30 Vdc**
IP code	**IP65**

**The opening angle range may vary according to the arm position and style.*

AIR SAVING

COMPENSATION

LIGHTWEIGHT

IRREVERSIBLE

ANGLE ADJUSTMENT

OPTICAL SENSOR

COMPACT

CODIFICATION KEY

UA	B	M	63	**O**	**E**	**A**	**K**	0	
1	2	3	4	5	6	7	8	9	10

1 SERIES
UA = BLUECLAMP Power clamps air saving

2 STANDARD
B = European standard

3 VERSION
M = Pneumatic with hand lever

4 SIZE
63 = Size 63 (Cylinder Ø50 mm)

5 ARM POSITION

V = 90°

O = 180°

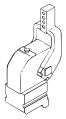

N = No arm

6 ARM STYLE
C = Central, 15 mm offset
D = Right, 15 mm offset
S = Right, 15 mm offset
E = Central, 45 mm offset
F = Central, 45 mm offset
L = Central, 45 mm offset
N = No arm
For other versions contact our Sales Dept.

7 ARM TYPE
A = Aluminium
S = Steel
N = No arm

8 SENSOR
N = No sensor (with protection plate)
K = Electronic sensor PNP (M12) (DF-K)
J = Electronic sensor NPN (optical) (DF-J)
Y = Electronic sensor PNP (M12) (DF-Y) white LED

9 PRODUCT REVISION
Assigned by UNIVER

10 ATEX
X = ATEX option
See ATEX Catalogue for types and versions

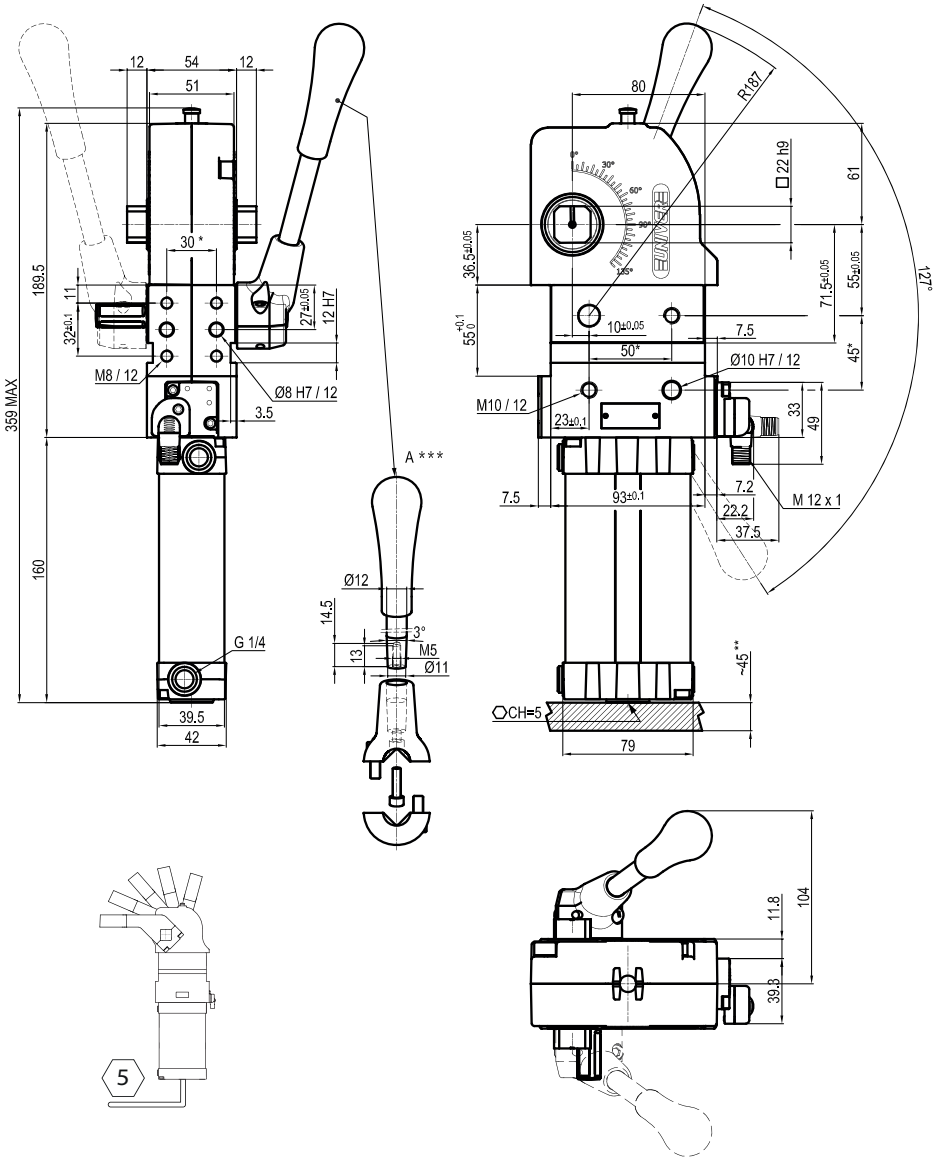

**TOLERANCE BETWEEN DOWELS ± 0,02 BETWEEN SCREW HOLES ± 0,1*
***AREA TO ACCESS ANGLE ADJUSTMENT*
****DIMENSIONS TO BE RESPECTED IN CASE OTHER MANUAL LEVERS ARE USED*

Air Consumption per Cycle

Compared with standard version

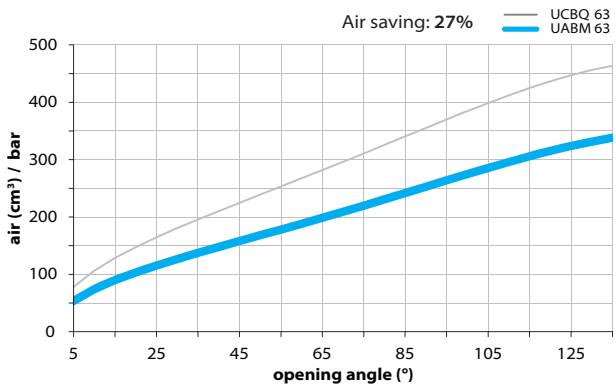

Clamping Arms

Arm Offset 15mm

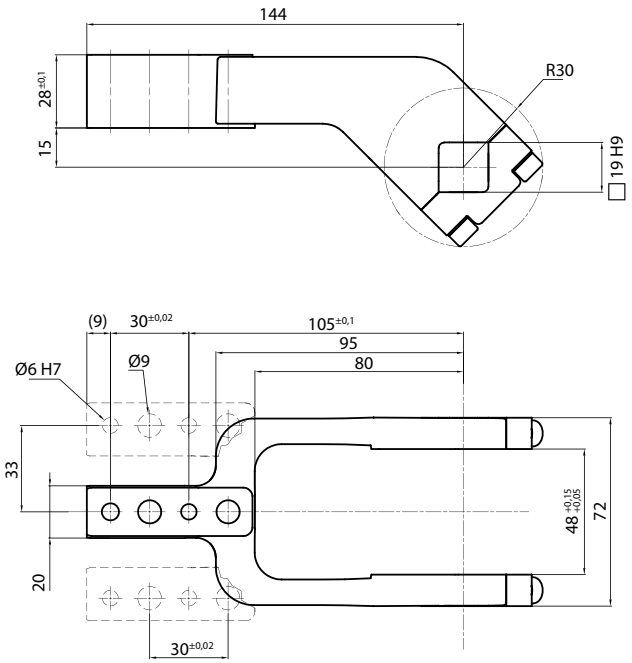

Arm Offset 45mm

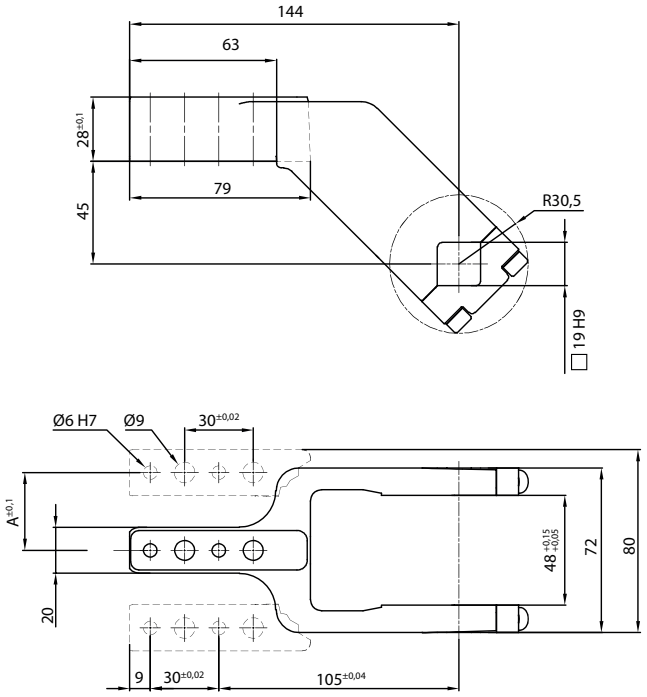

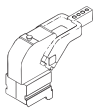

Armcode	Offset	Material	Arm style	Weight (Kg)	Opening angle (90°)	Opening angle (180°)
UP310151441A	15	ALUMINIUM	CENTRAL	0,3	0÷135°	0÷105°
UP310151442A	15	ALUMINIUM	RIGHT	0,3	0÷135°	0÷105°
UP310151443A	15	ALUMINIUM	LEFT	0,3	0÷135°	0÷105°
UP310151441S	15	STEEL	CENTRAL	1,2	0÷135°	0÷105°
UP310151442S	15	STEEL	RIGHT	1,2	0÷135°	0÷105°
UP310151443S	15	STEEL	LEFT	1,2	0÷135°	0÷105°
UP310451441A	45	ALUMINIUM	CENTRAL	0,3	0÷135°	0÷135°
UP310451442A	45	ALUMINIUM	RIGHT	0,3	0÷135°	0÷135°
UP310451443A	45	ALUMINIUM	LEFT	0,3	0÷135°	0÷135°
UP310451441S	45	STEEL	CENTRAL	1,4	0÷135°	0÷135°
UP310451442S	45	STEEL	RIGHT	1,4	0÷135°	0÷135°
UP310451443S	45	STEEL	LEFT	1,4	0÷135°	0÷135°

Sensors

Electronic (optical)

DF-K PNP M12
DF-J NPN M12
DF-Y PNP M12 White LED

Accessories

Handlever

UBF255063

Self holding system

UBK46P22

UABM 80

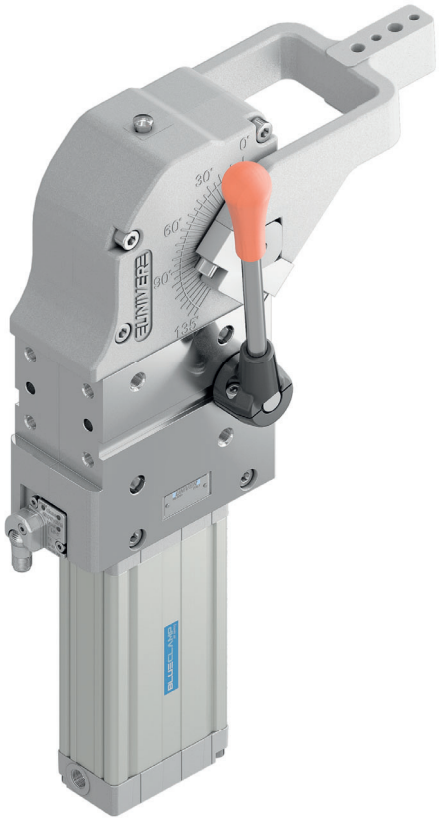

Air saving pneumatic power clamps size 80, with hand lever

AIR SAVING pneumatic power clamps with compensation system, toggle-joint mechanism and stepless adjustable opening angle. The special construction enables a relevant reduction in air consumption, without affecting standard performances required from the market.

- Air consumption saving up to 38%
- Reduced dimensions compared to standard power clamps
- Integrated compensation
- Hand lever mount on both sides
- Fully optical electronic sensor
- Fixing pattern on 4 sides
- Manual unlocking in case of air loss
- Self-holding system for open position available
- Clamping arm in aluminium or steel

CHARACTERISTICS

Operating temperature	**5° ÷ 45° C**
Min./Max. Operating pressure	**0,4 / 0,6 MPa**
Opening angle*	**0° ÷ 135°**
Size	**80**
Cylinder bore Ø	**63 mm**
Holding moment	**4000 Nm**
Clamping moment (0,5 MPa)	**880 Nm**
Weight (clamping arm not included)	**7,5 Kg**
Pneumatic supply ports	**G1/4 on both sides**
Sensor	**electronic (optical)**
Supply voltage	**10 ÷ 30 Vdc**
IP code	**IP65**

**The opening angle range may vary according to the arm position and style.*

AIR SAVING

COMPENSATION

LIGHTWEIGHT

IRREVERSIBLE

ANGLE ADJUSTMENT

OPTICAL SENSOR

COMPACT

CODIFICATION KEY

UA	B	M	80	**O**	**E**	**A**	**K**	0	
1	2	3	4	5	6	7	8	9	10

1 SERIES
UA = BLUECLAMP Power clamps air saving

2 STANDARD
B = European standard

3 VERSION
M = Pneumatic with hand lever

4 SIZE
80 = Size 80 (Cylinder Ø63 mm)

5 ARM POSITION

V = 90°

O = 180°

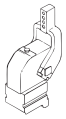

N = No arm

6 ARM STYLE
C = Central, 20 mm offset
D = Right, 20 mm offset
S = Right, 20 mm offset
E = Central, 45 mm offset
F = Central, 45 mm offset
L = Central, 45 mm offset
P = Double, 20 mm offset
N = No arm
For other versions contact our Sales Dept.

7 ARM TYPE
A = Aluminium
S = Steel
N = No arm

8 SENSOR
N = No sensor (with protection plate)
K = Electronic sensor PNP (M12) (DF-K)
J = Electronic sensor NPN (optical) (DF-J)
Y = Electronic sensor PNP (M12) (DF-Y) white LED

9 PRODUCT REVISION
Assigned by UNIVER

10 ATEX
X = ATEX option
See ATEX Catalogue for types and versions

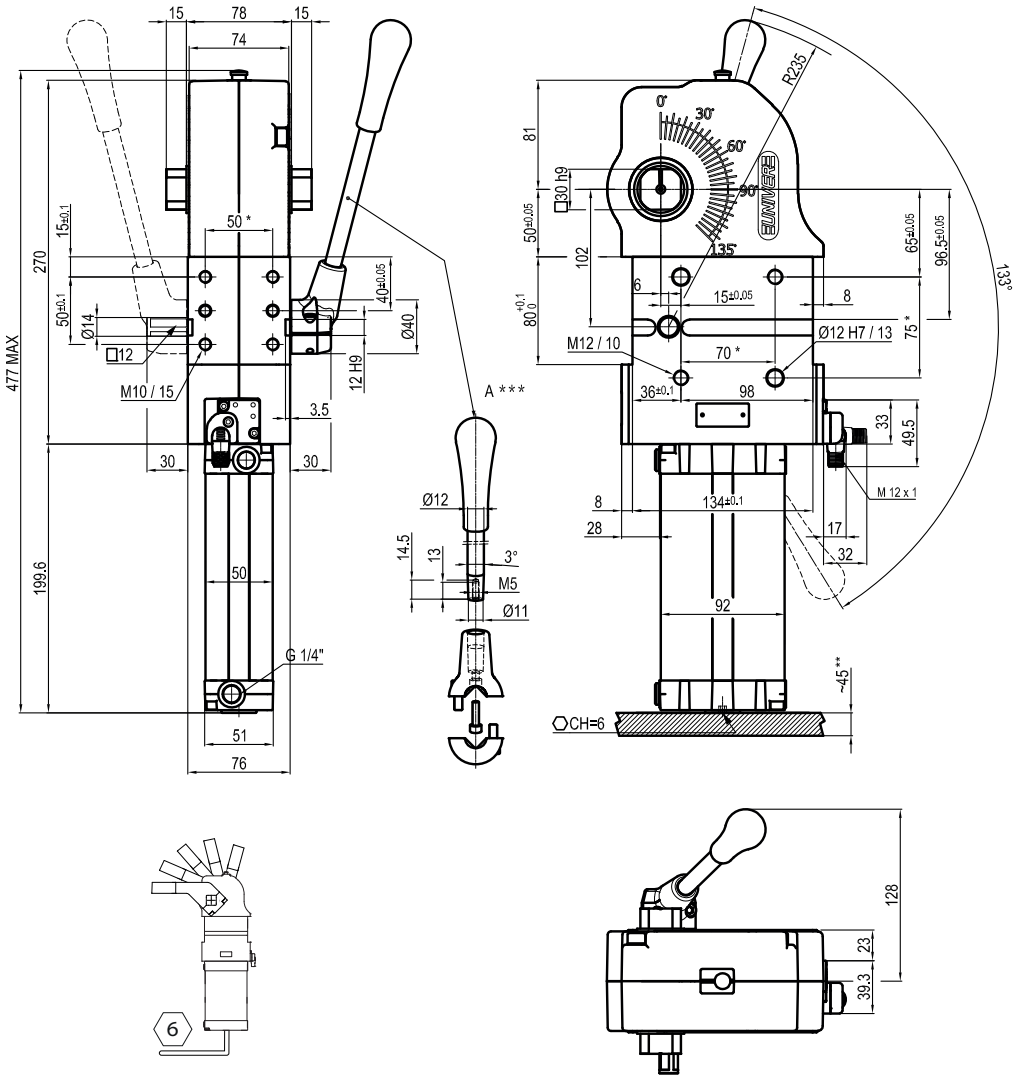

**TOLERANCE BETWEEN DOWELS ± 0,02 BETWEEN SCREW HOLES ± 0,1*
***AREA TO ACCESS ANGLE ADJUSTMENT*
****DIMENSIONS TO BE RESPECTED IN CASE OTHER MANUAL LEVERS ARE USED*

Air Consumption per Cycle

Compared with standard version

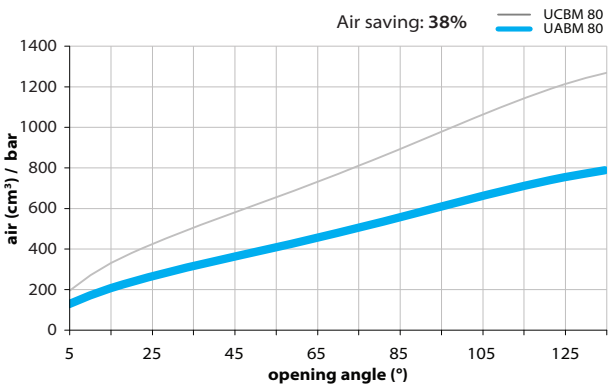

Clamping Arms

Arm Offset 20mm

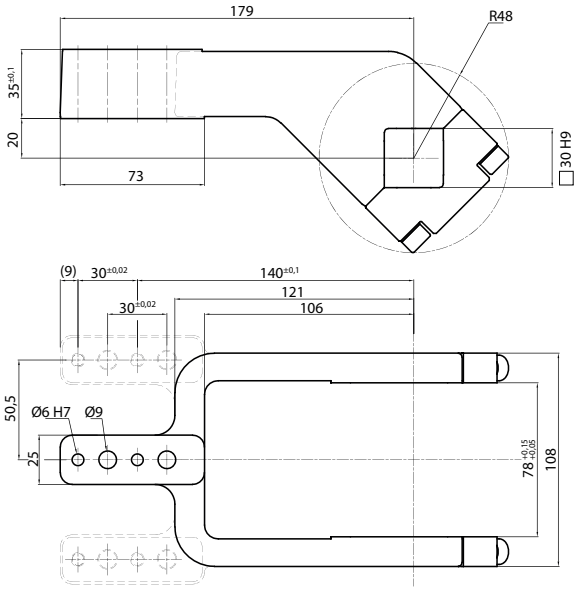

Arm Offset 45mm

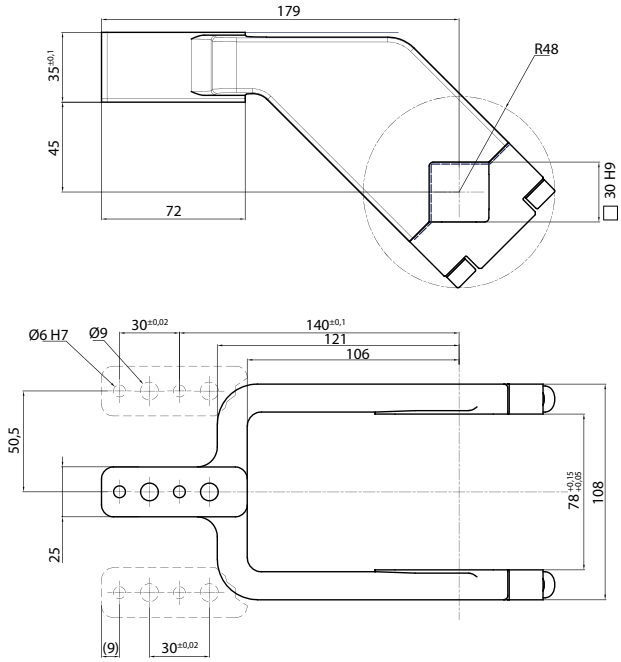

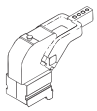

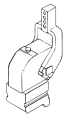

Armcode	Offset	Material	Arm style	Weight (Kg)	Opening angle (90°)	Opening angle (180°)
LKP80C	20	ALUMINIUM	CENTRAL	0,6	0÷135°	0÷105°
LKP80D	20	ALUMINIUM	RIGHT	0,6	0÷135°	0÷105°
LKP80S	20	ALUMINIUM	LEFT	0,6	0÷135°	0÷105°
UKP80CS	20	STEEL	CENTRAL	2,3	0÷135°	0÷105°
UKP80DS	20	STEEL	RIGHT	2,3	0÷135°	0÷105°
UKP80SS	20	STEEL	LEFT	2,3	0÷135°	0÷105°
UKP80E	45	ALUMINIUM	CENTRAL	0,6	0÷135°	0÷125°
UKP80F	45	ALUMINIUM	RIGHT	0,6	0÷135°	0÷125°
UKP80L	45	ALUMINIUM	LEFT	0,6	0÷135°	0÷125°
UKP80ES	45	STEEL	CENTRAL	2,2	0÷135°	0÷125°
UKP80FS	45	STEEL	RIGHT	2,2	0÷135°	0÷125°
UKP80LS	45	STEEL	LEFT	2,2	0÷135°	0÷125°

Sensors

Electronic (optical)

DF-K PNP M12
DF-J NPN M12
DF-Y PNP M12 White LED

Accessories

Handlever

UBF2580

Self holding system

UBK46P30

UANP 50

Air saving pneumatic power clamps conforming to the NAAMS standard, size 50

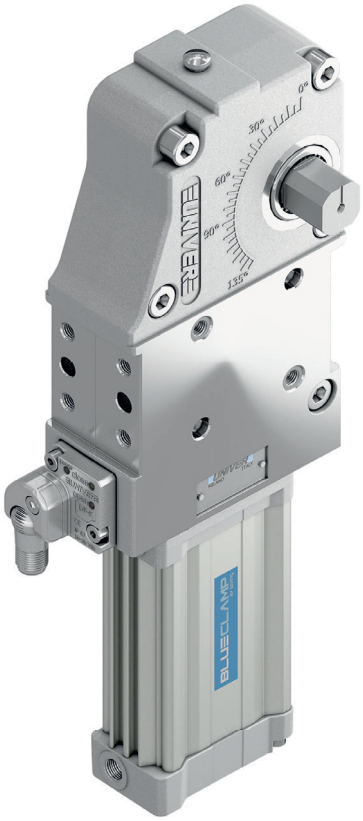

AIR SAVING pneumatic power clamps size 50, conforming to the NAAMS standard, with compensation system, toggle-joint mechanism and stepless adjustable opening angle.
The special construction enables a relevant reduction in air consumption, without affecting standard performances required from the market.

- Air consumption saving up to 35%
- Reduced dimensions compared to standard power clamps
- Integrated compensation
- Version with hand lever available
- Fully optical electronic sensor
- Fixing pattern on 4 sides
- Manual unlocking in case of air loss
- Drive shaft for wishbone or blade arms

GLOBAL STANDARD COMPONENTS NAAMS

CHARACTERISTICS

Operating temperature	**5° ÷ 45° C**
Min./Max. Operating pressure	**0,4/0,6 Mpa**
Opening angle*	**0° ÷ 135°**
Size	**50**
Cylinder bore Ø	**40 mm**
Holding moment	**1250 Nm**
Clamping moment (0,5 MPa)	**170 Nm**
Weight (clamping arm not included)	**2,3 Kg**
Pneumatic supply ports	**1/4 on both sides**
Sensor	**electronic (optical**
Supply voltage	**10 ÷ 30 Vdc**
IP code	**IP65**

**The opening angle range may vary according to the arm position and style.*

AIR SAVING

COMPENSATION

LIGHTWEIGHT

IRREVERSIBLE

ANGLE ADJUSTMENT

OPTICAL SENSOR

COMPACT

CODIFICATION KEY

UA	N	P	50	N	**N**	**K**	**G**	0	
1	2	3	4	5	6	7	8	9	10

1 SERIES
UA = BLUECLAMP Power clamps air saving

2 STANDARD
N = NAAMS Standard

3 VERSION
P = Pneumatic

4 SIZE
50 = Size 50 (Cylinder Ø40 mm)

5 ARM POSITION
N = No arm

For clamping arms according to NAAMS standard, please contact our Sales Dept.

6 SQUARE SHAFT
R = Right side only
L = Left side only
N = Both sides

7 SENSOR
N = No sensor (with protection plate)
K = Electronic sensor PNP, M12 (DF-K)

8 PORT THREAD
G = Gas

9 PRODUCT REVISION
Assigned by UNIVER

10 ATEX
X = ATEX option
See ATEX Catalogue for types and versions

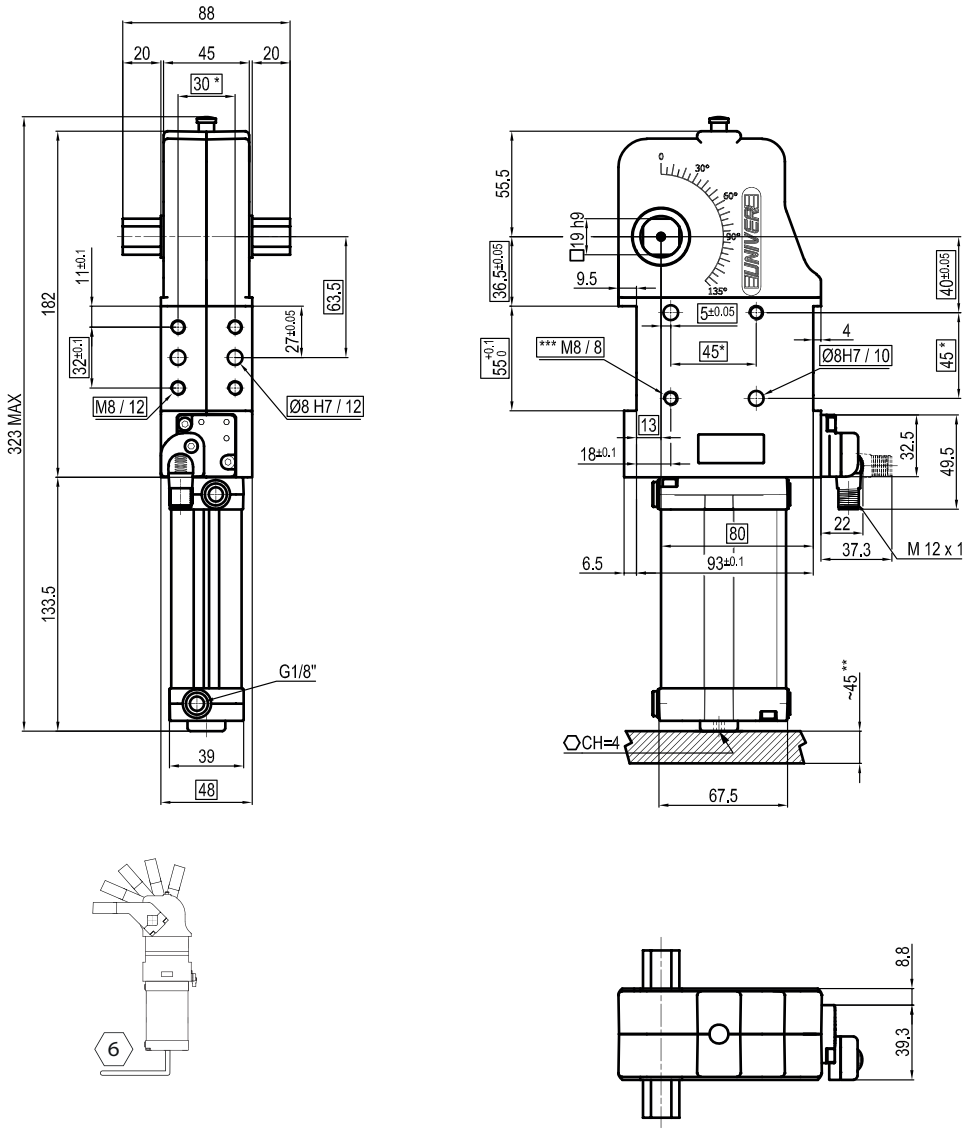

**TOLERANCE BETWEEN DOWELS ± 0,02 BETWEEN SCREW HOLES ± 0,1*
***AREA TO ACCESS ANGLE ADJUSTMENT*
****SCREW THREAD INSERT*

Air Consumption per Cycle

Compared with standard version

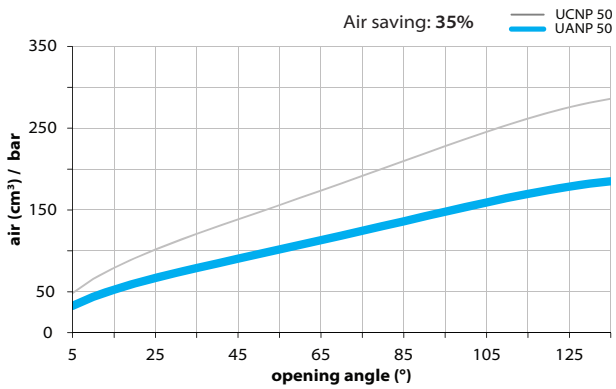

Sensors

Electronic (optical)

DF-K PNP M12
DF-J NPN M12
DF-Y PNP M12 White LED

Accessories

Self holding system

UBK46P19N For blade arms
UBK46P19ND For wishbone arms

UANP 63

Air saving pneumatic power clamps conforming to the NAAMS standard, size 63

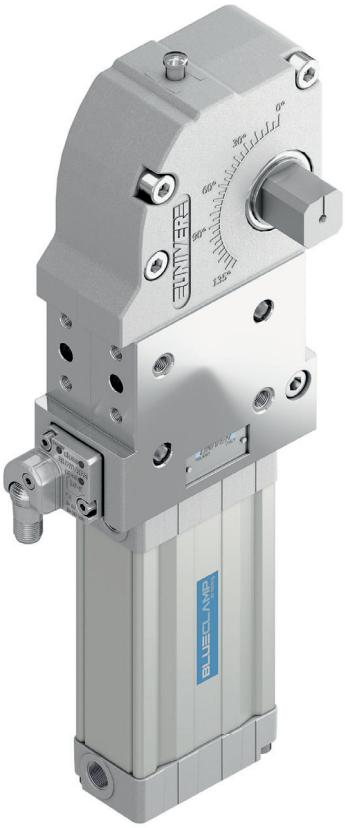

AIR SAVING pneumatic power clamps size 63, conforming to the NAAMS standard, with compensation system, toggle-joint mechanism and stepless adjustable opening angle.
The special construction enables a relevant reduction in air consumption, without affecting standard performances required from the market.

- Air consumption saving up to 38%
- Reduced dimensions compared to standard power clamps
- Integrated compensation
- Version with hand lever available
- Fully optical electronic sensor
- Fixing pattern on 4 sides
- Manual unlocking in case of air loss
- Drive shaft for wishbone or blade arms

CHARACTERISTICS

Operating temperature	**5° ÷ 45° C**
Min./Max. Operating pressure	**0,4/0,6 Mpa**
Opening angle*	**0° ÷ 135°**
Size	**63**
Cylinder bore Ø	**50 mm**
Holding moment	**1750 Nm**
Clamping moment (0,5 MPa)	**380 Nm**
Weight (clamping arm not included)	**3,2 Kg**
Pneumatic supply ports	**1/4 on both sides**
Sensor	**electronic (optical)**
Supply voltage	**10 ÷ 30 Vdc**
IP code	**IP65**

**The opening angle range may vary according to the arm position and style.*

GLOBAL STANDARD COMPONENTS NAAMS

AIR SAVING

COMPENSATION

LIGHTWEIGHT

IRREVERSIBLE

ANGLE ADJUSTMENT

OPTICAL SENSOR

COMPACT

CODIFICATION KEY

UA	N	P	63	N	**N**	**K**	**G**	0	
1	2	3	4	5	6	7	8	9	10

1 SERIES
UA = BLUECLAMP Power clamps air saving

2 STANDARD
N = NAAMS Standard

3 VERSION
P = Pneumatic

4 SIZE
63 = Size 63 (Cylinder Ø50 mm)

5 ARM POSITION
N = No arm

For clamping arms according to NAAMS standard, please contact our Sales Dept.

6 SQUARE SHAFT
R = Right side only
L = Left side only
N = Both sides

7 SENSOR
N = No sensor (with protection plate)
K = Electronic sensor PNP, M12 (DF-K)

8 PORT THREAD
G = Gas
N= NTP

9 PRODUCT REVISION
Assigned by UNIVER

10 ATEX
X = ATEX option
See ATEX Catalogue for types and versions

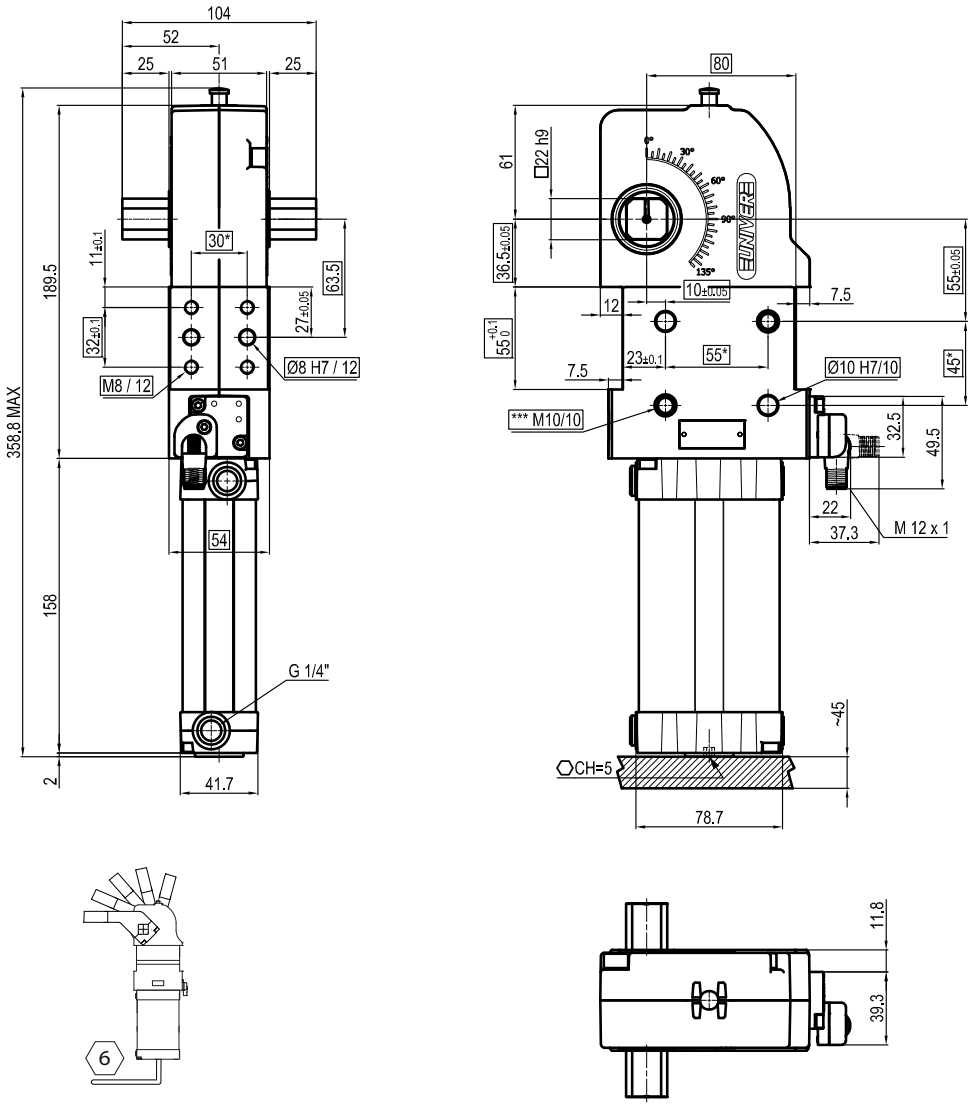

**TOLERANCE BETWEEN DOWELS ± 0,02 BETWEEN SCREW HOLES ± 0,1*
***AREA TO ACCESS ANGLE ADJUSTMENT*
****SCREW THREAD INSERT*

Air Consumption per Cycle

Compared with standard version

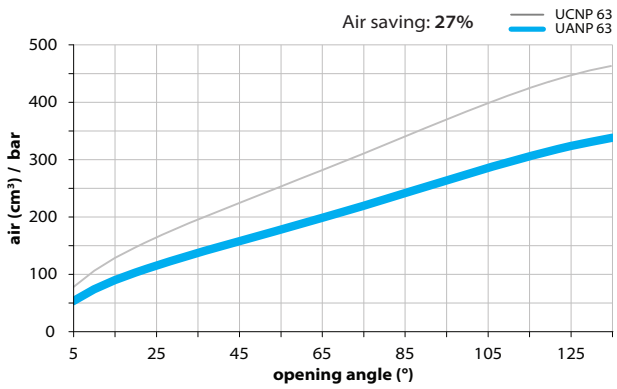

Sensors

Electronic (optical)

DF-K PNP M12
DF-J NPN M12
DF-Y PNP M12 White LED

Accessories

Self holding system

UBK46P22N For blade arms
UBK46P22ND For wishbone arms

UANP 80

Air saving pneumatic power clamps conforming to the NAAMS standard, size 80

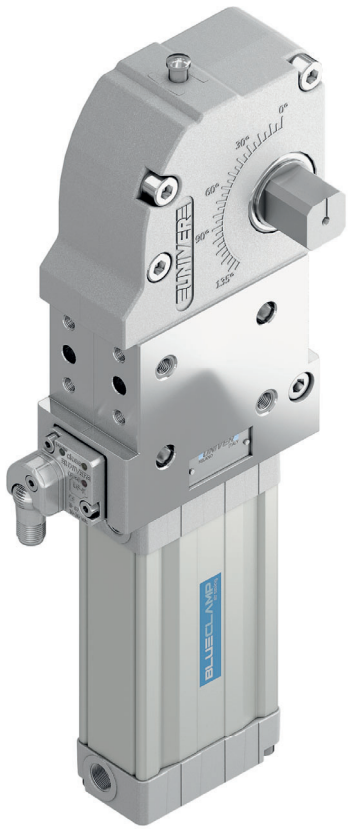

AIR SAVING pneumatic power clamps size 80, conforming to the NAAMS standard, with compensation system, toggle-joint mechanism and stepless adjustable opening angle.
The special construction enables a relevant reduction in air consumption, without affecting standard performances required from the market.

- Air consumption saving up to 38%
- Reduced dimensions compared to standard power clamps
- Integrated compensation
- Version with hand lever available
- Fully optical electronic sensor or pneumatic sensor
- Fixing pattern on 4 sides
- Manual unlocking in case of air loss
- Drive shaft for wishbone or blade arms

CHARACTERISTICS

Operating temperature	**5° ÷ 45° C**
Min./Max. Operating pressure	**0,4/0,6 Mpa**
Opening angle*	**0° ÷ 135°**
Size	**80**
Cylinder bore Ø	**63 mm**
Holding moment	**4000 Nm**
Clamping moment (0,5 MPa)	**880 Nm**
Weight (clamping arm not included)	**7 Kg**
Pneumatic supply ports	**1/4 on both sides**
Sensor	**electronic (optical)**
Supply voltage	**10 ÷ 30 Vdc**
IP code	

**The opening angle range may vary according to the arm position and style.*

GLOBAL STANDARD COMPONENTS NAAMS

AIR SAVING

COMPENSATION

LIGHTWEIGHT

IRREVERSIBLE

ANGLE ADJUSTMENT

OPTICAL SENSOR

COMPACT

CODIFICATION KEY

UA	N	P	80	N	**N**	**K**	**G**	0	
1	2	3	4	5	6	7	8	9	10

1 SERIES
UA = BLUECLAMP Power clamps air saving

2 STANDARD
N = NAAMS Standard

3 VERSION
P = Pneumatic

4 SIZE
80 = Size 80 (Cylinder Ø63 mm)

5 ARM POSITION
N = No arm

For clamping arms according to NAAMS standard, please contact our Sales Dept.

6 SQUARE SHAFT
R = Right side only
L = Left side only
N = Both sides

7 SENSOR
N = No sensor (with protection plate)
K = Electronic sensor PNP, M12 (DF-K)

8 PORT THREAD
G = Gas
N = NTP

9 PRODUCT REVISION
Assigned by UNIVER

10 ATEX
X = ATEX option
See ATEX Catalogue for types and versions

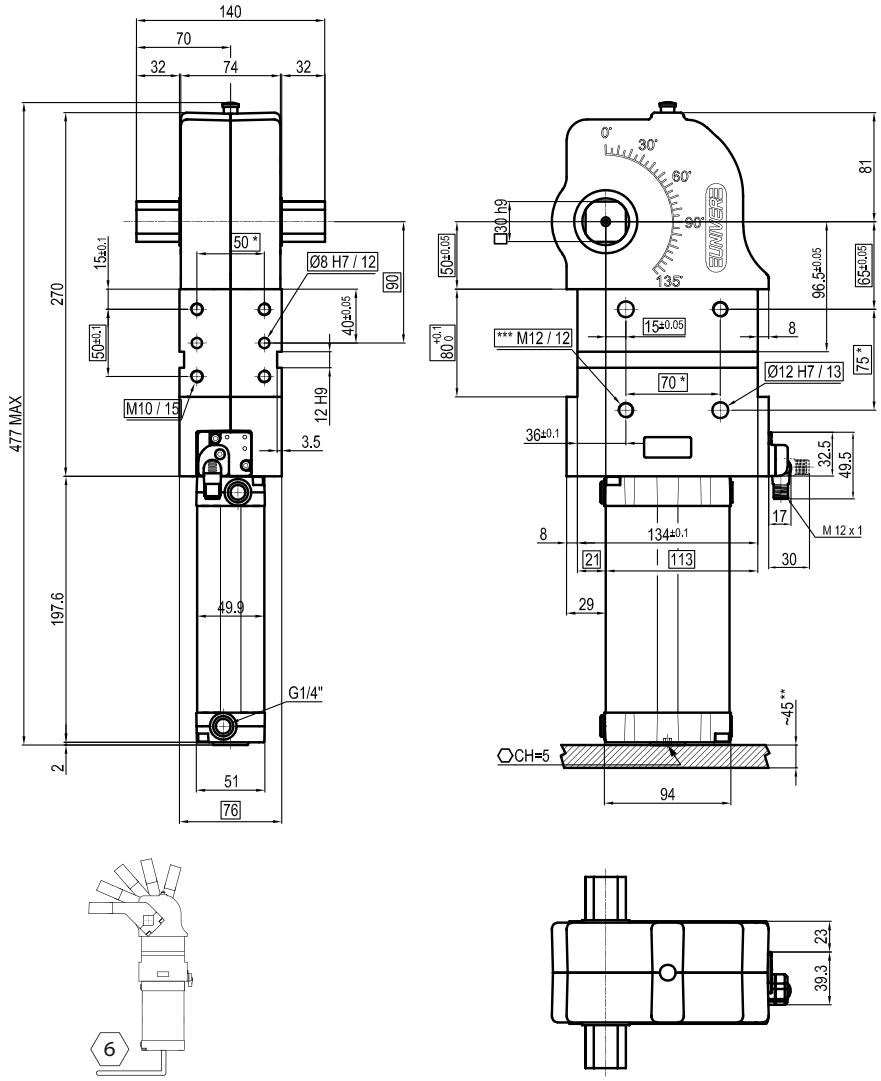

**TOLERANCE BETWEEN DOWELS ± 0,02 BETWEEN SCREW HOLES ± 0,1*
***AREA TO ACCESS ANGLE ADJUSTMENT*
****SCREW THREAD INSERT*

Air Consumption per Cycle

Compared with standard version

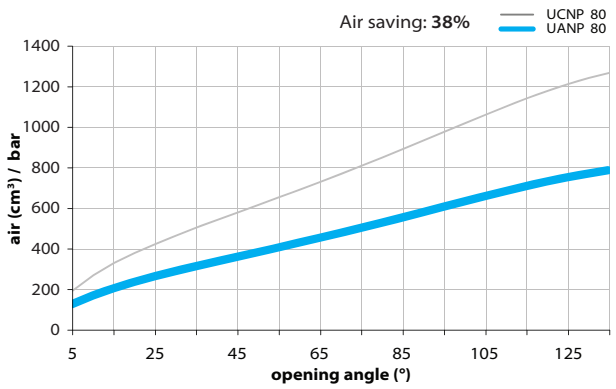

Sensors

Electronic (optical)

DF-K PNP M12
DF-J NPN M12
DF-Y PNP M12 White LED

Accessories

Self holding system

UBK46P30N For blade arms
UBK46P30ND For wishbone arms

UANM 50

Air saving pneumatic power clamps conforming to the NAAMS standard, size 50 with hand lever

AIR SAVING pneumatic power clamps size 50, conforming to the NAAMS standard, with compensation system, toggle-joint mechanism and stepless adjustable opening angle. The special construction enables a relevant reduction in air consumption, without affecting standard performances required from the market.

- Air consumption saving up to 35%
- Reduced dimensions compared to standard power clamps
- Integrated compensation
- Hand lever mount on both sides
- Fully optical electronic sensor
- Fixing pattern on 4 sides
- Manual unlocking in case of air loss

CHARACTERISTICS

Operating temperature	**5° ÷ 45° C**
Min./Max. Operating pressure	**0,4/0,6 Mpa**
Opening angle*	**0° ÷ 135°**
Size	**50**
Cylinder bore Ø	**40 mm**
Holding moment	**1250 Nm**
Clamping moment (0,5 MPa)	**170 Nm**
Weight (clamping arm not included)	**3 Kg**
Pneumatic supply ports	**1/4 on both sides**
Sensor	**electronic (optical)**
Supply voltage	**10 ÷ 30 Vdc**
IP code	**IP65**

**The opening angle range may vary according to the arm position and style.*

GLOBAL STANDARD COMPONENTS NAAMS

AIR SAVING

COMPENSATION

LIGHTWEIGHT

IRREVERSIBLE

ANGLE ADJUSTMENT

OPTICAL SENSOR

COMPACT

CODIFICATION KEY

UA	N	M	50	N	**N**	**K**	**G**	0	
1	2	3	4	5	6	7	8	9	10

1 SERIES
UA = BLUECLAMP Power clamps air saving

2 STANDARD
N = NAAMS Standard

3 VERSION
M = Pneumatic with hand lever

4 SIZE
50 = Size 50 (Cylinder Ø40 mm)

5 ARM POSITION
N = No arm

For clamping arms according to NAAMS standard, please contact our Sales Dept.

6 SQUARE SHAFT
R = Right side only
L = Left side only
N = Both sides

7 SENSOR
N = No sensor (with protection plate)
K = Electronic sensor PNP, M12 (DF-K)

8 PORT THREAD
G = Gas

9 PRODUCT REVISION
Assigned by UNIVER

10 ATEX
X = ATEX option
See ATEX Catalogue for types and versions

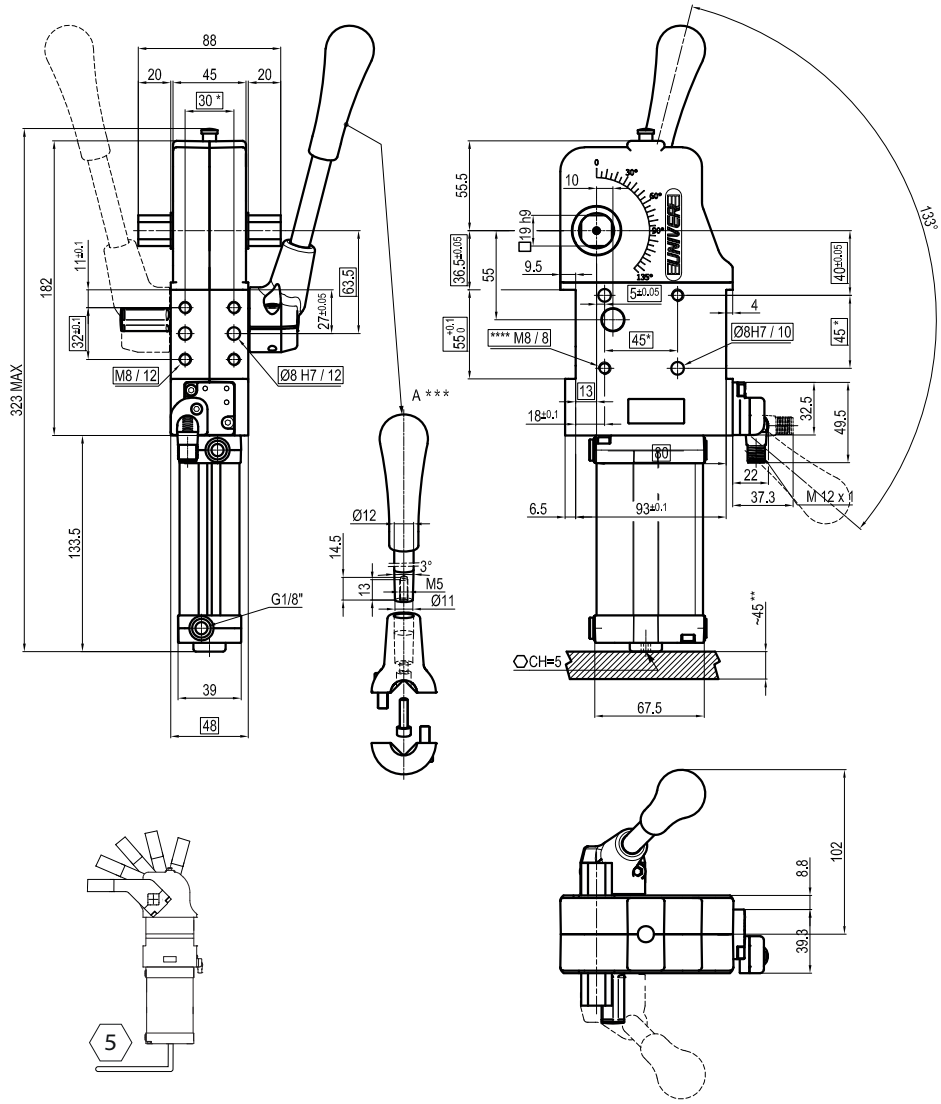

**TOLERANCE BETWEEN DOWELS ± 0,02 BETWEEN SCREW HOLES ± 0,1*
***AREA TO ACCESS ANGLE ADJUSTMENT*
****DIMENSIONS TO BE RESPECTED IN CASE OTHER MANUAL LEVERS ARE USED*
*****SCREW THREAD INSERT*

Air Consumption per Cycle

Compared with standard version

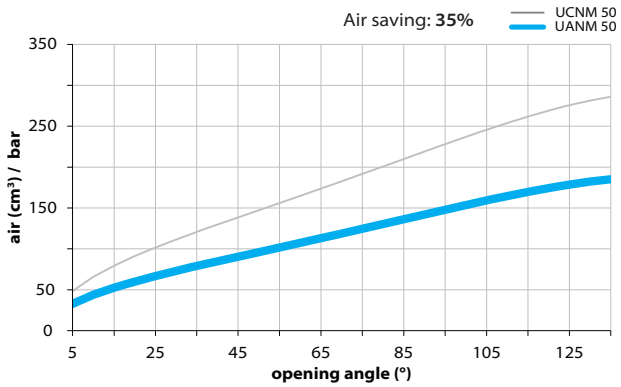

Sensors

Electronic (optical)

DF-K PNP M12
DF-J NPN M12
DF-Y PNP M12 White LED

Accessories

Handlever

UBF255063

Self holding system

UBK46P19N For blade arms
UBK46P19ND For wishbone arms

UANM 63

Air saving pneumatic power clamps conforming to the NAAMS standard, size 63 with hand lever

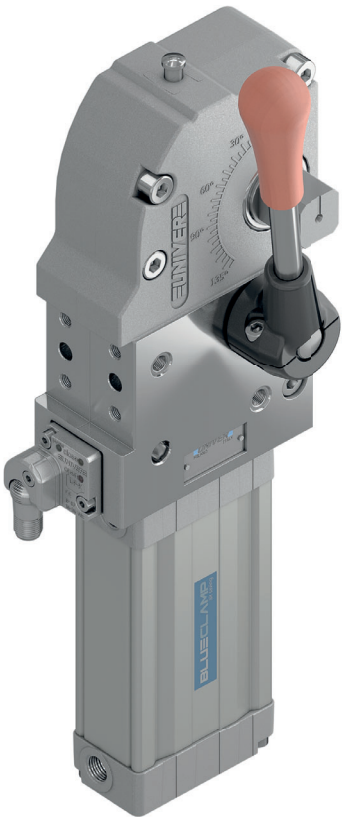

AIR SAVING pneumatic power clamps size Ø63, conforming to the NAAMS standard, with compensation system, toggle-joint mechanism and stepless adjustable opening angle.
The special construction enables a relevant reduction in air consumption, without affecting standard performances required from the market.

- Air consumption saving up to 27%
- Reduced dimensions compared to standard power clamps
- Integrated compensation
- Hand lever mount on both sides
- Fully optical electronic sensor
- Fixing pattern on 4 sides
- Manual unlocking in case of air loss
- Drive shaft for wishbone or blade arms

CHARACTERISTICS

Operating temperature	**5° ÷ 45° C**
Min./Max. Operating pressure	**0,4/0,6 Mpa**
Opening angle*	**0° ÷ 135°**
Size	**63**
Cylinder bore Ø	**50 mm**
Holding moment	**1750 Nm**
Clamping moment (0,5 MPa)	**380 Nm**
Weight (clamping arm not included)	**3,8 Kg**
Pneumatic supply ports	**1/4 on both sides**
Sensor	**electronic (optical)**
Supply voltage	**10 ÷ 30 Vdc**
IP code	**IP65**

**The opening angle range may vary according to the arm position and style.*

GLOBAL STANDARD COMPONENTS NAAMS

AIR SAVING

COMPENSATION

LIGHTWEIGHT

IRREVERSIBLE

ANGLE ADJUSTMENT

OPTICAL SENSOR

COMPACT

CODIFICATION KEY

UA	N	M	63	N	**N**	**K**	**G**	0	
1	2	3	4	5	6	7	8	9	10

1 SERIES
UA = BLUECLAMP Power clamps air saving

2 STANDARD
N = NAAMS Standard

3 VERSION
M = Pneumatic with hand lever

4 SIZE
63 = Size 63 (Cylinder Ø50 mm)

5 ARM POSITION
N = No arm

For clamping arms according to NAAMS standard, please contact our Sales Dept.

6 SQUARE SHAFT
R = Right side only
L = Left side only
N = Both sides

7 SENSOR
N = No sensor (with protection plate)
K = Electronic sensor PNP, M12 (DF-K)

8 PORT THREAD
G = Gas
N = NTP

9 PRODUCT REVISION
Assigned by UNIVER

10 ATEX
X = ATEX option
See ATEX Catalogue for types and versions

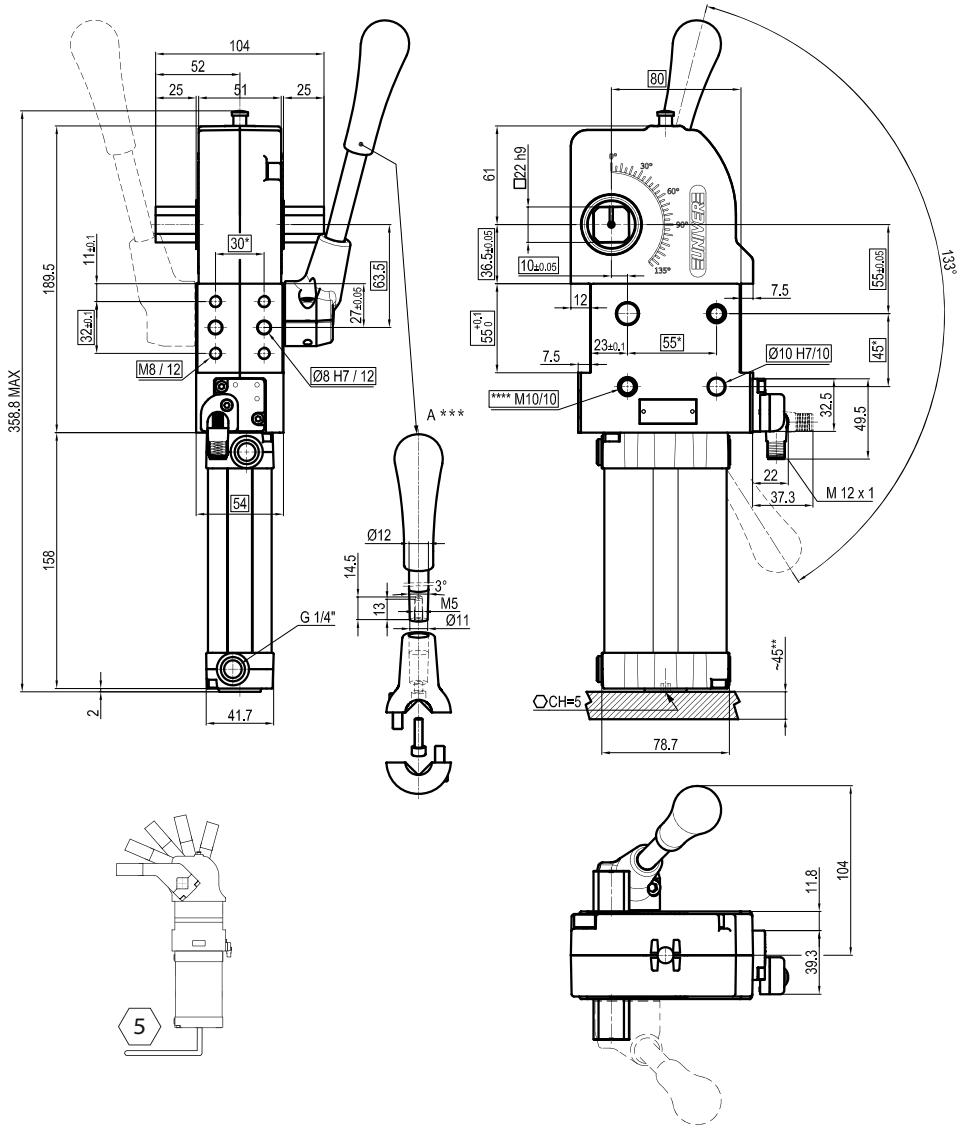

**TOLERANCE BETWEEN DOWELS ± 0,02 BETWEEN SCREW HOLES ± 0,1*
***AREA TO ACCESS ANGLE ADJUSTMENT*
****DIMENSIONS TO BE RESPECTED IN CASE OTHER MANUAL LEVERS ARE USED*
*****SCREW THREAD INSERT*

Air Consumption per Cycle

Compared with standard version

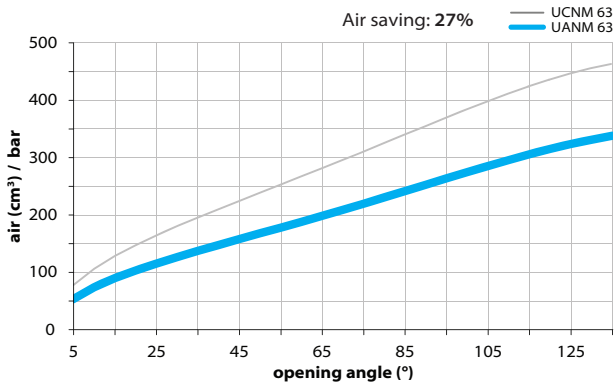

Sensors

Electronic (optical)

DF-K PNP M12
DF-J NPN M12
DF-Y PNP M12 White LED

Accessories

Handlever

UBF255063

Self holding system

UBK46P22N For blade arms
UBK46P22ND For wishbone arms

UANM 80

Air saving pneumatic power clamps conforming to the NAAMS standard, size 80 with hand lever

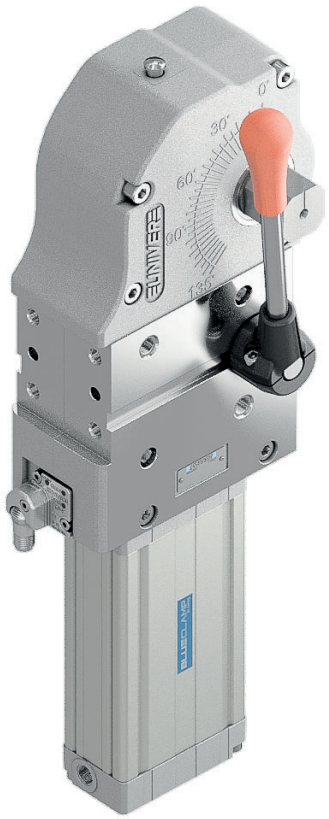

AIR SAVING pneumatic power clamps size 80, conforming to the NAAMS standard, with compensation system, toggle-joint mechanism and stepless adjustable opening angle. The special construction enables a relevant reduction in air consumption, without affecting standard performances required from the market.

- Air consumption saving up to 38%
- Reduced dimensions compared to standard power clamps
- Integrated compensation
- Hand lever mount on both sides
- Fully optical electronic sensor
- Fixing pattern on 4 sides
- Manual unlocking in case of air loss
- Drive shaft for wishbone or blade arms

CHARACTERISTICS

Operating temperature	**5° ÷ 45° C**
Min./Max. Operating pressure	**0,4/0,6 Mpa**
Opening angle*	**0° ÷ 135°**
Size	**80**
Cylinder bore Ø	**63 mm**
Holding moment	**4000 Nm**
Clamping moment (0,5 MPa)	**880 Nm**
Weight (clamping arm not included)	**7,5 Kg**
Pneumatic supply ports	**1/4 on both sides**
Sensor	**electronic (optical)**
Supply voltage	**10 ÷ 30 Vdc**
IP code	

**The opening angle range may vary according to the arm position and style.*

GLOBAL STANDARD COMPONENTS NAAMS

AIR SAVING

COMPENSATION

LIGHTWEIGHT

IRREVERSIBLE

ANGLE ADJUSTMENT

OPTICAL SENSOR

COMPACT

CODIFICATION KEY

UA	N	M	80	N	**N**	**K**	**G**	0	
1	2	3	4	5	6	7	8	9	10

1 SERIES
UA = BLUECLAMP Power clamps air saving

2 STANDARD
N = NAAMS Standard

3 VERSION
M = Pneumatic with hand lever

4 SIZE
80 = Size 80 (Cylinder Ø63 mm)

5 ARM POSITION
N = No arm

For clamping arms according to NAAMS standard, please contact our Sales Dept.

6 SQUARE SHAFT
R = Right side only
L = Left side only
N = Both sides

7 SENSOR
N = No sensor (with protection plate)
K = Electronic sensor PNP, M12 (DF-K)

8 PORT THREAD
G = Gas
N = NTP

9 PRODUCT REVISION
Assigned by UNIVER

10 ATEX
X = ATEX option
See ATEX Catalogue for types and versions

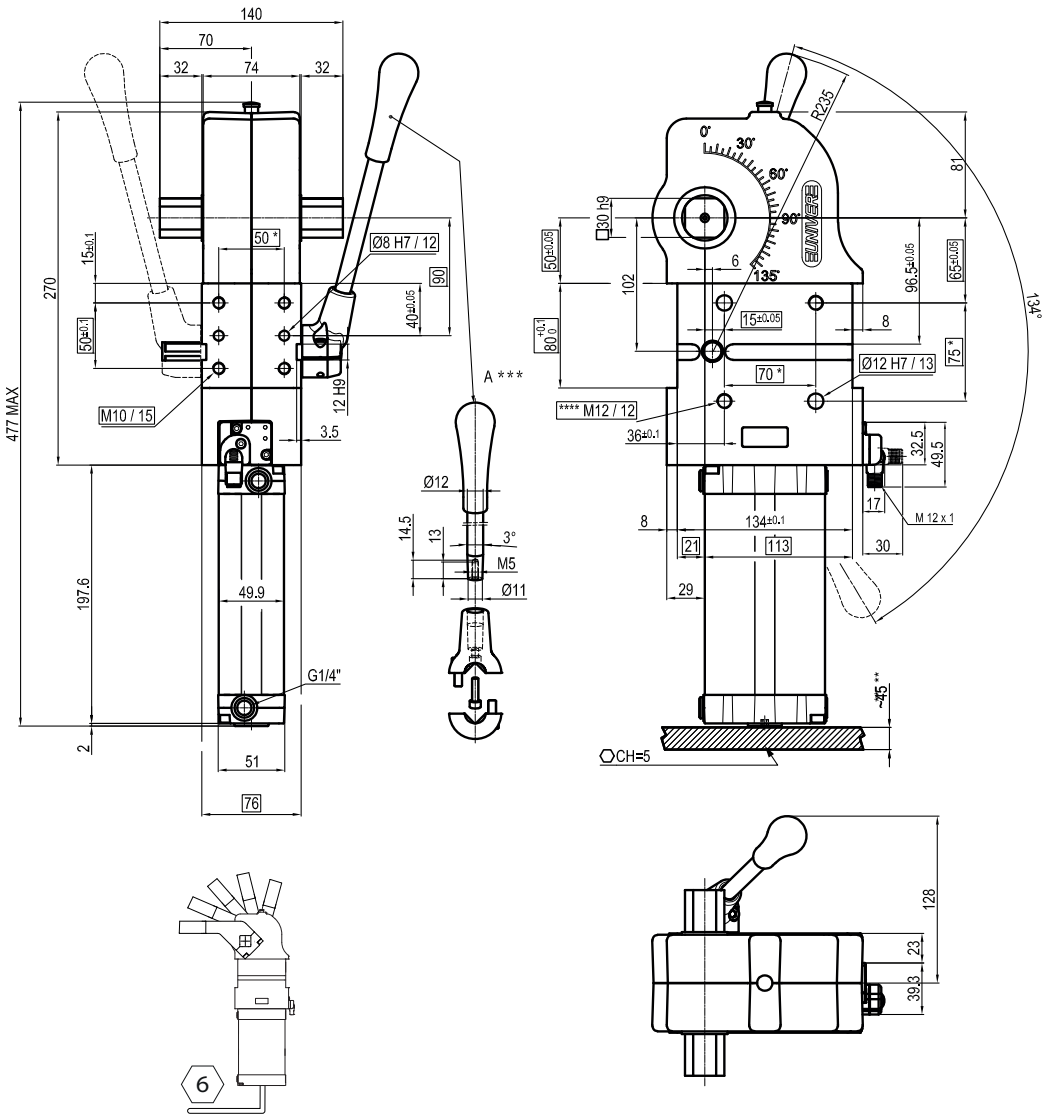

**TOLERANCE BETWEEN DOWELS ± 0,02 BETWEEN SCREW HOLES ± 0,1*
***AREA TO ACCESS ANGLE ADJUSTMENT*
****DIMENSIONS TO BE RESPECTED IN CASE OTHER MANUAL LEVERS ARE USED*
*****SCREW THREAD INSERT*

Air Consumption per Cycle

Compared with standard version

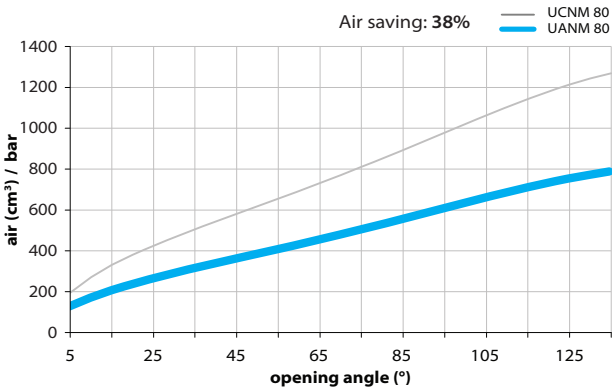

Sensors

Electronic (optical)

DF-K PNP M12
DF-J NPN M12
DF-Y PNP M12 White LED

Accessories

Handlever

UBF2580

Self holding system

UBK46P30N For blade arms
UBK46P30ND For wishbone arms

3

UNICLAMP

PNEUMATIC RETRACTABLE LOCATING PIN UNITS

Single rod Ø32-63mm

ULB32 2
ULP32 5
ULP50 8
ULP63 13
ULR50 18
ULR63 23

Single rod Ø50mm with hand lever

ULM50 28

Double rod Ø40-63mm

ULA40 33
ULA63 36

Double rod Ø50mm and hand lever

ULO50 38

Irreversible Ø40-50mm

ULZ40 40
ULY40 43
ULT50 46
ULX50 49

Manual Ø50

ULL50 52

CNOMO standard Ø50-63mm

LCG50 57
LCG63 59

CNOMO standard Ø50-63mm with hand lever

LCQ50 61
LCQ63 63

ULB 32

Pneumatic retractable locating pin unit, single rod, Ø32 mm with rear sensor

Pneumatic retractable pin unit, single rod, with rear sensor typically used on grippers and in welding applications to locate metal sheets in a definite position.

- Metal rod scraper
- Antirotation system
- Double guide to avoid backlash
- Optical sensor
- Many rod end styles available
- Sensor placed in rear position to facilitate installation when assembled on EOAT

CHARACTERISTICS

Operating temperature	**5° ÷ 45° C**
Min./Max. operating pressure	**0,4 / 0,6 MPa**
Bore Ø	**32 mm**
Max Pull force (0,5 MPa)	**300 N**
Max Push force (0,5 MPa)	**390 N**
Max. Torque (6 Nm)	**± 0,06 mm**
Max. Deflection (5,5 Nm)	**± 0,03 mm**
Weight	**1,0 Kg**
Pneumatic supply ports	**G 1/8**
Sensor	**electronic (optical)**
Supply voltage	**10 ÷ 30 Vdc**
IP code	**IP 65**

LIGHTWEIGHT

METAL SCRAPER

OPTICAL SENSOR

DOUBLE GUIDE

ANTI ROTATION

COMPACT

CODIFICATION KEY

UL	B	32	**040**	**B**	**K**	0	
1	2	3	4	5	6	7	8

1 SERIES
UL = UNICLAMP locating pin unit

2 VERSION
B = Pneumatic, rear sensor, single rod

3 SIZE
32 = Ø32 mm

4 STROKE
020 = 20 mm
040 = 40 mm

5 ROD END STYLE
B = Rod with profiled end
C = Rod with cross-profiled end inner Ø16 mm
E = Rod with cross-profiled end inner Ø10 mm

6 SENSOR
N = No sensor (with protection plate)
K = Electronic sensor PNP, M12 (DF-K)
J = Electronic sensor NPN, optical (DF-J)
Y = Electronic sensor PNP, M12 (DF-Y) white LED

7 PRODUCT REVISION
Assigned by UNIVER

8 ATEX
X = ATEX option
See ATEX Catalogue for types and versions

B | Rod with profiled end

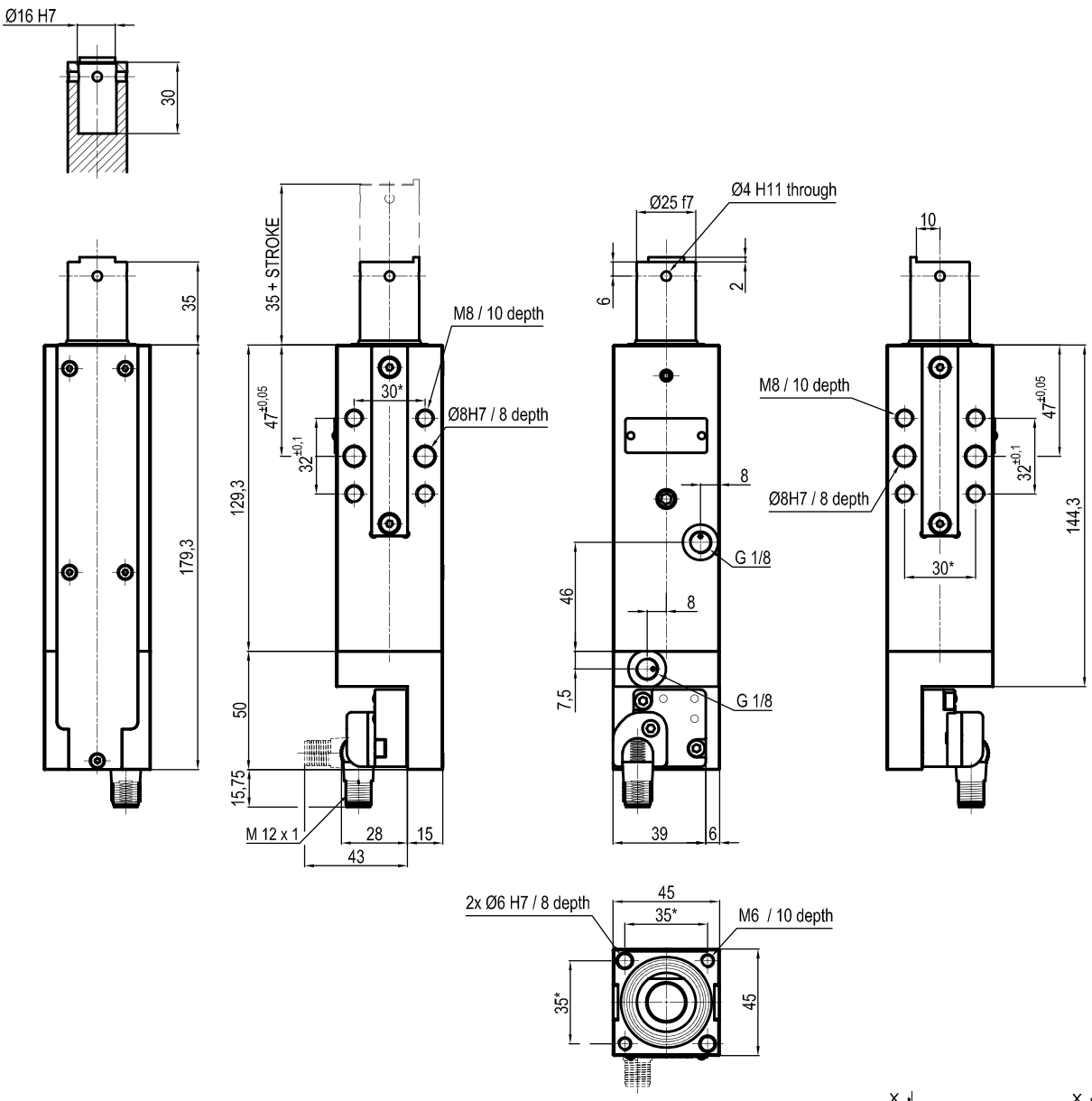

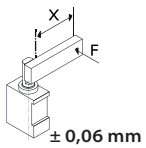

Max. Torque
6 Nm
X = 100 mm

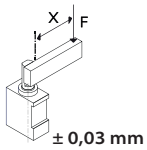

Max. deflection
moment 5,5 Nm
X = 100 mm

**TOLERANCE BETWEEN DOWELS ± 0,02 BETWEEN SCREW HOLES ± 0,1*

Sensors

Electronic (optical)

DF-K PNP M12
DF-J NPN M12
DF-Y PNP M12 White LED

C | Rod with cross-profiled end

Inner Ø16 mm

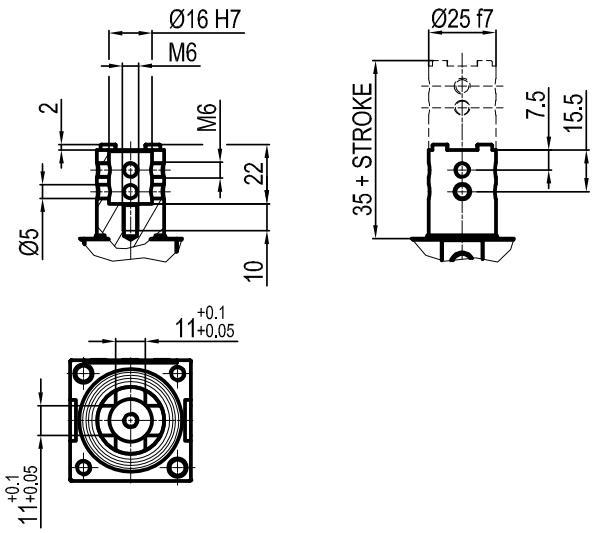

E | Rod with cross-profiled end

Inner Ø10 mm

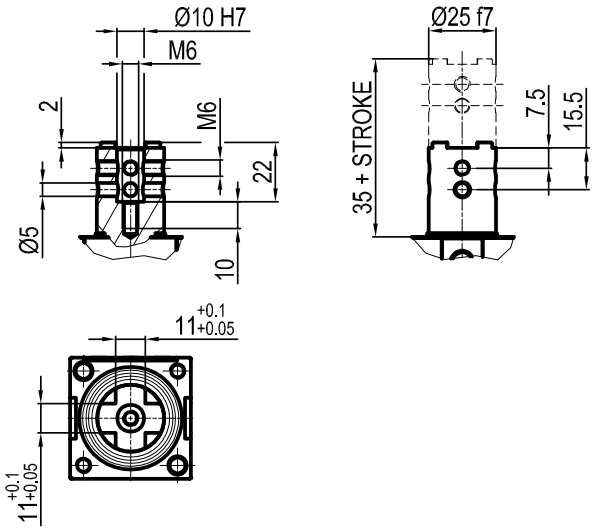

ULP 32

Pneumatic retractable locating pin unit, single rod, Ø32 mm

Pneumatic retractable pin unit, single rod, typically used in welding applications to locate metal sheets in a definite position.

- Metal rod scraper
- Antirotation system
- Optical sensor
- Many rod end styles available

CHARACTERISTICS

Operating temperature	**5° ÷ 45° C**
Min./Max. operating pressure	**0,4 / 0,6 MPa**
Bore Ø	**32 mm**
Max Pull force (0,5 MPa)	**296 N**
Max Push force (0,5 MPa)	**390 N**
Max. Torque (6 Nm)	**± 0,06 mm**
Max. Deflection (5,5 Nm)	**± 0,03 mm**
Weight	**1,7 Kg**
Pneumatic supply ports	**G 1/8**
Sensor	**electronic (optical)**
Supply voltage	**10 ÷ 30 Vdc**
IP code	**IP 65**

LIGHTWEIGHT

METAL SCRAPER

OPTICAL SENSOR

DOUBLE GUIDE

ANTI ROTATION

COMPACT

CODIFICATION KEY

UL	P	32	**040**	**C**	**X**	**K**	0	
1	2	3	4	5	6	7	8	9

1 SERIES
UL = UNICLAMP locating pin unit

2 VERSION
P = Pneumatic, single rod

3 SIZE
32 = Ø32 mm

4 STROKE
020 = 20 mm
040 = 40 mm

5 ROD END STYLE
A = Rod for offset pins
B = Rod with profiled end
C = Rod with cross-profiled end inner Ø16 mm
E = Rod with cross-profiled end inner Ø10 mm

6 ROD ORIENTATION
X = Symmetrical
E* = East
O* = West
N* = North
S* = South
*only with "A" rod style

7 SENSOR
N = No sensor (with protection plate)
K = Electronic sensor PNP, M12 (DF-K)
J = Electronic sensor NPN, optical, (DF-J)
Y = Electronic sensor PNP, M12 (DF-Y) white LED

8 PRODUCT REVISION
Assigned by UNIVER

9 ATEX
X = ATEX option
See ATEX Catalogue for types and versions

A | Rod for offset pins

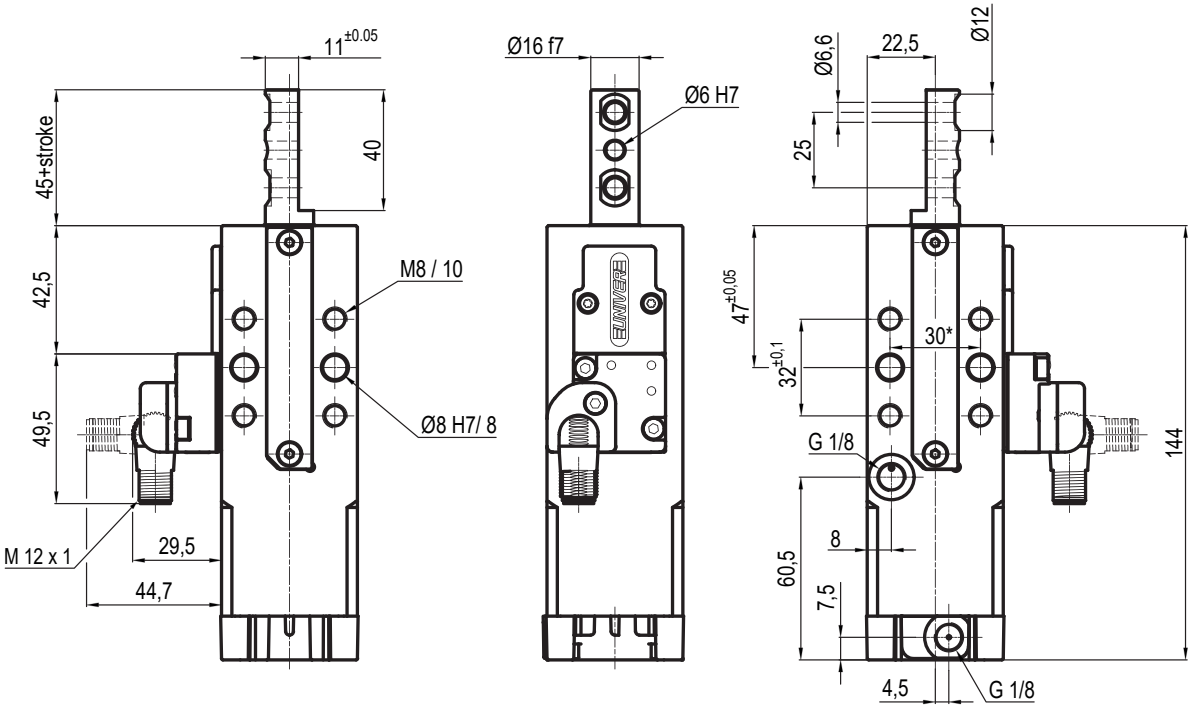

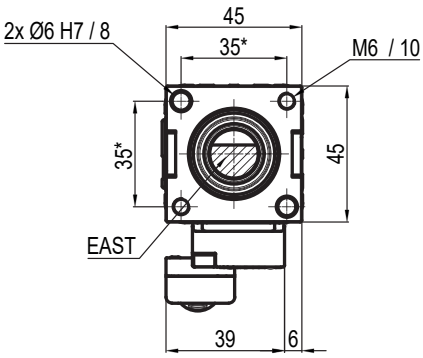

East **West** **North** **South**

**TOLERANCE BETWEEN DOWELS ± 0,02 BETWEEN SCREW HOLES ± 0,1*

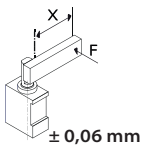

Max. Torque
6 Nm
X = 100 mm

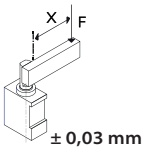

Max. deflection
moment 5,5 Nm
X = 100 mm

Sensors

Electronic (optical)

DF-K PNP M12
DF-J NPN M12
DF-Y PNP M12 White LED

B | Rod with profiled end

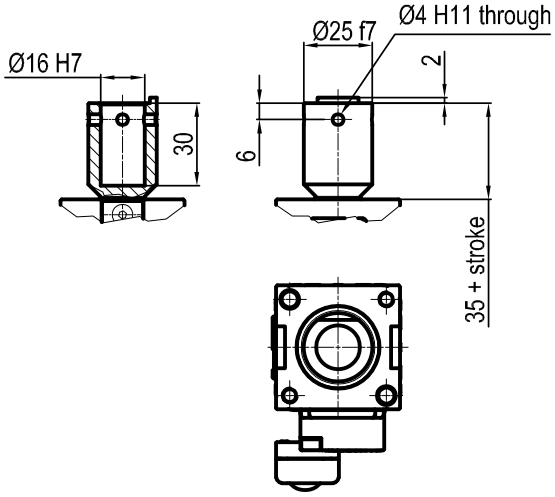

C | Rod with cross-profiled end

Inner Ø16 mm

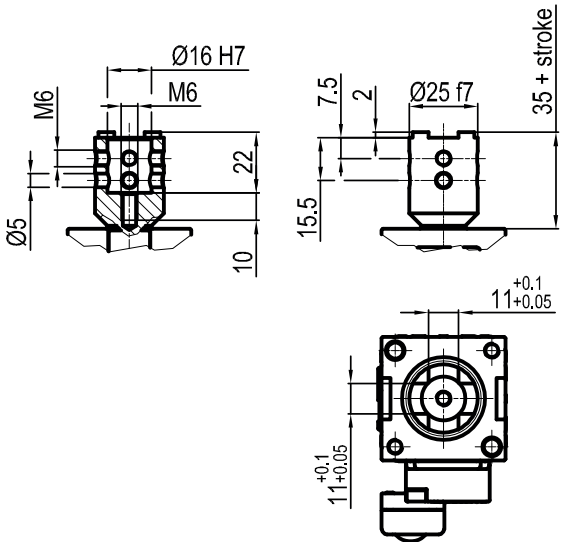

E | Rod with cross-profiled end

Inner Ø10 mm

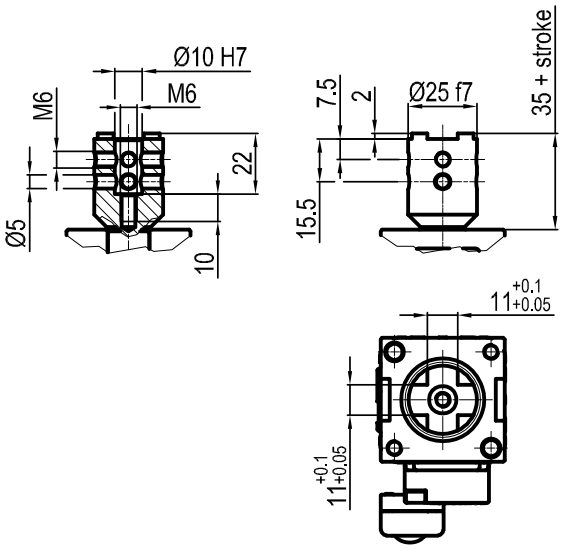

ULP 50

Pneumatic retractable locating pin unit, single rod, Ø50 mm

Pneumatic retractable pin unit, single rod, typically used in welding applications to locate metal sheets in a definite position.

- Metal rod scraper
- Antirotation system
- Double guide to avoid backlash
- Compact dimensions
- Electronic or pneumatic sensor
- Many rod end styles available
- Version with hand lever available (ULM series)

CHARACTERISTICS

Operating temperature	**5° ÷ 45° C**
Min./Max. operating pressure	**0,4 / 0,6 MPa**
Bore Ø	**50 mm**
Max Pull force (0,5 MPa)	**860 N**
Max Push force (0,5 MPa)	**960 N**
Max. Torque (6 Nm)	**± 0,06 mm**
Max. Deflection (7,5 Nm)	**± 0,03 mm**
Weight	**2,3 Kg**
Pneumatic supply ports	**G 1/4 on both sides**
Sensor	**electronic (optical)**
Supply voltage	**10 ÷ 30 Vdc**
IP code	**IP 65**

LIGHTWEIGHT

METAL SCRAPER

OPTICAL SENSOR

DOUBLE GUIDE

ANTI ROTATION

COMPACT

CODIFICATION KEY

UL	P	50	**040**	**C**	**X**	**K**	0	
1	2	3	4	5	6	7	8	9

1 SERIES
UL = UNICLAMP locating pin unit

2 VERSION
P = Pneumatic, single rod

3 SIZE
50 = Ø50 mm

4 STROKE
015 = 15 mm
025 = 25 mm
040 = 40 mm
050 = 50 mm
060 = 60 mm
075* = 75 mm
100* = 100 mm
110* = 110 mm

* special strokes **oversized body**

5 ROD END STYLE
A = Rod for offset pins
B = Rod with profled end
C = Rod with cross-profiled end inner Ø 16 mm
D = Rod for offset pins with oversized dowel holes
E = Rod with cross profiled end inner Ø 10 mm
F = Compatible with NAAMS, inner Ø 16
H = Rod with flat end, inner Ø10 mm
I = Rod with flat end, inner Ø12 mm
L* = Rod with inner Ø12 mm
M* = Rod with inner Ø 20 mm

*compatible with **CNOMO** standard

6 ROD ORIENTATION
X = Symmetrical
E* = East
O* = West
N* = North
S* = South

*only with **"A"** and **"D"** rod style

7 SENSOR
N = No sensor (with protection plate)
K = Electronic sensor PNP, M12 (DF-K)
D = Pneumatic sensor (DF-UPNW)
J = Electronic sensor NPN, optical (DF-J)
Y = Electronic sensor PNP, M12 (DF-Y) white LED

8 PRODUCT REVISION
Assigned by UNIVER

9 ATEX
X = ATEX option
See ATEX Catalogue for types and versions

A | Rod for offset pins

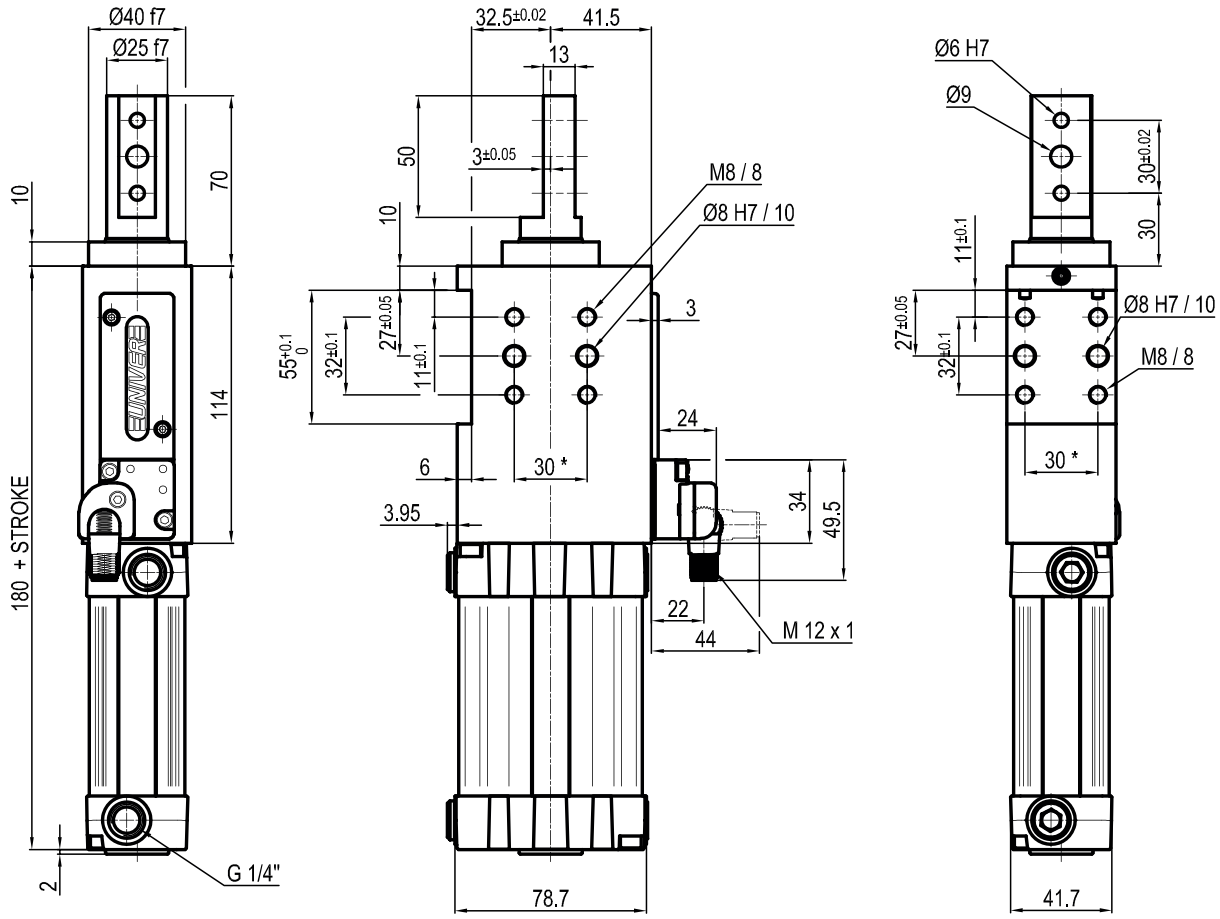

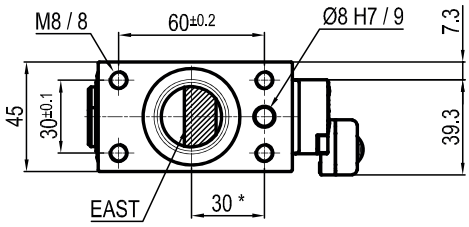

East **West** **North** **South**

**TOLERANCE BETWEEN DOWELS ± 0,02 BETWEEN SCREW HOLES ± 0,1*

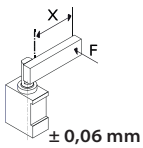

Max. Torque
6 Nm
X = 100 mm

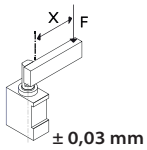

Max. deflection
moment 7,5 Nm
X = 100 mm

Sensors

Electronic (optical)

DF-K PNP M12
DF-J NPN M12
DF-Y PNP M12 White LED

Pneumatic

DF-UPNW

B Rod with profiled end

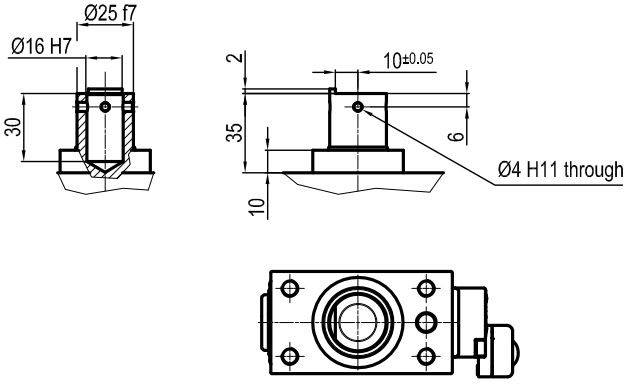

C Rod with cross-profiled end

Inner Ø16 mm

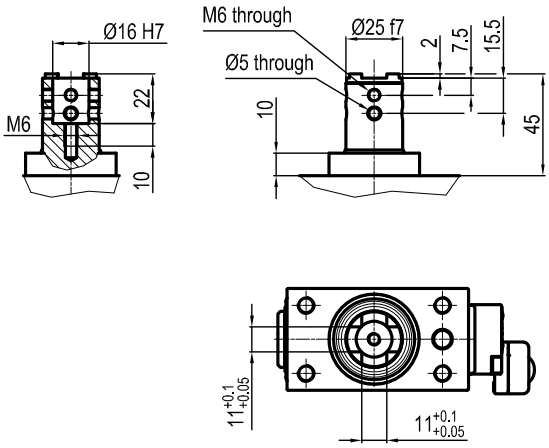

D Rod for offset pins

Oversized dowel holes

Max. deflection moment 5,5 Nm
X = 100 mm

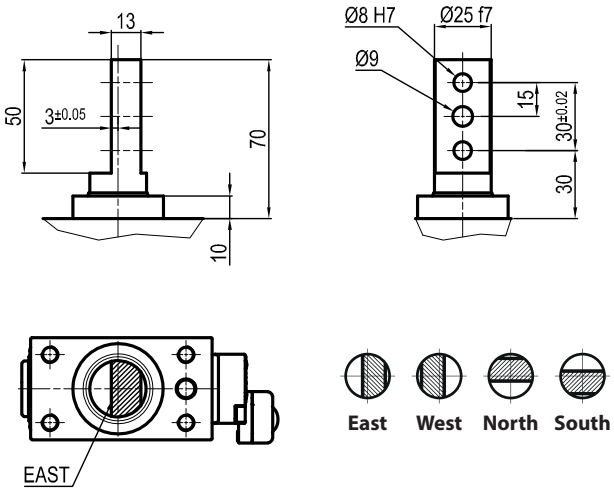

E | Rod with cross-profiled end
Inner Ø10 mm

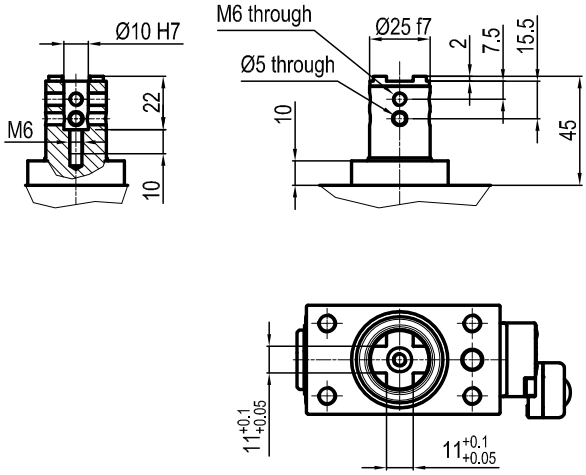

F | Compatible with NAAMS
Inner Ø16 mm

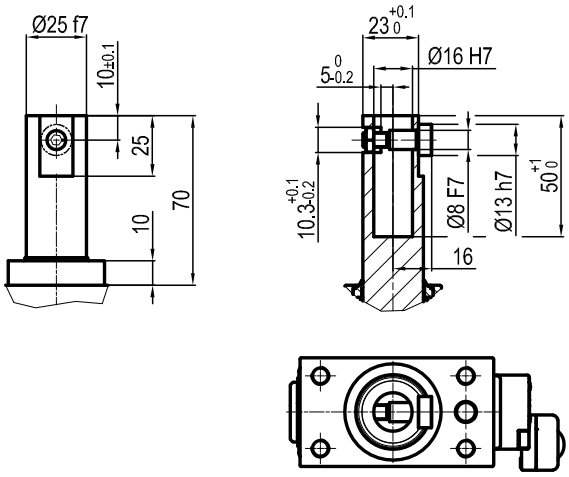

H | Rod with flat end
Inner Ø10 mm

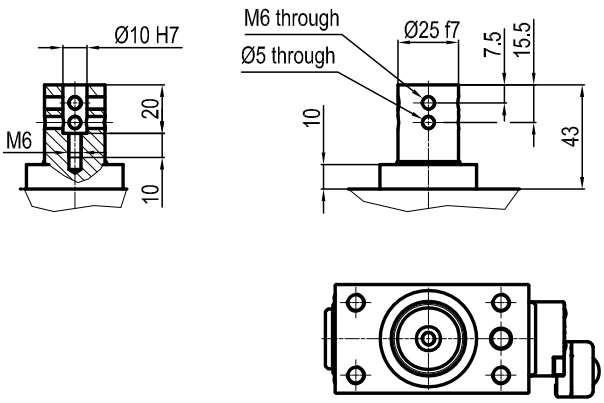

I Rod with flat end

Inner Ø12 mm

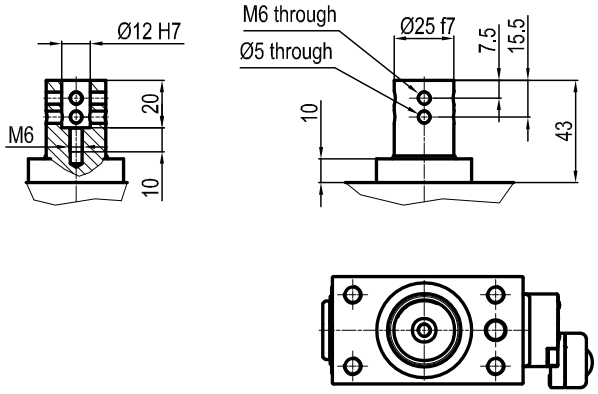

L Rod compatible with CNOMO standard

Inner Ø12 mm

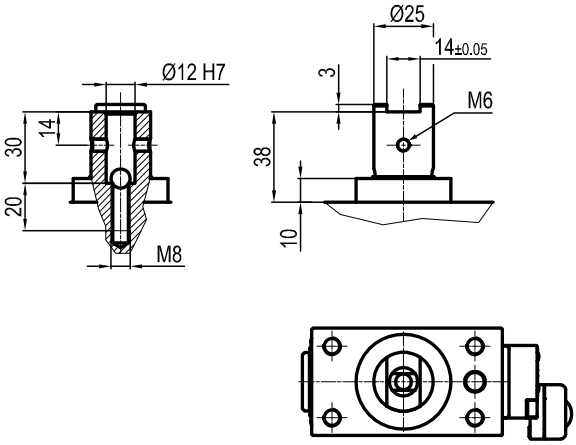

M Rod compatible with CNOMO standard

Inner Ø20 mm

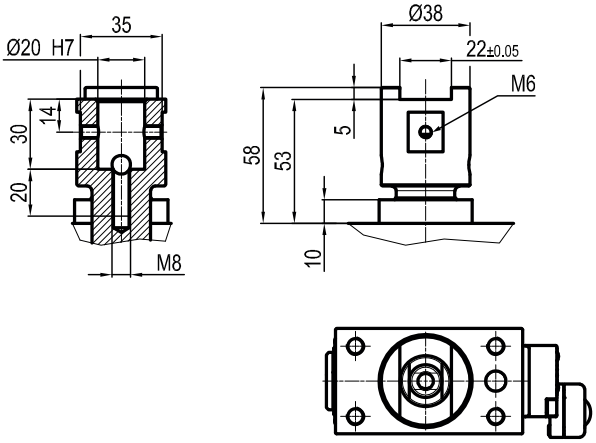

ULP 63

Pneumatic retractable locating pin unit, single rod, Ø63 mm

Pneumatic retractable pin unit, single rod, typically used in welding applications to locate metal sheets in a definite position.

- Metal rod scraper
- Antirotation system
- Double guide to avoid backlash
- Compact dimensions
- Electronic or pneumatic sensor
- Many rod end styles available

CHARACTERISTICS

Operating temperature	**5° ÷ 45° C**
Min./Max. operating pressure	**0,4 / 0,6 MPa**
Bore Ø	**63 mm**
Max Pull force (0,5 MPa)	**1430 N**
Max Push force (0,5 MPa)	**1530 N**
Max. Torque (6 Nm)	**± 0,06 mm**
Max. Deflection (7,5 Nm)	**± 0,03 mm**
Weight	**3,4 Kg**
Pneumatic supply ports	**G 1/4 on both sides**
Sensor	**electronic (optical)**
Supply voltage	**10 ÷ 30 Vdc**
IP code	**IP 65**

LIGHTWEIGHT

METAL SCRAPER

OPTICAL SENSOR

DOUBLE GUIDE

ANTI ROTATION

COMPACT

CODIFICATION KEY

UL	P	63	**040**	**C**	**X**	**K**	0	
1	2	3	4	5	6	7	8	9

1 SERIES
UL = UNICLAMP locating pin unit

2 VERSION
P = Pneumatic, single rod

3 SIZE
63 = Ø63 mm

4 STROKE
015 = 15 mm
025 = 25 mm
040 = 40 mm
050 = 50 mm
060 = 60 mm

5 ROD END STYLE
A = Rod for offset pins
B = Rod with profled end
C = Rod with cross-profiled end inner Ø 16 mm
D = Rod for offset pins with oversized dowel holes
E = Rod with cross profiled end inner Ø 10 mm
F = Compatible with NAAMS, inner Ø 16
H = Rod with flat end, inner Ø10 mm
I = Rod with flat end, inner Ø12 mm
L* = Rod with inner Ø12 mm
M* = Rod with inner Ø 20 mm
*compatible with CNOMO standard

6 ROD ORIENTATION
X = Symmetrical
E* = East
O* = West
N* = North
S* = South
*only with "A" and "D" rod style

7 SENSOR
N = No sensor (with protection plate)
K = Electronic sensor PNP, M12 (DF-K)
D = Pneumatic sensor (DF-UPNW)
J = Electronic sensor NPN, optical (DF-J)
Y = Electronic sensor PNP, M12 (DF-Y) white LED

8 PRODUCT REVISION
Assigned by UNIVER

9 ATEX
X = ATEX option
See ATEX Catalogue for types and versions

A | Rod for offset pins

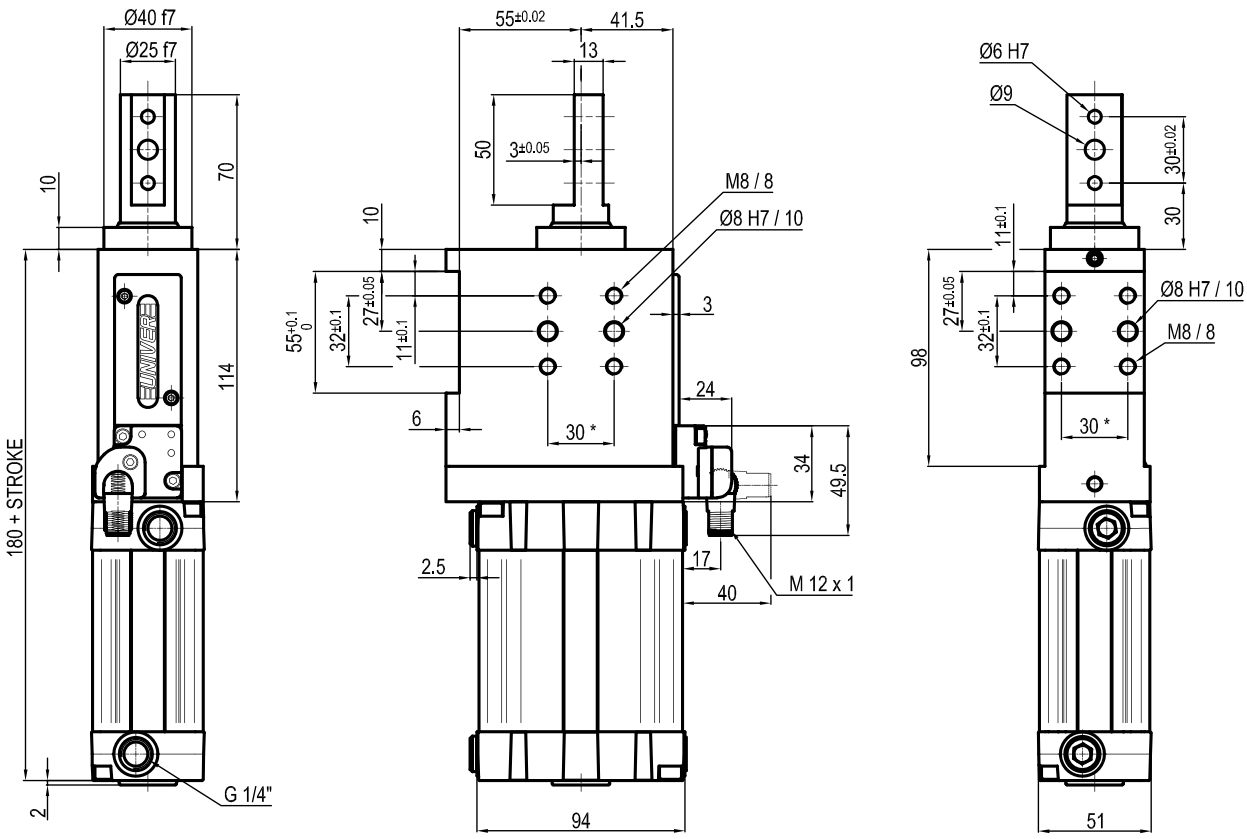

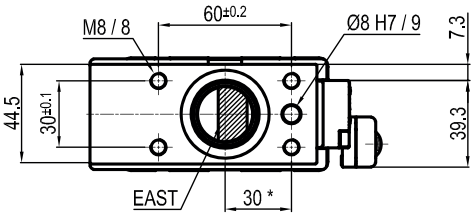

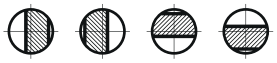

East **West** **North** **South**

**TOLERANCE BETWEEN DOWELS ± 0,02 BETWEEN SCREW HOLES ± 0,1*

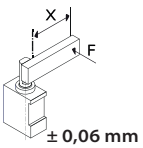

Max. Torque
6 Nm
X = 100 mm

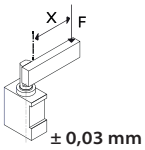

Max. deflection
moment 7,5 Nm
X = 100 mm

Sensors

Electronic (optical)

DF-K PNP M12
DF-J NPN M12
DF-Y PNP M12 White LED

Pneumatic

DF-UPNW

B Rod with profiled end

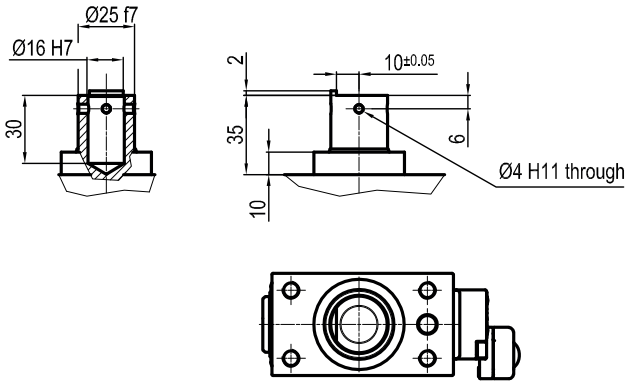

C Rod with cross-profiled end

Inner Ø16 mm

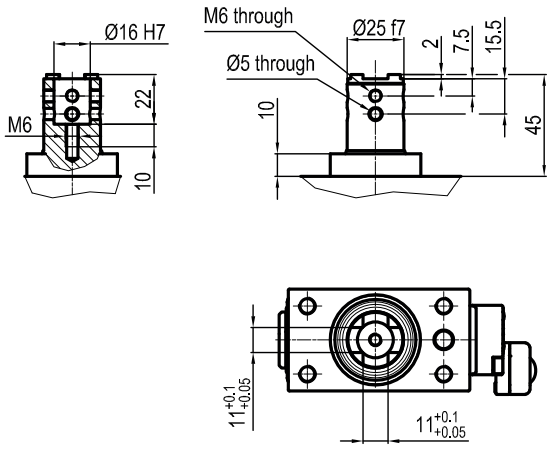

D Rod for offset pins

Oversized dowel holes

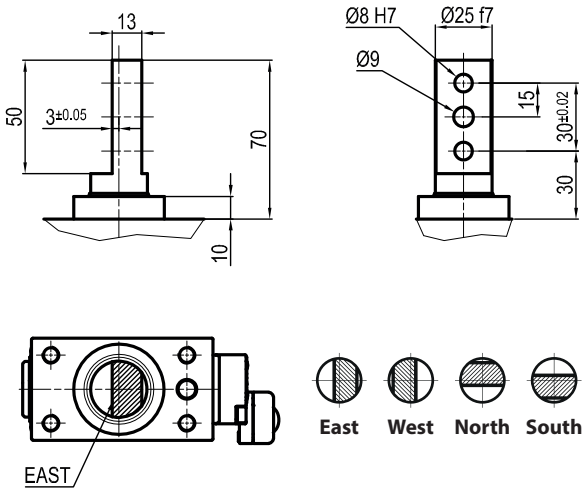

E Rod with cross-profiled end

Inner Ø10 mm

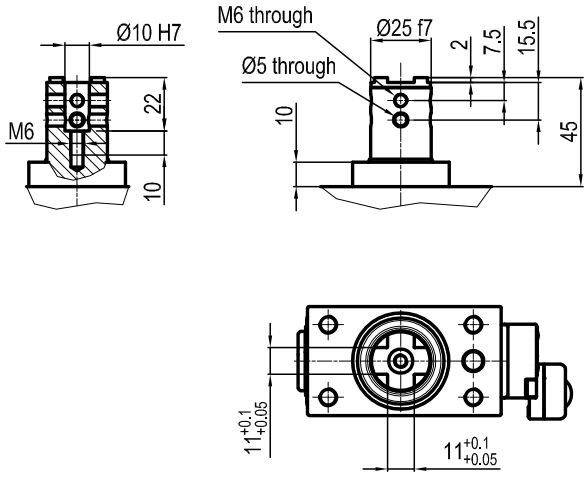

F Compatible with NAAMS

Inner Ø16 mm

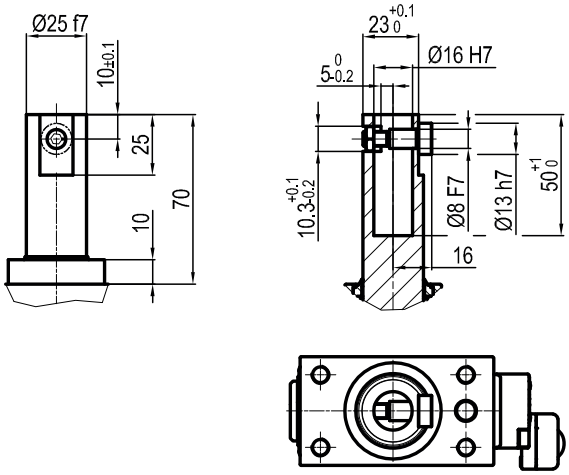

H Rod with flat end

Inner Ø10 mm

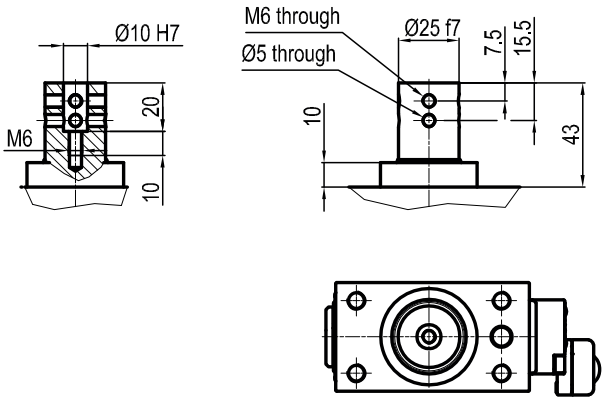

I Rod with flat end
Inner Ø12 mm

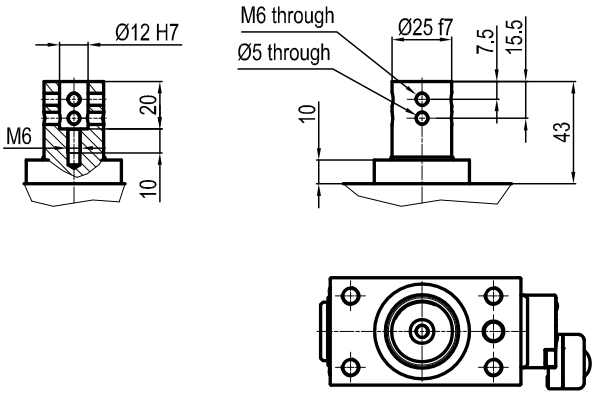

L Rod compatible with CNOMO standard
Inner Ø12 mm

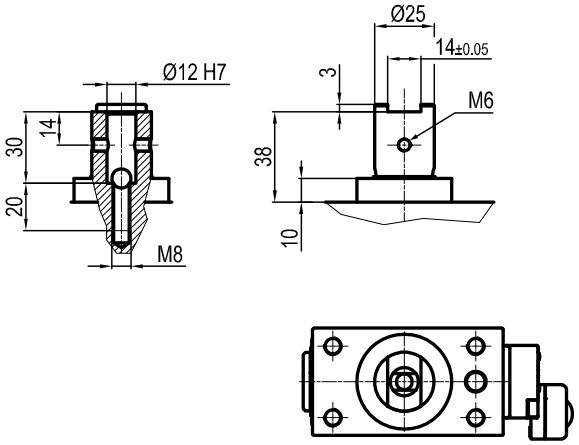

M Rod compatible with CNOMO standard
Inner Ø20 mm

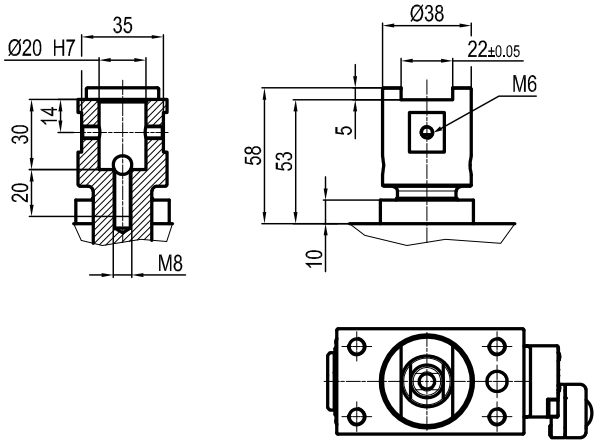

ULR 50

Compact pneumatic retractable locating pin unit, single rod, Ø50 mm

Compact pneumatic retractable pin unit, single rod, typically used in welding applications to locate metal sheets in a definite position.

- Metal rod scraper
- Antirotation system
- Double guide to avoid backlash
- Compact dimensions
- Electronic or pneumatic sensor
- Many rod end styles available

CHARACTERISTICS

Operating temperature	**5° ÷ 45° C**
Min./Max. operating pressure	**0,4 / 0,6 MPa**
Bore Ø	**50 mm**
Max Pull force (0,5 MPa)	**860 N**
Max Push force (0,5 MPa)	**960 N**
Max. Torque (6 Nm)	**± 0,06 mm**
Max. Deflection (7,5 Nm)	**± 0,03 mm**
Weight	**1,9 Kg**
Pneumatic supply ports	**G 1/4**
Sensor	**electronic (optical)**
Supply voltage	**10 ÷ 30 Vdc**
IP code	**IP 65**

OPTICAL SENSOR

LIGHTWEIGHT

COMPACT

METAL SCRAPER

DOUBLE GUIDE

ANTI ROTATION

CODIFICATION KEY

UL	R	50	**040**	**C**	**X**	**K**	0	
1	2	3	4	5	6	7	8	9

1 SERIES
UL = UNICLAMP locating pin unit

2 VERSION
R = Compact pneumatic, single rod

3 SIZE
50 = Ø50 mm

4 STROKE
015 = 15 mm
025 = 25 mm
040 = 40 mm
050 = 50 mm
060 = 60 mm

5 ROD END STYLE
A = Rod for offset pins
B = Rod with profled end
C = Rod with cross-profiled end inner Ø 16 mm
D = Rod for offset pins with oversized dowel holes
E = Rod with cross profiled end inner Ø 10 mm
F = Rod for side mounting
H = Rod with flat end, inner Ø10 mm
I = Rod with flat end, inner Ø12 mm
L* = Rod with inner Ø12 mm
M* = Rod with inner Ø 20 mm
*compatible with **CNOMO** standard

6 ROD ORIENTATION
X = Symmetrical
E* = East
O* = West
N* = North
S* = South
*only with **"A"** and **"D"** rod style

7 SENSOR
N = No sensor (with protection plate)
K = Electronic sensor PNP, M12(DF-K)
D = Pneumatic sensor (DF-UPNW)
J = Electronic sensor NPN, optical (DF-J)
Y = Electronic sensor PNP, M12 (DF-Y) white LED

8 PRODUCT REVISION
Assigned by UNIVER

9 ATEX
X = ATEX option
See ATEX Catalogue for types and versions

A | Rod for offset pins

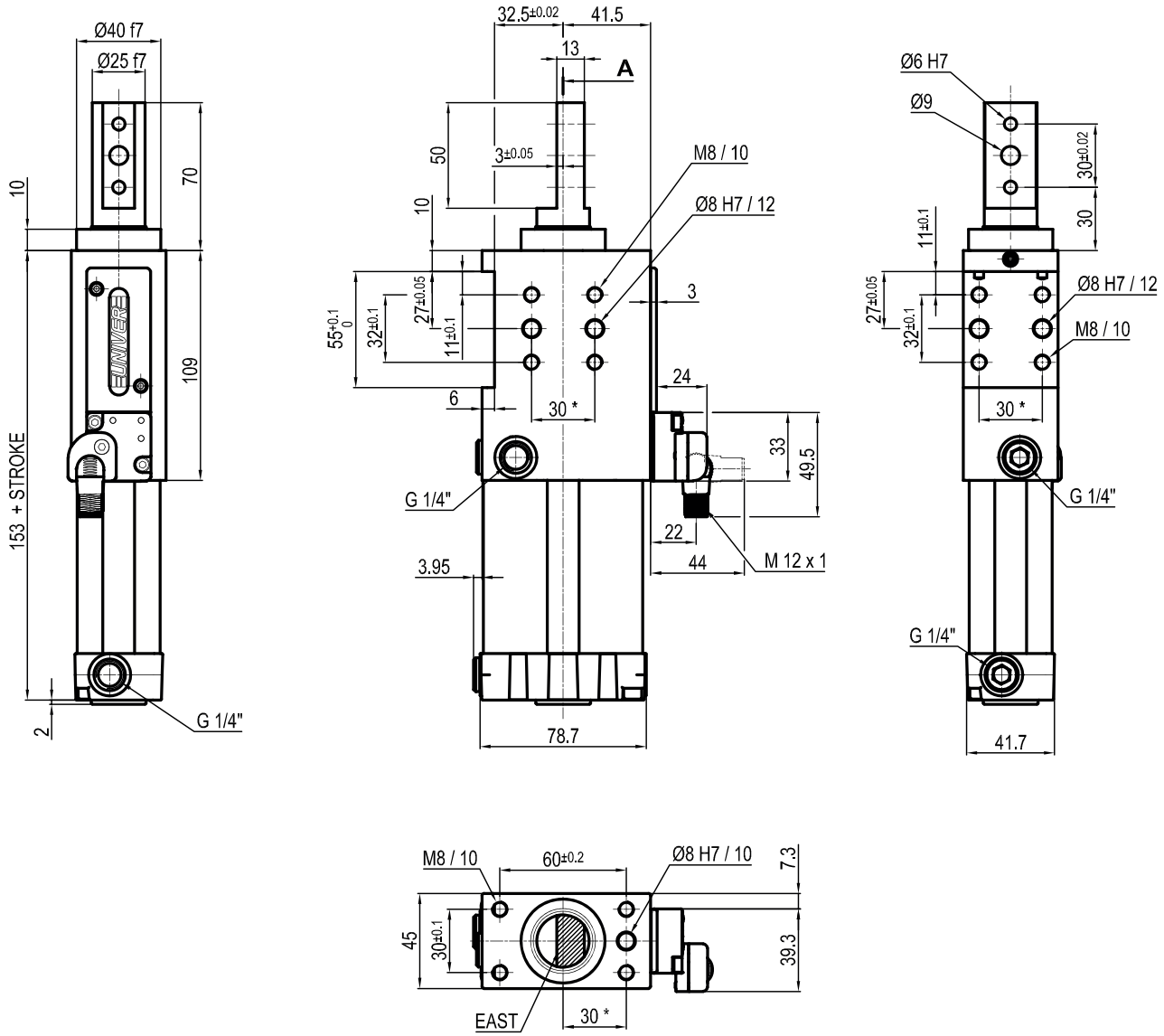

East **West** **North** **South**

**TOLERANCE BETWEEN DOWELS ± 0,02 BETWEEN SCREW HOLES ± 0,1*

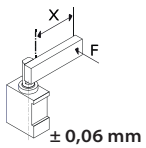

Max. Torque
6 Nm
X = 100 mm

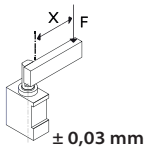

Max. deflection
moment 7,5 Nm
X = 100 mm

Sensors

Electronic (optical)

DF-K PNP M12
DF-J NPN M12
DF-Y PNP M12 White LED

B Rod with profiled end

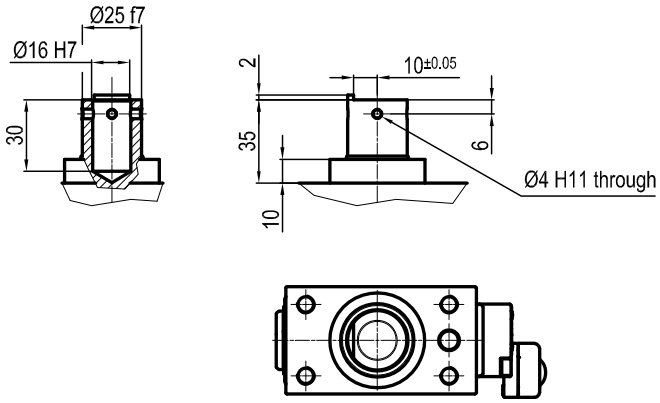

C Rod with cross-profiled end

Inner Ø16 mm

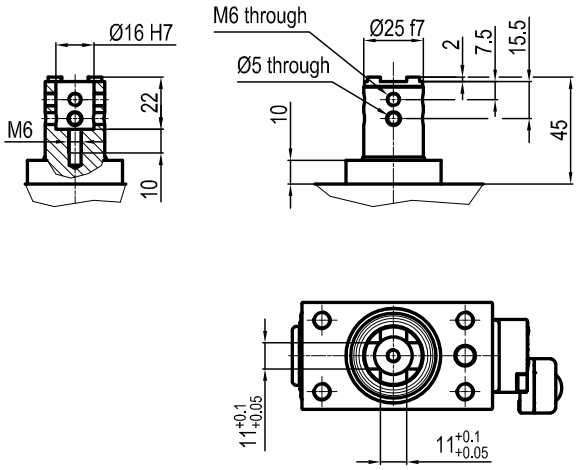

D Rod for offset pins

Oversized dowel holes

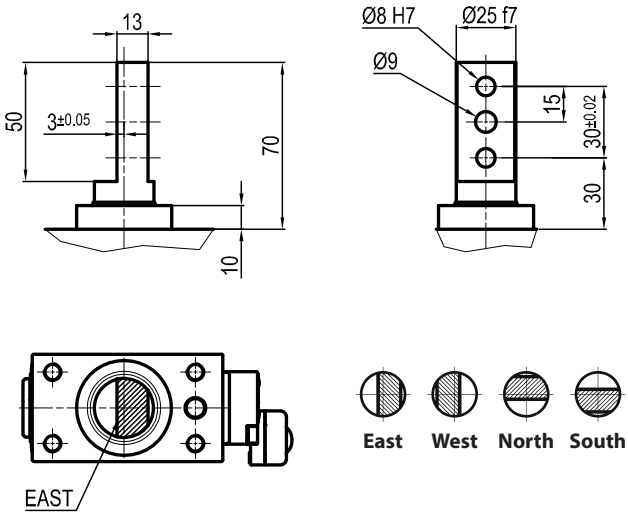

E Rod with cross-profiled end

Inner Ø10 mm

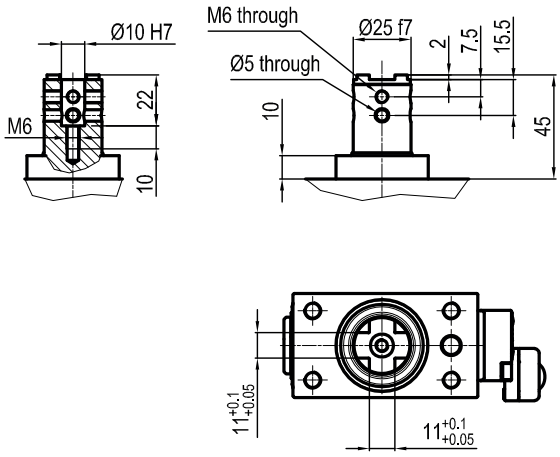

F Compatible with NAAMS

Inner Ø16 mm

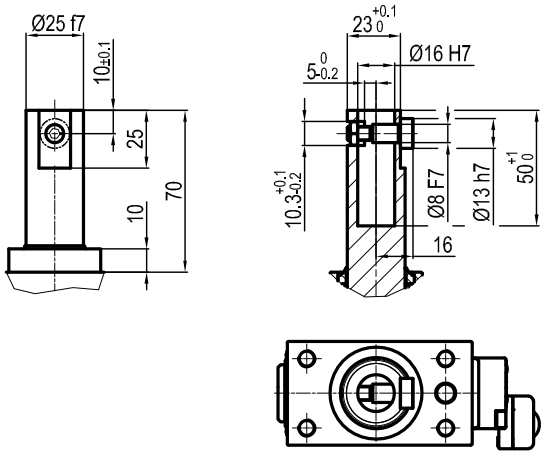

H Rod with flat end

Inner Ø10 mm

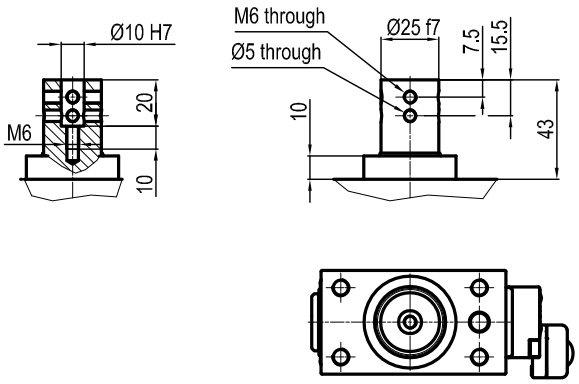

I Rod with flat end
Inner Ø12 mm

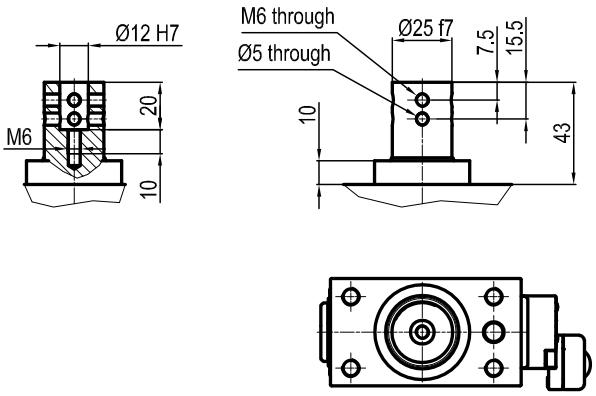

L Rod compatible with CNOMO standard
Inner Ø12 mm

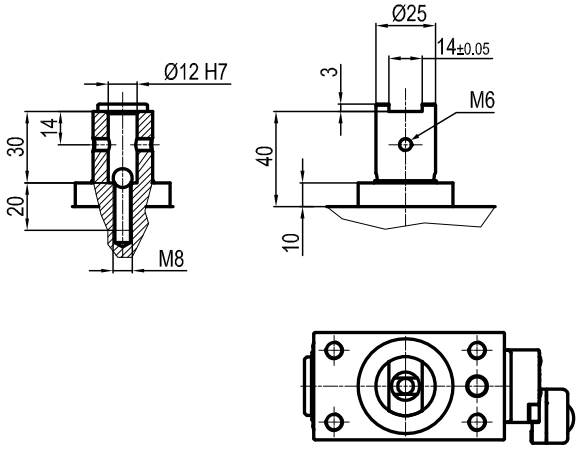

M Rod compatible with CNOMO standard
Inner Ø20 mm

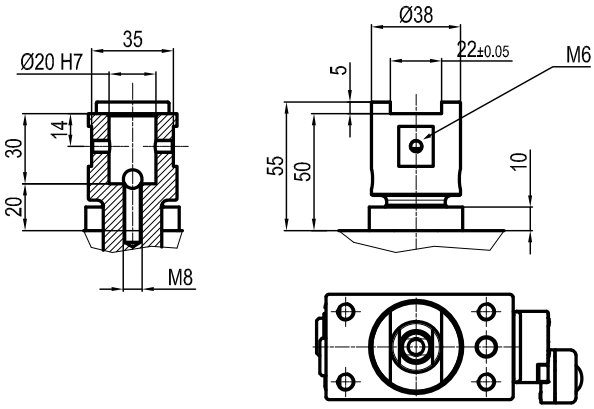

ULR 63

Compact pneumatic retractable locating pin unit, single rod, Ø63 mm

Compact pneumatic retractable pin unit, single rod, typically used in welding applications to locate metal sheets in a definite position.

- Metal rod scraper
- Antirotation system
- Double guide to avoid backlash
- Compact dimensions
- Electronic or pneumatic sensor
- Many rod end styles available

CHARACTERISTICS

Operating temperature	**5° ÷ 45° C**
Min./Max. operating pressure	**0,4 / 0,6 MPa**
Bore Ø	**63 mm**
Max Pull force (0,5 MPa)	**1430 N**
Max Push force (0,5 MPa)	**1530 N**
Max. Torque (6 Nm)	**± 0,06 mm**
Max. Deflection (7,5 Nm)	**± 0,03 mm**
Weight	**3,2 Kg**
Pneumatic supply ports	**G 1/4**
Sensor	**electronic (optical)**
Supply voltage	**10 ÷ 30 Vdc**
IP code	**IP 65**

OPTICAL SENSOR

LIGHTWEIGHT

COMPACT

METAL SCRAPER

DOUBLE GUIDE

ANTI ROTATION

CODIFICATION KEY

UL	R	63	**040**	**C**	**X**	**K**	0	
1	2	3	4	5	6	7	8	9

1 SERIES
UL = UNICLAMP locating pin unit

2 VERSION
R = Pneumatic, single rod

3 SIZE
63 = Ø63 mm

4 STROKE
015 = 15 mm
025 = 25 mm
040 = 40 mm
050 = 50 mm
060 = 60 mm

5 ROD END STYLE
A = Rod for offset pins
B = Rod with profled end
C = Rod with cross-profiled end inner Ø 16 mm
D = Rod for offset pins with oversized dowel holes
E = Rod with cross profiled end inner Ø 10 mm
F = Compatible with NAAMS, inner Ø 16
H = Rod with flat end, inner Ø10 mm
I = Rod with flat end, inner Ø12 mm
L* = Rod with inner Ø12 mm
M* = Rod with inner Ø 20 mm
*compatible with **CNOMO** standard

6 ROD ORIENTATION
X = Symmetrical
E* = East
O* = West
N* = North
S* = South
*only with **"A"** and **"D"** rod style

7 SENSOR
N = No sensor (with protection plate)
K = Electronic sensor PNP, M12 (DF-K)
J = Electronic sensor NPN, optical (DF-J)
Y = Electronic sensor PNP, M12 (DF-Y) white LED

8 PRODUCT REVISION
Assigned by UNIVER

9 ATEX
X = ATEX option
See ATEX Catalogue for types and versions

A | Rod for offset pins

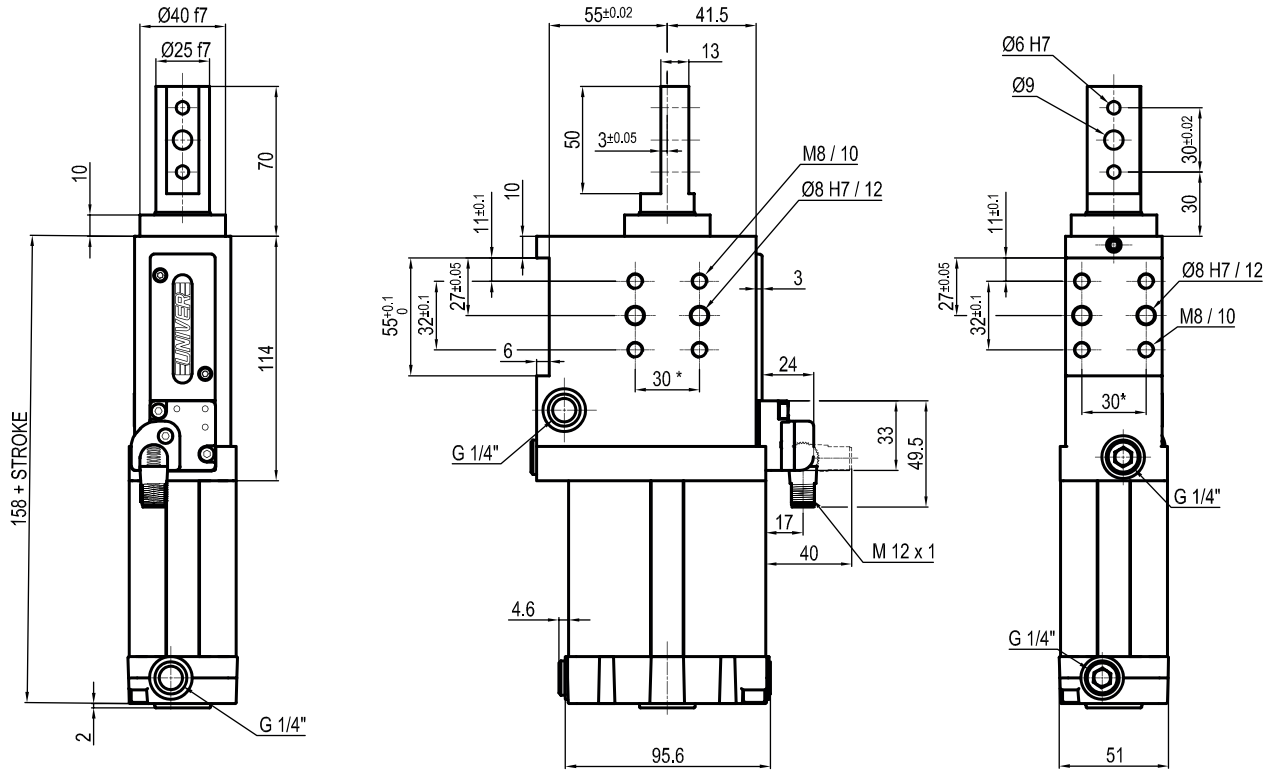

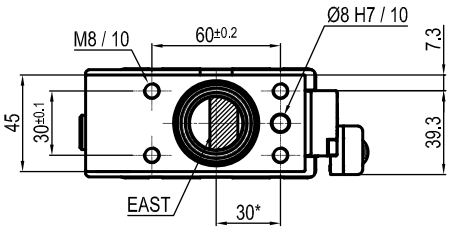

East **West** **North** **South**

**TOLERANCE BETWEEN DOWELS ± 0,02 BETWEEN SCREW HOLES ± 0,1*

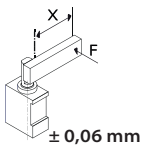

Max. Torque
6 Nm
X = 100 mm

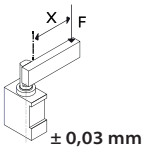

Max. deflection
moment 7,5 Nm
X = 100 mm

Sensors

Electronic (optical)

DF-K PNP M12
DF-J NPN M12
DF-Y PNP M12 White LED

B | Rod with profiled end

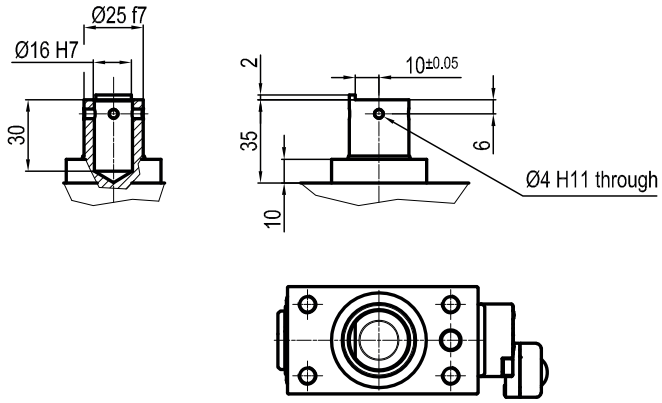

C | Rod with cross-profiled end

Inner Ø16 mm

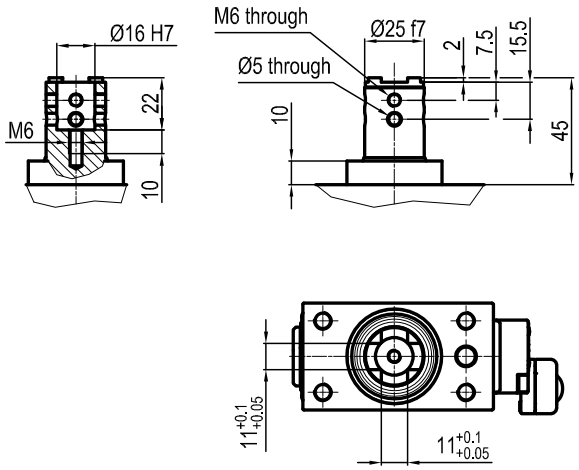

D | Rod for offset pins

Oversized dowel holes

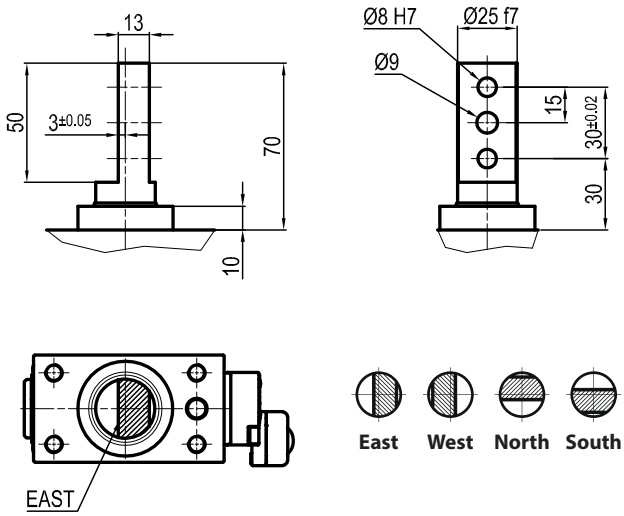

E Rod with cross-profiled end

Inner Ø10 mm

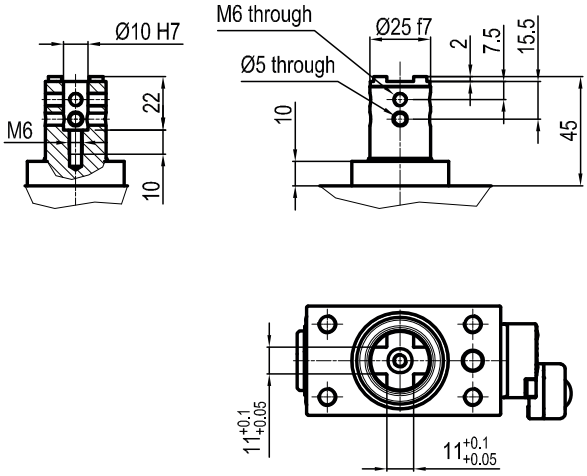

F Compatible with NAAMS

Inner Ø16 mm

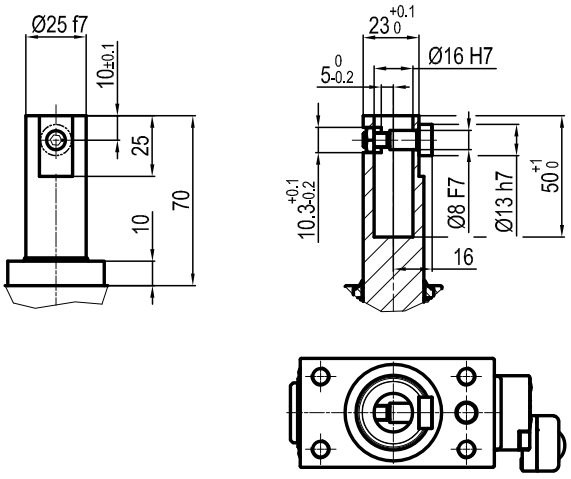

H Rod with flat end

Inner Ø10 mm

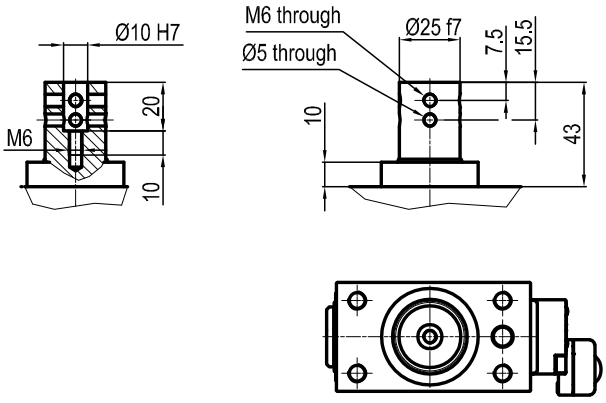

I Rod with flat end
Inner Ø12 mm

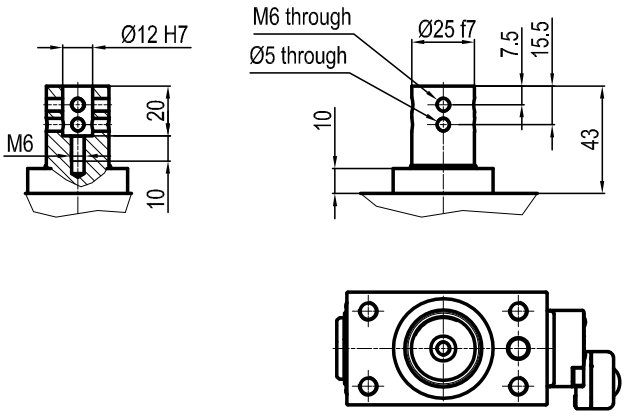

L Rod compatible with CNOMO standard
Inner Ø12 mm

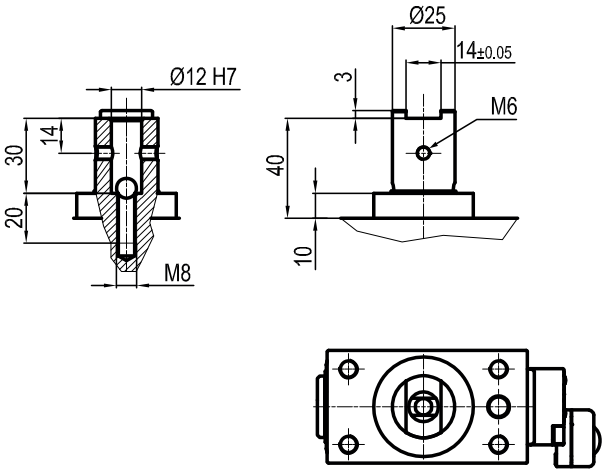

M Rod compatible with CNOMO standard
Inner Ø20 mm

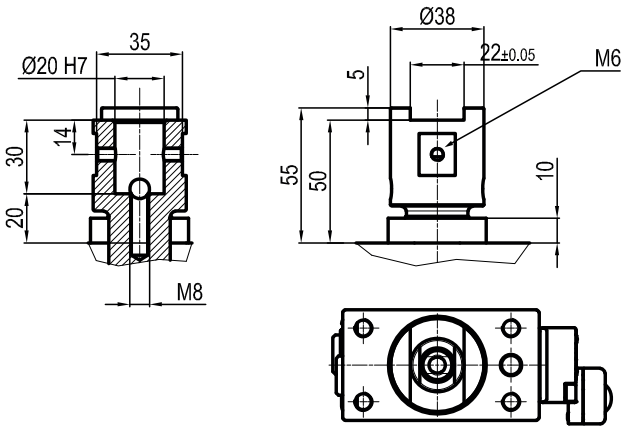

ULM 50

Pneumatic retractable locating pin unit, single rod, Ø50 mm with hand lever

Pneumatic retractable pin unit, single rod, typically used in welding applications to locate metal sheets in a definite position.

- Metal rod scraper
- Antirotation system
- Double guide to avoid backlash
- Compact dimensions
- Electronic or pneumatic sensor
- Many rod end styles available
- Ergonomic hand lever

CHARACTERISTICS

Operating temperature	**5° ÷ 45° C**
Min./Max. operating pressure	**0,4 / 0,6 MPa**
Bore Ø	**50 mm**
Max Pull force (0,5 MPa)	**560 N**
Max Push force (0,5 MPa)	**615 N**
Max. Torque (6 Nm)	**± 0,06 mm**
Max. Deflection (7,5 Nm)	**± 0,03 mm**
Weight	**3,4 Kg**
Pneumatic supply ports	**G 1/4 on both sides**
Sensor	**electronic (optical)**
Supply voltage	**10 ÷ 30 Vdc**
IP code	**IP 65**

OPTICAL SENSOR

LIGHTWEIGHT

COMPACT

METAL SCRAPER

DOUBLE GUIDE

ANTI ROTATION

CODIFICATION KEY

UL	M	50	**040**	**C**	**X**	**K**	0	
1	2	3	4	5	6	7	8	9

1 SERIES
UL = UNICLAMP locating pin unit

2 VERSION
M = Pneumatic, single rod with hand lever

3 SIZE
50 = Ø50 mm

4 STROKE
015 = 15 mm
025 = 25 mm
040 = 40 mm
050 = 50 mm
060 = 60 mm

5 ROD END STYLE
A = Rod for offset pins
B = Rod with profled end
C = Rod with cross-profiled end inner Ø 16 mm
D = Rod for offset pins with oversized dowel holes
E = Rod with cross profiled end inner Ø 10 mm
F = Compatible with NAAMS, inner Ø 16
H = Rod with flat end, inner Ø10 mm
I = Rod with flat end, inner Ø12 mm
L* = Rod with inner Ø12 mm
M* = Rod with inner Ø 20 mm
*compatible with **CNOMO** standard

6 ROD ORIENTATION
X = Symmetrical
E* = East
O* = West
N* = North
S* = South
*only with **"A"** and **"D"** rod style

7 SENSOR
N = No sensor (with protection plate)
K = Electronic sensor PNP, M12 (DF-K)
D = Pneumatic sensor (DF-UPNW)
J = Electronic sensor NPN, optical (DF-J)
Y = Electronic sensor PNP, M12 (DF-Y) white LED

8 PRODUCT REVISION
Assigned by UNIVER

9 ATEX
X = ATEX option
See ATEX Catalogue for types and versions

A | Rod for offset pins

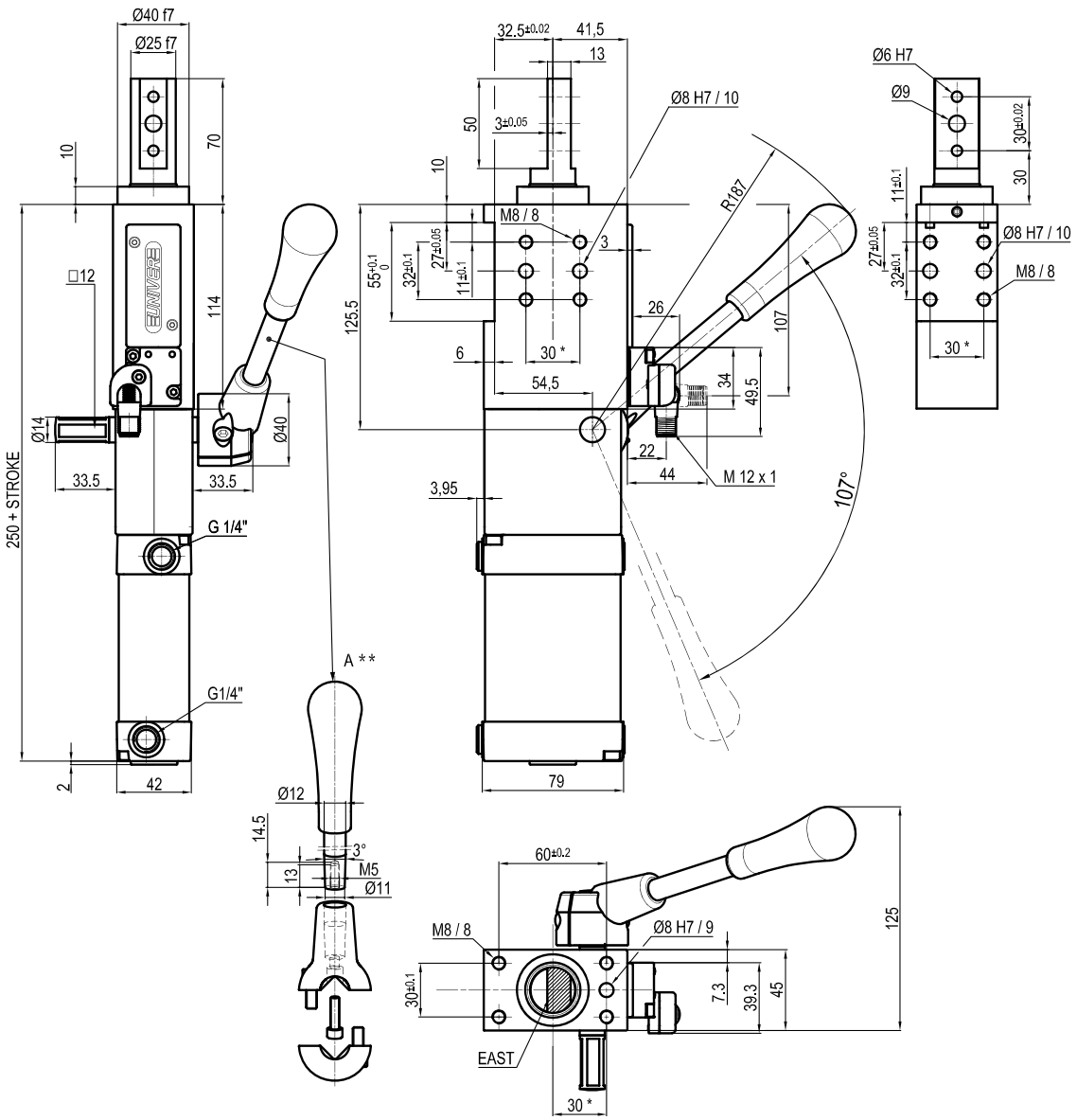

East **West** **North** **South**

**TOLERANCE BETWEEN DOWELS ± 0,02 BETWEEN SCREW HOLES ± 0,1*
***DIMENSIONS TO BE RESPECTED IN CASE OTHER MANUAL LEVERS ARE USED*

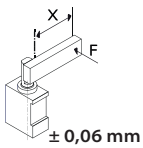

± 0,06 mm

Max. Torque
6 Nm
X = 100 mm

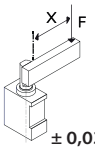

± 0,03 mm

Max. deflection
moment 7,5 Nm
X = 100 mm

Sensors

Electronic (optical)

DF-K PNP M12
DF-J NPN M12
DF-Y PNP M12 White LED

Pneumatic

DF-UPNW

Accessories

Handlever

UBF255063

B Rod with profiled end

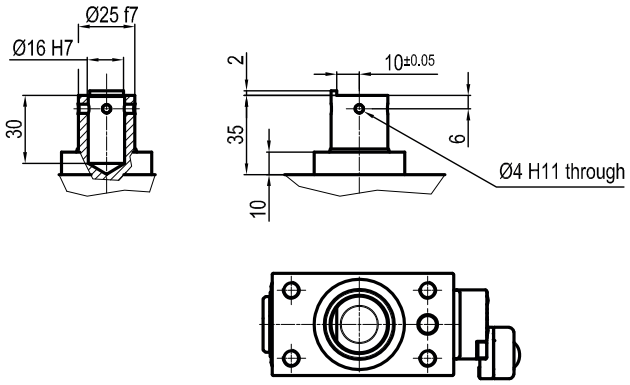

C Rod with cross-profiled end

Inner Ø16 mm

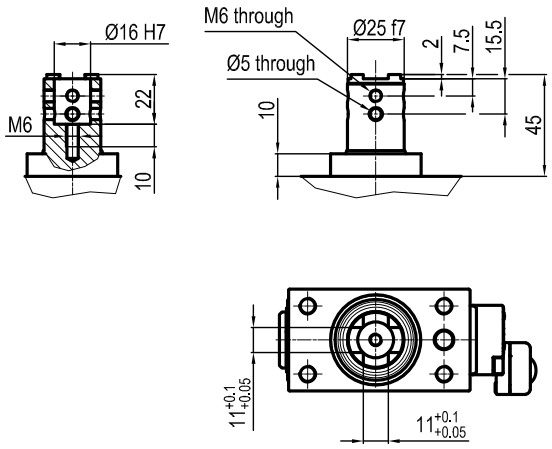

D Rod for offset pins

Oversized dowel holes

Max. Torque
6 Nm

Max. deflection
moment 7,5 Nm

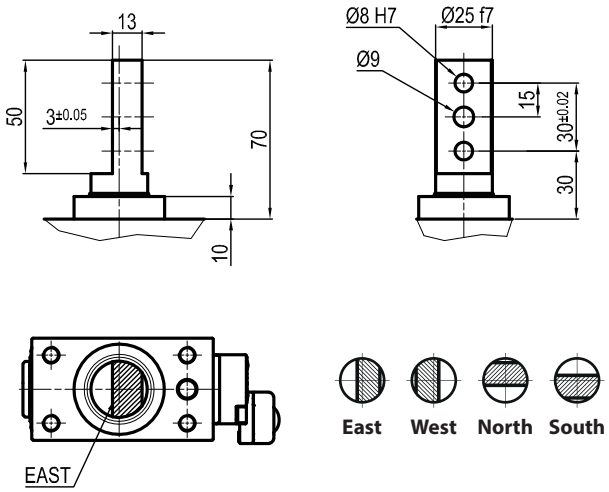

E Rod with cross-profiled end

Inner Ø10 mm

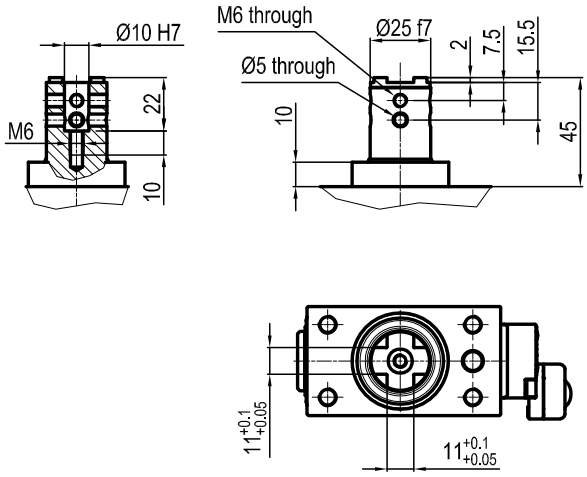

F Compatible with NAAMS

Inner Ø16 mm

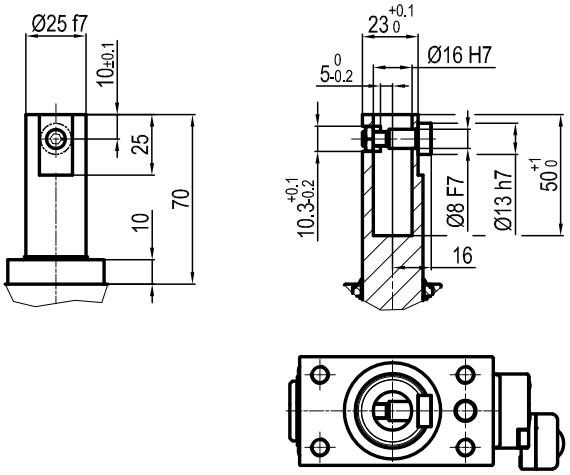

H Rod with flat end

Inner Ø10 mm

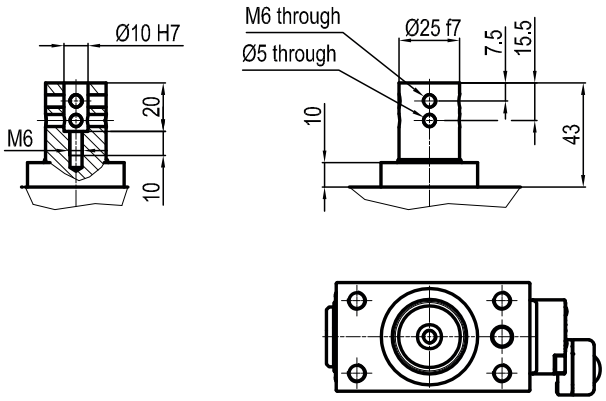

I Rod with flat end
Inner Ø12 mm

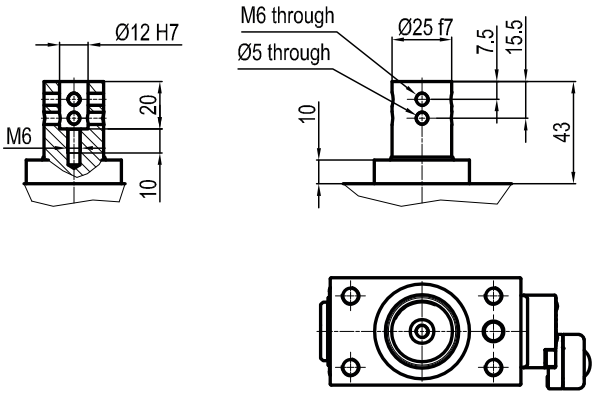

L Rod compatible with CNOMO standard
Inner Ø12 mm

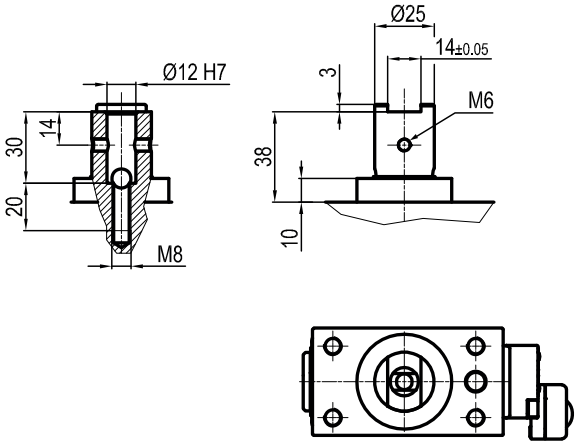

M Rod compatible with CNOMO standard
Inner Ø20 mm

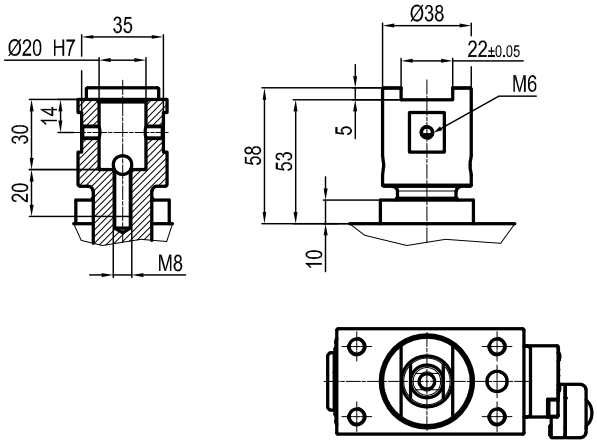

ULA 40

Pneumatic retractable locating pin unit, double rod, Ø40 mm

Pneumatic retractable pin unit, double rod, typically used in welding applications to locate metal sheets in a definite position.

- Metal rod scraper
- Double guide to avoid backlash
- Compact dimensions
- Electronic or pneumatic sensor
- Many rod end styles available
- Rod orientation adjustable by the user

CHARACTERISTICS

Operating temperature	**5° ÷ 45° C**
Min./Max. operating pressure	**0,4 / 0,6 MPa**
Bore Ø	**40 mm**
Max Pull force (0,5 MPa)	**550 N**
Max Push force (0,5 MPa)	**600 N**
Max. Torque (3 Nm)	**± 0,1 mm**
Max. Deflection (6 Nm)	**± 0,03 mm**
Weight	**1,3 Kg**
Pneumatic supply ports	**G 1/8 on both sides**
Sensor	**electronic (optical)**
Supply voltage	**10 ÷ 30 Vdc**
IP code	**IP 65**

OPTICAL SENSOR

LIGHTWEIGHT

COMPACT

METAL SCRAPER

DOUBLE GUIDE

CODIFICATION KEY

UL	A	40	**040**	**N**	**A**	**K**	0	
1	2	3	4	5	6	7	8	9

1 SERIES
UL = UNICLAMP locating pin unit

2 VERSION
A = Pneumatic, double orientable rod

3 SIZE
40 = Ø40 mm

4 STROKE
020 = 20 mm
040 = 40 mm

5 ROD END STYLE
A = Rod for offset pins (2 screws, 1 dowel)
N = Rod for offset pins with inverted holes (1 screw, 2 dowels)
G = Rod for offset pins rod plane matching body middle axis (2 screws, 1 dowel)
P = Rod for offset pins with inverted holes rod matching body middle axis (1 screw, 2 dowels)

6 SIDE MOUNTING
A = 55 mm
S = Standard

7 SENSOR
N = No sensor (with protection plate)
K = Electronic sensor PNP, M12 (DF-K)
D = Pneumatic sensor (DF-UPNW)
J = Electronic sensor NPN, optical (DF-J)
Y = Electronic sensor PNP, M12 (DF-Y) white LED

8 PRODUCT REVISION
Assigned by UNIVER

9 ATEX
X = ATEX option
See ATEX Catalogue for types and versions

A Rod for offset pins
(2 screws, 1 dowel)

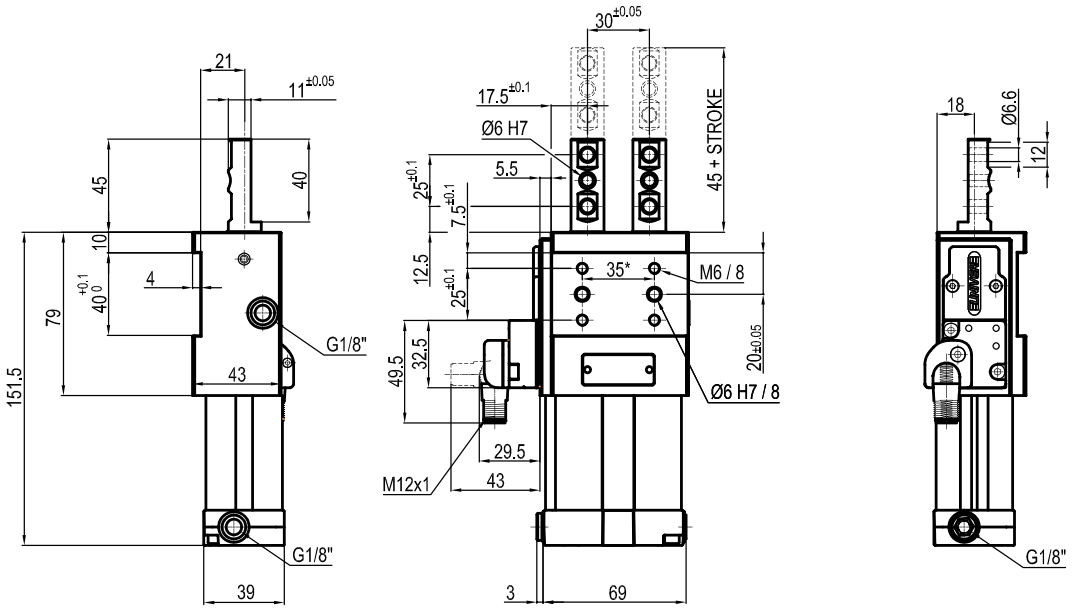

SIDE MOUNTING "A"

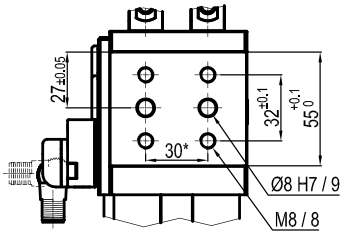

ORIENTABLE RODS

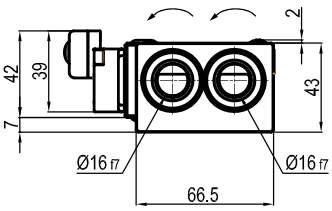

EAST

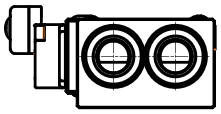

WEST

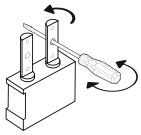

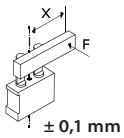

± 0,1 mm

Max. Torque
3 Nm
X = 100 mm

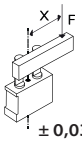

± 0,03 mm

Max. deflection
moment 6 Nm
X = 100 mm

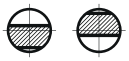

East **West**

**TOLERANCE BETWEEN DOWELS ± 0,02 BETWEEN SCREW HOLES ± 0,1*

Sensors

Electronic (optical)

DF-K PNP M12
DF-J NPN M12
DF-Y PNP M12 White LED

Pneumatic

DF-UPNWM

N Rod for offset pins
Inverted holes

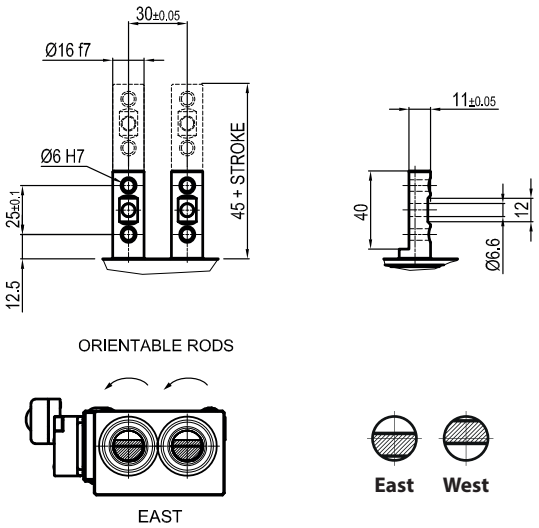

G Rod for offset pins
Rod plane matching body middle axis

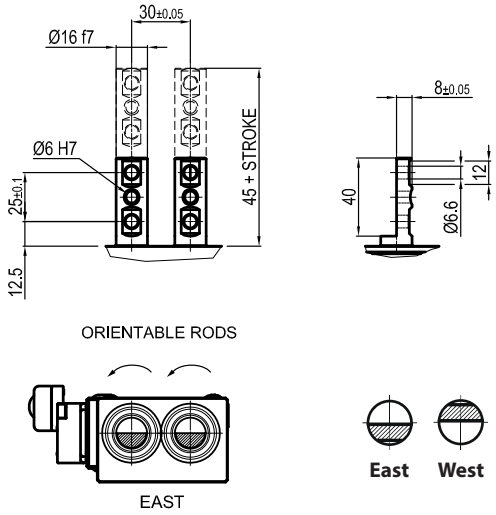

P Rod for offset pins
Inverted holes, rod plane matching body middle axis

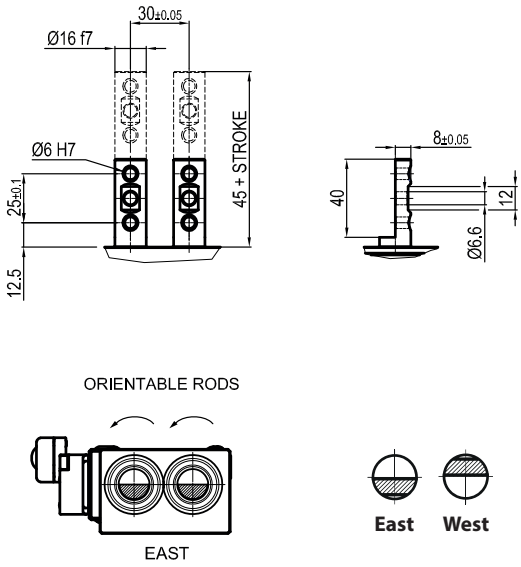

ULA 63

Pneumatic retractable locating pin unit, double rod, Ø63 mm

Pneumatic retractable locating pin unit, double rod, typically used in welding applications to locate metal sheets in a definite position.

- Metal rod scraper
- Double guide to avoid backlash
- Compact dimensions
- Electronic or pneumatic sensor
- Many rod end styles available
- Rod orientation adjustable by the user

CHARACTERISTICS

Operating temperature	**5° ÷ 45° C**
Min./Max. operating pressure	**0,4 / 0,6 MPa**
Bore Ø	**63 mm**
Max Pull force (0,5 MPa)	**1430 N**
Max Push force (0,5 MPa)	**1530 N**
Max. Torque (20 Nm)	**± 0,1 mm**
Max. Deflection (20 Nm)	**± 0,07 mm**
Weight	**4,6 Kg**
Pneumatic supply ports	**G 1/4 on both sides**
Sensor	**electronic (optical)**
Supply voltage	**10 ÷ 30 Vdc**
IP code	**IP 65**

OPTICAL SENSOR

LIGHTWEIGHT

COMPACT

METAL SCRAPER

DOUBLE GUIDE

CODIFICATION KEY

UL	A	63	**040**	A	**K**	0	
1	2	3	4	5	6	7	8

1 SERIES
UL = UNICLAMP locating pin unit

2 VERSION
A = Pneumatic, double orientable rod

3 SIZE
63 = Ø63 mm

4 STROKE
015 = 15 mm
025 = 25 mm
040 = 40 mm
050 = 50 mm
060 = 60 mm
075* = 75 mm
100* = 100 mm
110* = 110 mm

* special strokes **oversized body**

5 ROD END STYLE
A = Rod for offset pins

6 SENSOR
N = No sensor (with protection plate)
K = Electronic sensor PNP, M12 (DF-K)
D = Pneumatic sensor (DF-UPNW)
J = Electronic sensor NPN, optical (DF-J)
Y = Electronic sensor PNP, M12 (DF-Y) white LED

7 PRODUCT REVISION
Assigned by UNIVER

8 ATEX
X = ATEX option
See ATEX Catalogue for types and versions

A | Rod for offset pins

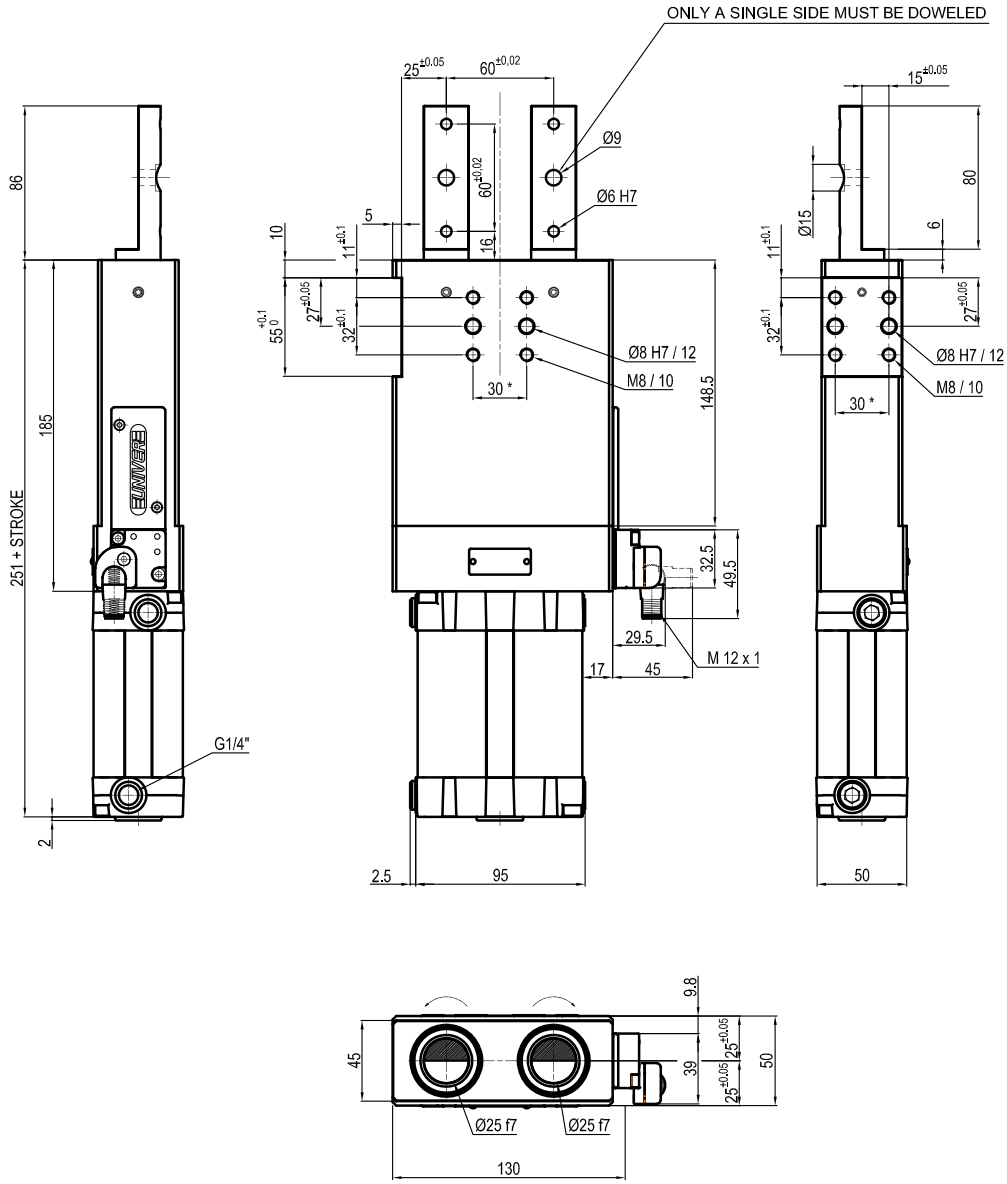

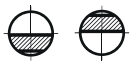

East **West**

**TOLERANCE BETWEEN DOWELS ± 0,02 BETWEEN SCREW HOLES ± 0,1*

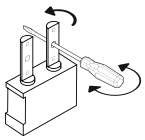

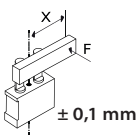

± 0,1 mm

Max. Torque
20 Nm
X = 100 mm

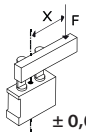

± 0,07 mm

Max. deflection
moment 20 Nm
X = 100 mm

Sensors

Electronic (optical)

DF-K PNP M12
DF-J NPN M12
DF-Y PNP M12 White LED

Pneumatic

DF-UPNW

ULO 50

Pneumatic retractable locating pin unit, double rod, Ø50 mm with hand lever

Pneumatic retractable pin unit with double rod and hand lever, typically used in welding applications to locate metal sheets in a definite position.

- Metal rod scraper
- Double guide to avoid backlash
- Compact dimensions
- Electronic or pneumatic sensor
- Many rod end styles available
- Ergonomic hand lever
- Rod orientation adjustable by the user

CHARACTERISTICS

Operating temperature	**5° ÷ 45° C**
Min./Max. operating pressure	**0,4 / 0,6 MPa**
Bore Ø	**50 mm**
Max. Torque (20 Nm)	**± 0,1 mm**
Max. Deflection (20 Nm)	**± 0,03 mm**
Weight	**5,0 Kg**
Pneumatic supply ports	**G 1/4 on both sides**
Sensor	**electronic (optical)**
Supply voltage	**10 ÷ 30 Vdc**
IP code	**IP 65**

OPTICAL SENSOR

LIGHTWEIGHT

COMPACT

METAL SCRAPER

DOUBLE GUIDE

CODIFICATION KEY

UL	O	50	**040**	A	**K**	0
1	2	3	4	5	6	7

1 SERIES
UL = UNICLAMP locating pin unit

2 VERSION
O = Pneumatic, double orientable rod with hand lever

3 SIZE
050 = Ø50 mm

4 STROKE
015 = 20 mm
025 = 25 mm
040 = 40 mm
050 = 50 mm
060 = 60 mm

5 ROD END STYLE
A = Rod for offset pins (2 screws, 1 dowel)

6 SENSOR
N = No sensor (with protection plate)
K = Electronic sensor PNP, M12 (DF-K)
D = Pneumatic sensor (DF-UPNW)
J = Electronic sensor NPN, optical (DF-J)
Y = Electronic sensor PNP, M12 (DF-Y) white LED

7 PRODUCT REVISION
Assigned by UNIVER

A | Rod for offset pins

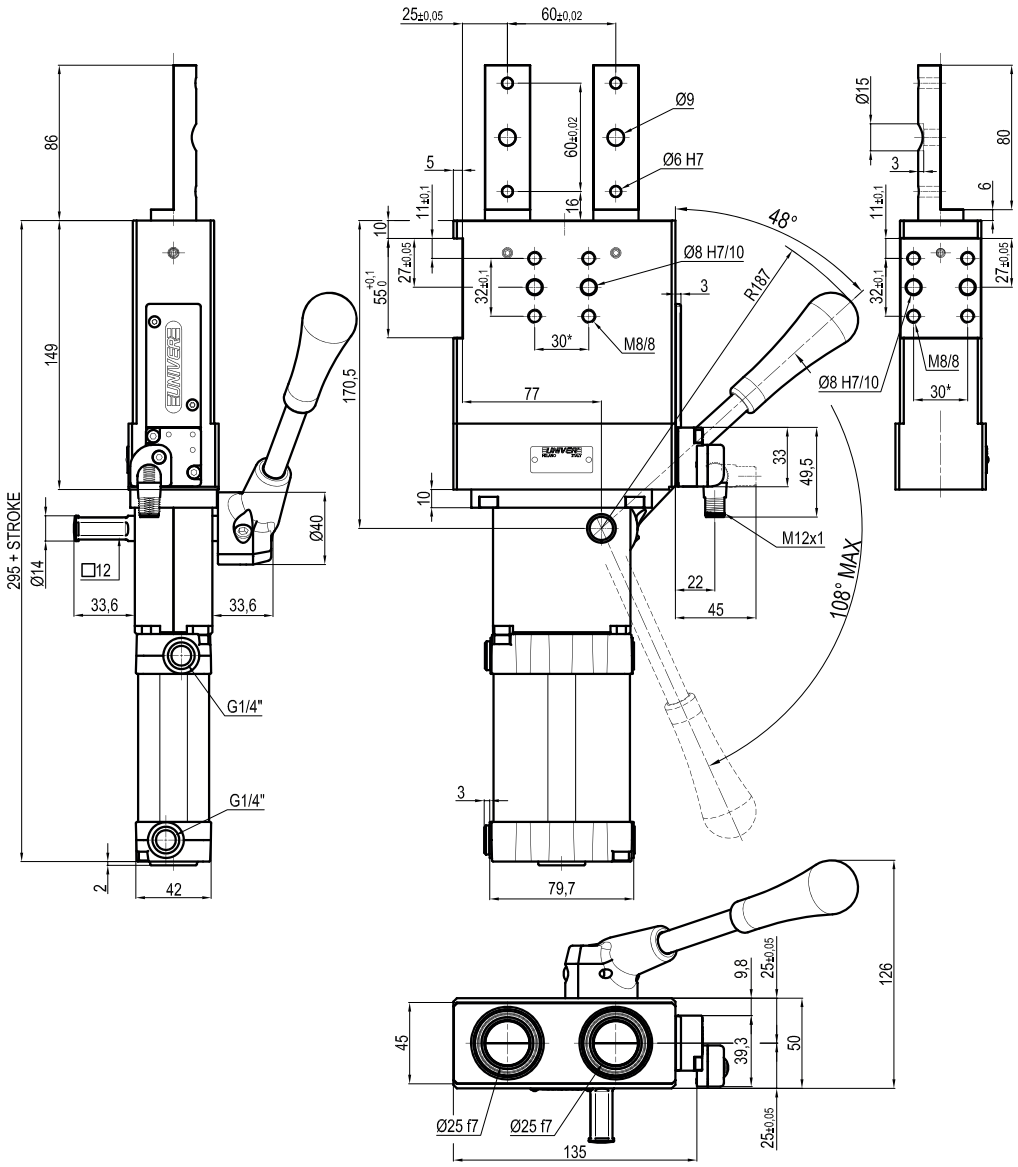

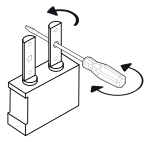

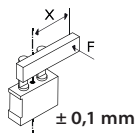

Max. Torque
20 Nm
X = 100 mm

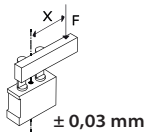

Max. deflection
moment 20 Nm
X = 100 mm

**TOLERANCE BETWEEN DOWELS ± 0,02 BETWEEN SCREW HOLES ± 0,1*

Sensors

Electronic (optical)

DF-K PNP M12
DF-J NPN M12
DF-Y PNP M12 White LED

Pneumatic

DF-UPNW

Accessories

Handlever

UBF255063

ULZ 40

Irreversible pneumatic retractable locating pin unit, single rod, Ø40 mm

Irreversible pneumatic retractable pin unit, single rod, typically used in welding applications to locate metal sheets in a definite position.

- Toggle-joint system to hold the position even in case of air loss
- Metal rod scraper
- Antirotation system
- Optical sensor
- Many rod end styles available
- Version with hand lever available (ULY)

CHARACTERISTICS

Operating temperature	**5° ÷ 45° C**
Min./Max. operating pressure	**0,4 / 0,6 MPa**
Bore Ø	**40 mm**
Min. Pull force (0,5 MPa)	**200 N**
Max Push force (0,5 MPa)**	**3100 N**
Max. Torque (6 Nm)	**± 0,06 mm**
Max. Deflection (7,5 Nm)	**± 0,03 mm**
Weight	**5,7 Kg**
Pneumatic supply ports	**G 1/8**
Sensor	**electronic (optical)**
Supply voltage	**10 ÷ 30 Vdc**
IP code	**IP 65**

***Max. push force at end stroke position*

IRREVERSIBLE

OPTICAL SENSOR

METAL SCRAPER

ANTI ROTATION

CODIFICATION KEY

UL	Z	40	040	**A**	**E**	**K**	0	
1	2	3	4	5	6	7	8	9

1 SERIES
UL = UNICLAMP locating pin unit

2 VERSION
Z = Pneumatic, with toggle-joint mechanism, single rod

3 SIZE
40 = Ø40 mm

4 STROKE
040 = 40 mm

5 ROD END STYLE
A = Rod for offset pins
B = Rod with profiled end
C = Rod with cross-profiled end inner Ø16 mm
D = Rod for offset pins with oversized dowel holes

6 ROD ORIENTATION
X = Symmetrical
E* = East
O* = West
N* = North
S* = South
*only with "A" and "D" rod style

7 SENSOR
N = No sensor (with protection plate)
K = Electronic sensor PNP, M12 (DF-K)
J = Electronic sensor NPN, optical (DF-J)
Y = Electronic sensor PNP, M12 (DF-Y) white LED

8 PRODUCT REVISION
Assigned by UNIVER

9 ATEX
X = ATEX option
See ATEX Catalogue for types and versions

A | Rod for offset pins

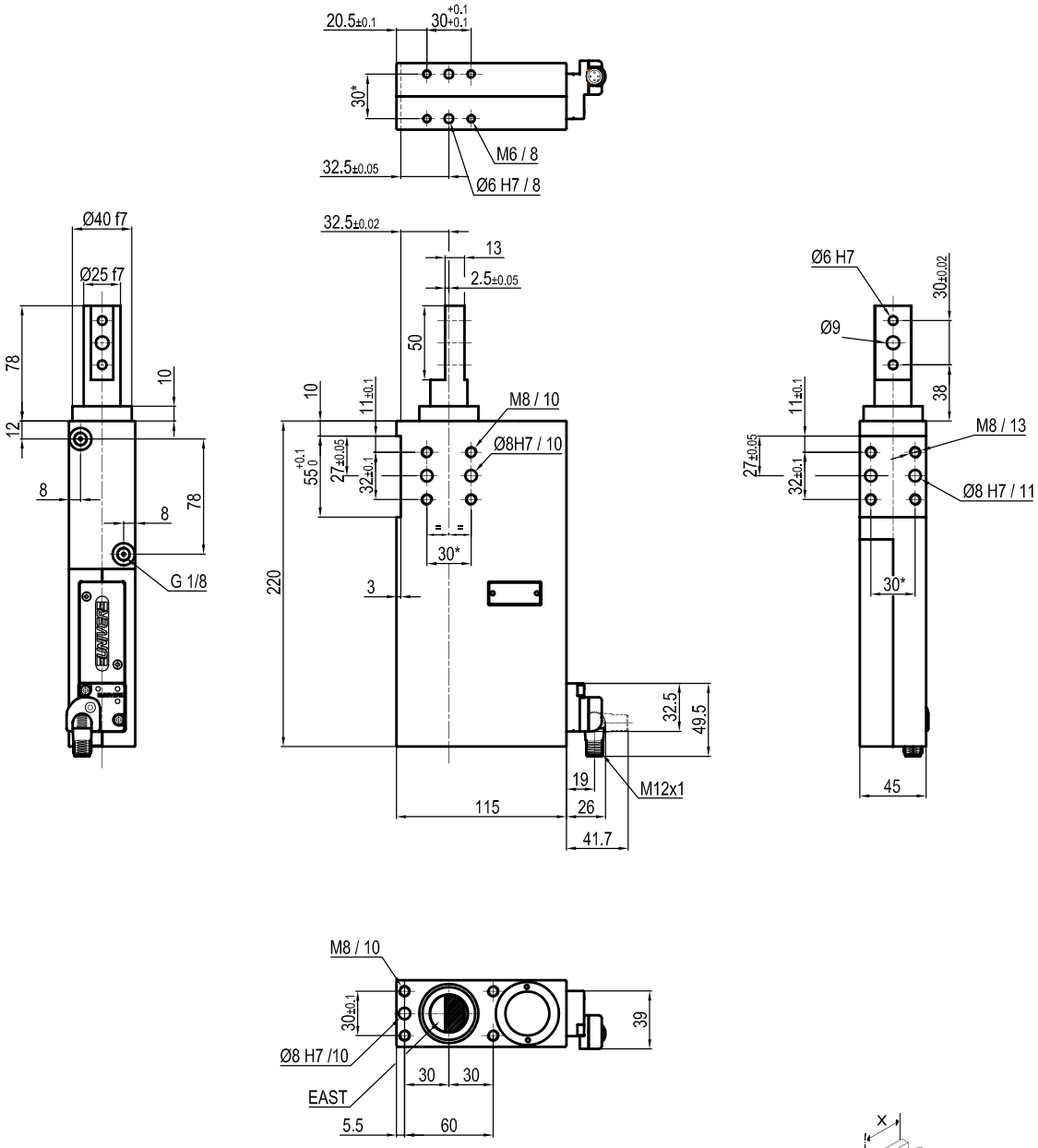

East **West** **North** **South**

**TOLERANCE BETWEEN DOWELS ± 0,02 BETWEEN SCREW HOLES ± 0,1*

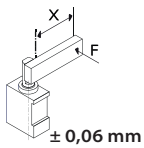

± 0,06 mm

Max. Torque
6 Nm
X = 100 mm

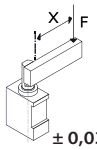

± 0,03 mm

Max. deflection
moment 7,5 Nm
X = 100 mm

Sensors

Electronic (optical)

DF-K PNP M12
DF-J NPN M12
DF-Y PNP M12 White LED

B Rod with profiled end

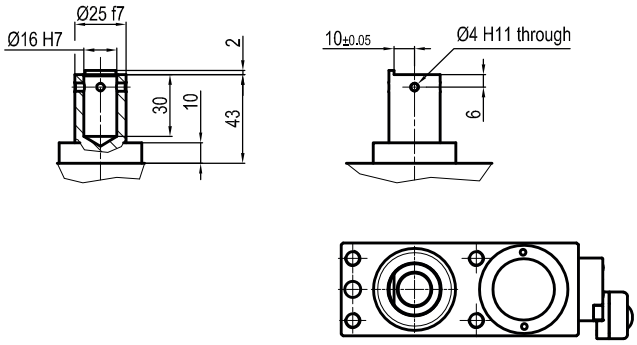

C Rod with cross-profiled end

Inner Ø16 mm

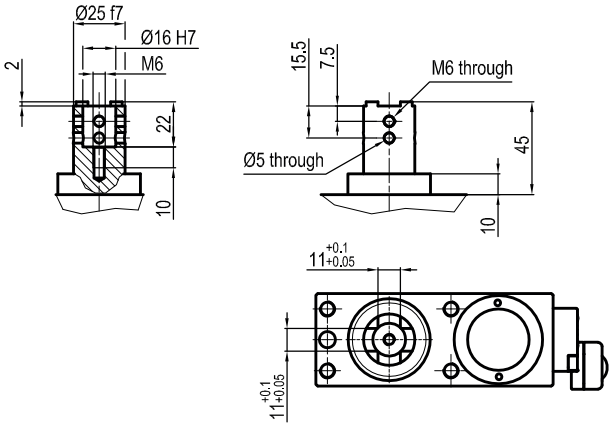

D Rod for offset pins

Oversized dowel holes

Max. deflection moment 7,5 Nm

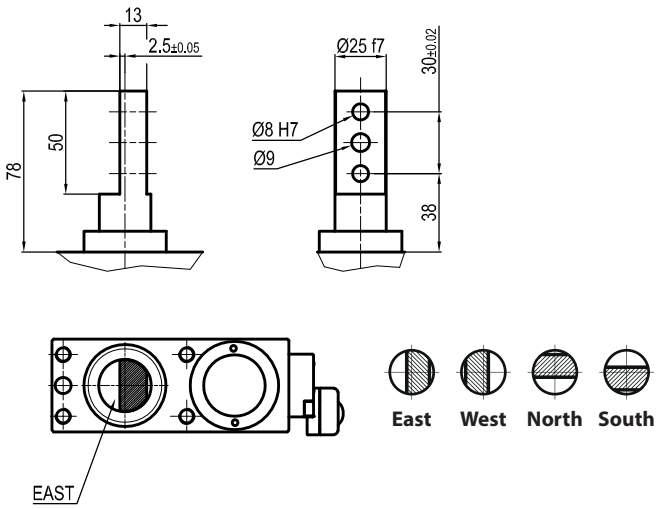

ULY 40

Irreversible pneumatic retractable locating pin unit, single rod, Ø40 mm with hand lever

Irreversible pneumatic retractable locating pin unit, single rod, typically used in welding applications to locate metal sheets in a definite position.

- Toggle-joint system to hold the position even in case of air loss
- Metal rod scraper
- Antirotation system
- Electronic sensor
- Many rod end styles available
- Ergonomic hand lever

CHARACTERISTICS

Operating temperature	**5° ÷ 45° C**
Min./Max. operating pressure	**0,4 / 0,6 MPa**
Bore Ø	**40 mm**
Min. Pull force (0,5 MPa)	**200 N**
Max Push force (0,5 MPa)**	**3100 N**
Max. Torque (6 Nm)	**± 0,06 mm**
Max. Deflection (7,5 Nm)	**± 0,03 mm**
Manual Max. Torque	**40 Nm**
Weight	**5,7 Kg**
Pneumatic supply ports	**G 1/8**
Sensor	**electronic (optical)**
Supply voltage	**10 ÷ 30 Vdc**
IP code	**IP 65**

***Max. push force at end stroke position*

IRREVERSIBLE

OPTICAL SENSOR

METAL SCRAPER

ANTI ROTATION

CODIFICATION KEY

UL	Y	40	040	**A**	**E**	**K**	0	
1	2	3	4	5	6	7	8	9

1 SERIES
UL = UNICLAMP locating pin unit

2 VERSION
Y = Pneumatic, with toggle-joint mechanism, single rod and hand lever

3 SIZE
40 = Ø40 mm

4 STROKE
040 = 40 mm

5 ROD END STYLE
A = Rod for offset pins
B = Rod with profiled end
C = Rod with cross-profiled end inner Ø16 mm
D = Rod for offset pins with oversized dowel holes

6 ROD ORIENTATION
X = Symmetrical
E* = East
O* = West
N* = North
S* = South

*only with "A" and "D" rod style

7 SENSOR
N = No sensor (with protection plate)
K = Electronic sensor PNP, M12 (DF-K)
J = Electronic sensor NPN, optical (DF-J)
Y = Electronic sensor PNP, M12 (DF-Y) white LED

8 PRODUCT REVISION
Assigned by UNIVER

9 ATEX
X = ATEX option
See ATEX Catalogue for types and versions

A | Rod for offset pins

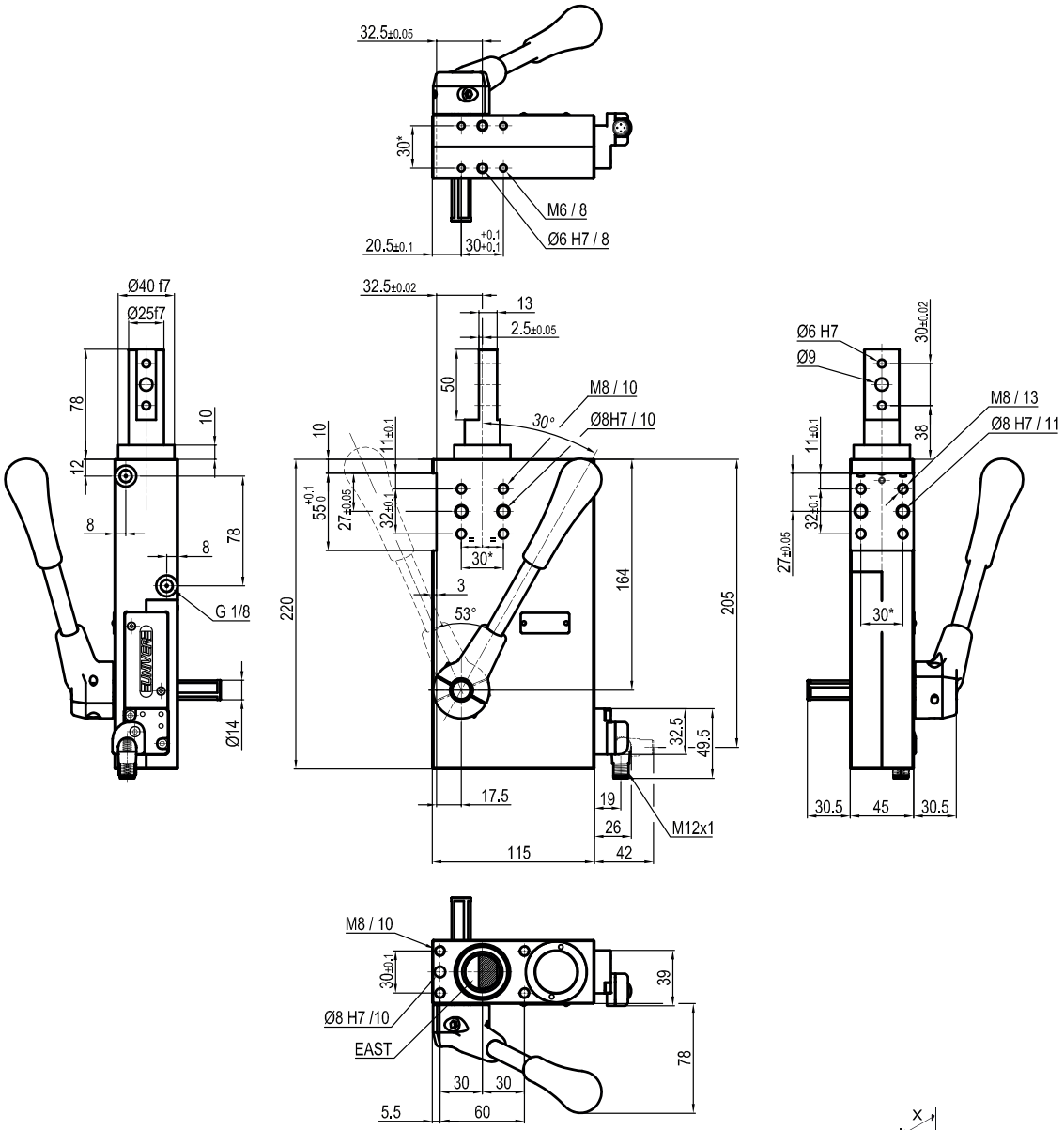

East **West** **North** **South**

**TOLERANCE BETWEEN DOWELS ± 0,02 BETWEEN SCREW HOLES ± 0,1*

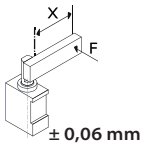

Max. Torque
6 Nm
X = 100 mm

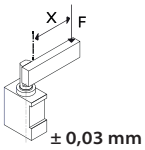

Max. deflection
moment 7,5 Nm
X = 100 mm

Sensors

Electronic (optical)

DF-K PNP M12
DF-J NPN M12
DF-Y PNP M12 White LED

Accessories

Handlever

UBF2540

B Rod with profiled end

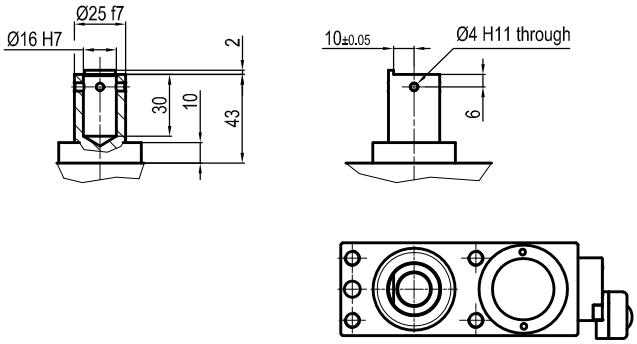

C Rod with cross-profiled end

Inner Ø16 mm

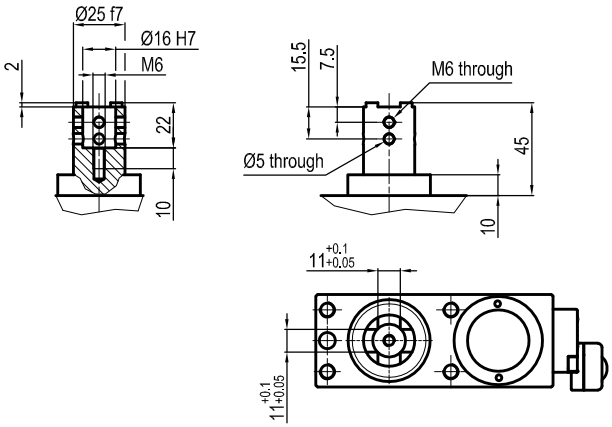

D Rod for offset pins

Oversized dowel holes

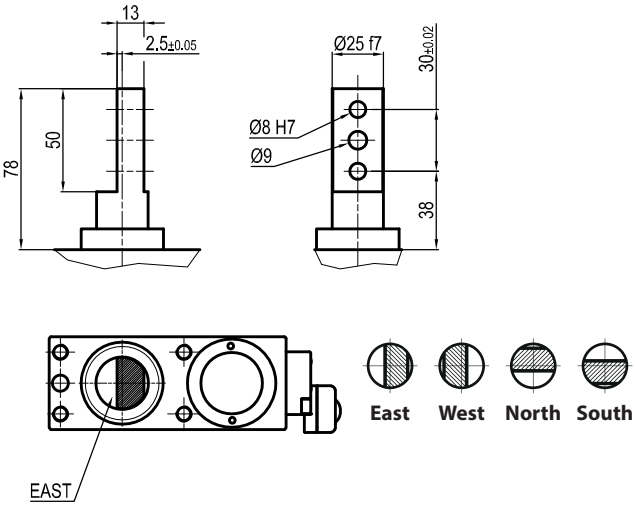

ULT 50

Irreversible pneumatic retractable locating pin unit, double rod, Ø50 mm

Irreversible pneumatic retractable locating pin unit, double rod, typically used in welding applications to locate metal sheets in a definite position.

- Metal rod scraper
- Optical sensor
- Rod orientation adjustable by the user
- Version with hand lever available (ULX)

CHARACTERISTICS

Operating temperature	**5° ÷ 45° C**
Min./Max. operating pressure	**0,4 / 0,6 MPa**
Bore Ø	**50 mm**
Min Pull force (0,5 MPa)	**500 N**
Max Push force (0,5 MPa)**	**7150 N**
Max. Torque (20 Nm)	**± 0,1 mm**
Max. Deflection (20 Nm)	**± 0,07 mm**
Max. side load	**400 N**
Max. deflection (40 mm stroke at max. load)	**0,1 mm**
Max. offset (from middle point)	**200 mm**
Weight	**7,3 Kg**
Pneumatic supply ports	**G1/8**
Sensor	**electronic (optical)**
Supply voltage	**10 ÷ 30 Vdc**
IP code	**IP 65**

***Max. push force at end stroke position*

IRREVERSIBLE

OPTICAL SENSOR

METAL SCRAPER

CODIFICATION KEY

UL	T	50	**040**	G	**K**	0	
1	2	3	4	5	6	7	8

1 SERIES
UL = UNICLAMP locating pin unit

2 VERSION
T = Pneumatic, with toggle-joint mechanism double orientable rod

3 SIZE
50 = Ø50 mm

4 STROKE
040 = 40 mm

5 ROD END STYLE
A = Rod for offset pins
G = Rod for offset pins (rod plane matching body middle axis)

6 SENSOR
N = No sensor (with protection plate)
K = Electronic sensor PNP, M12 (DF-K)
J = Electronic sensor NPN, optical (DF-J)
Y = Electronic sensor PNP, M12 (DF-Y) white LED

7 PRODUCT REVISION
Assigned by UNIVER

8 ATEX
X = ATEX option
See ATEX Catalogue for types and versions

A | Rod for offset pins

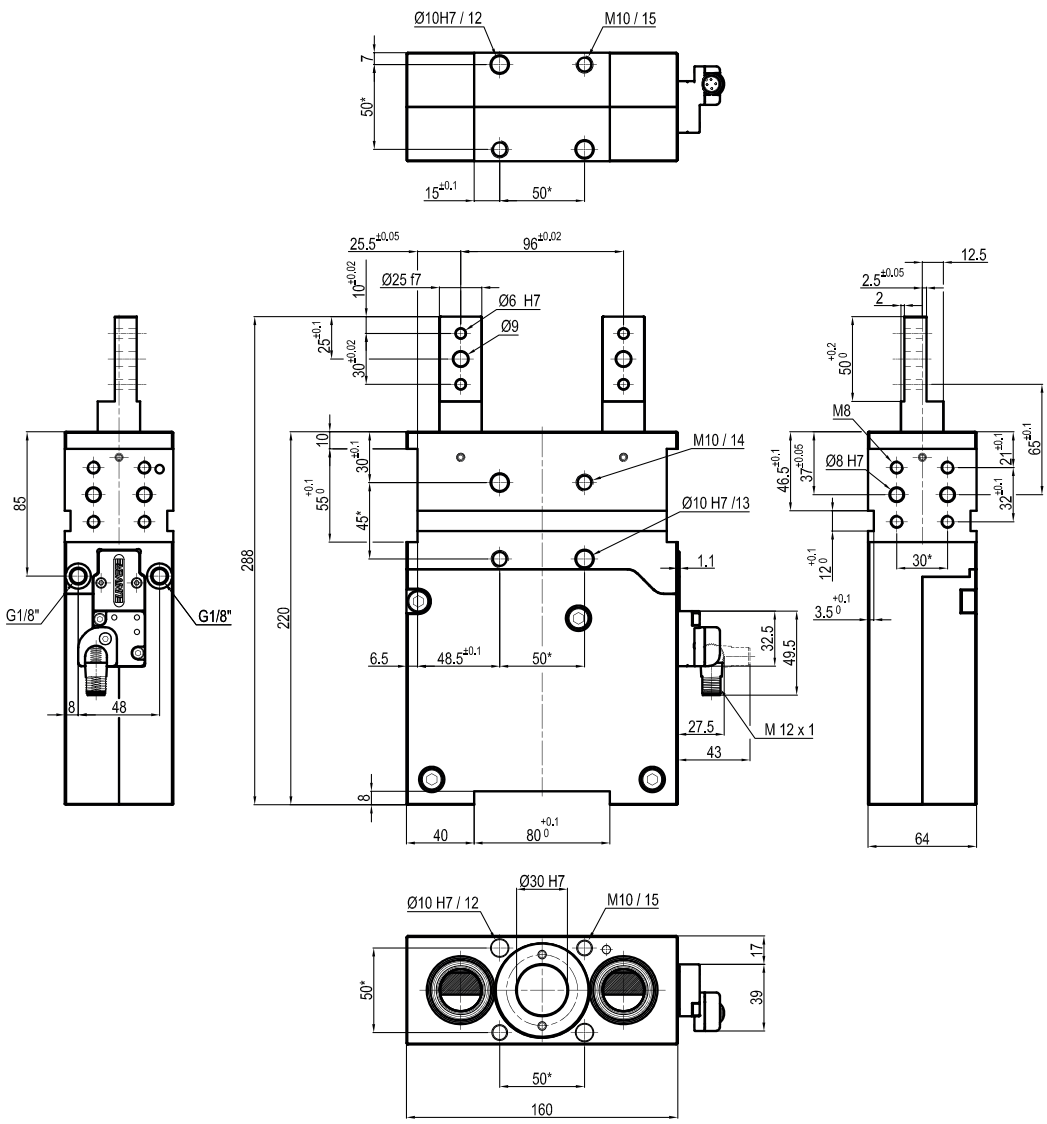

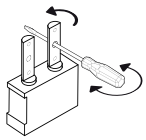

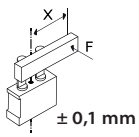

± 0,1 mm

Max. Torque
20 Nm
X = 100 mm

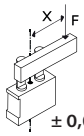

± 0,07 mm

Max. deflection
moment 20 Nm
X = 100 mm

**TOLERANCE BETWEEN DOWELS ± 0,02 BETWEEN SCREW HOLES ± 0,1*

Sensors

Electronic (optical)

DF-K PNP M12
DF-J NPN M12
DF-Y PNP M12 White LED

G Rod for offset pins

Rod plane matching body middle axis

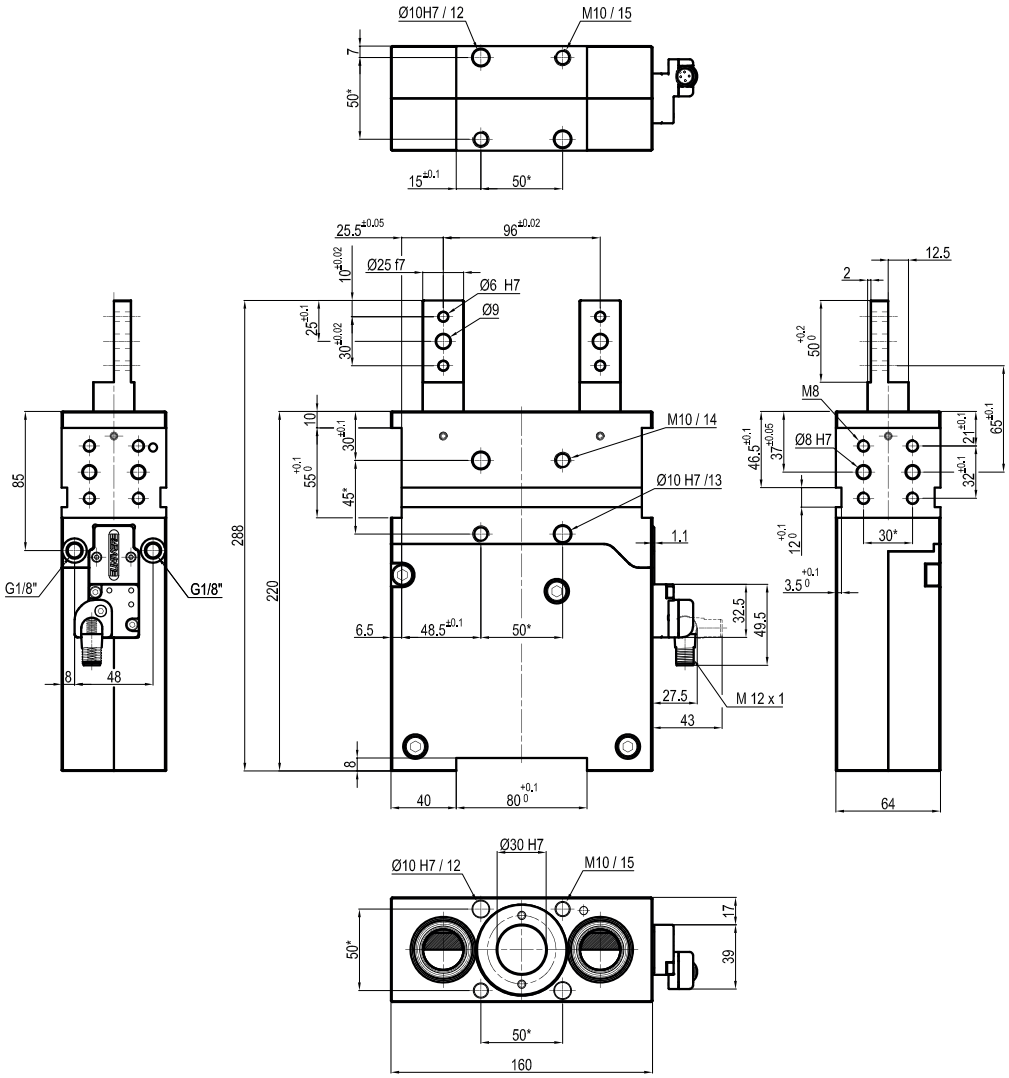

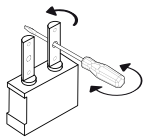

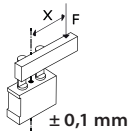

± 0,1 mm

Max. Torque
20 Nm
X = 100 mm

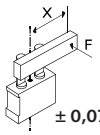

± 0,07 mm

Max. deflection
moment 20 Nm
X = 100 mm

**TOLERANCE BETWEEN DOWELS ± 0,02 BETWEEN SCREW HOLES ± 0,1*

Sensors

Electronic (optical)

DF-K PNP M12
DF-J NPN M12
DF-Y PNP M12 White LED

ULX 50

Irreversible pneumatic retractable locating pin unit, double rod, Ø50mm with hand lever

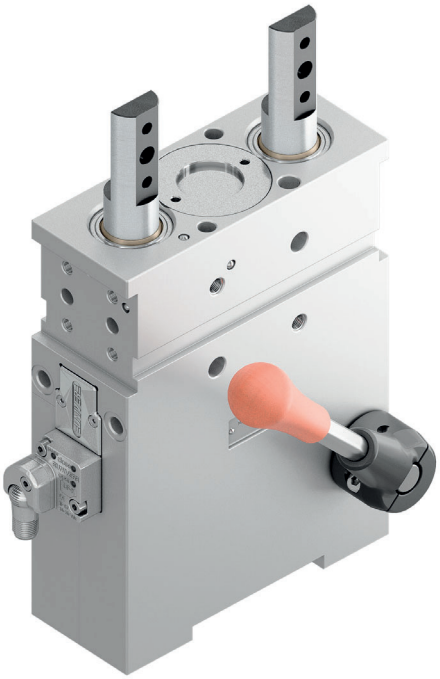

Irreversible pneumatic retractable locating pin unit, double rod, typically used in welding applications to locate metal sheets in a definite position.

- Metal rod scraper
- Optical sensor
- Rod orientation adjustable by the user

CHARACTERISTICS

Operating temperature	**5° ÷ 45° C**
Min./Max. operating pressure	**0,4 / 0,6 MPa**
Bore Ø	**50 mm**
Min. Pull force (0,5 MPa)	**500 N**
Max Push force (0,5 MPa)**	**7150 N**
Max. Torque (20 Nm)	**± 0,1 mm**
Max. Deflection (20 Nm)	**± 0,07 mm**
Max. side load	**400 N**
Max. deflection (40 mm stroke at max. load)	**0,1 mm**
Max. offset (from middle point)	**200 mm**
Weight	**7,3 Kg**
Pneumatic supply ports	**G1/8**
Sensor	**electronic (optical)**
Supply voltage	**10 ÷ 30 Vdc**
IP code	**IP 65**

***Max. push force at end stroke position*

IRREVERSIBLE

OPTICAL SENSOR

METAL SCRAPER

CODIFICATION KEY

UL	X	50	040	G	K	0	
1	2	3	4	5	6	7	8

1 SERIES
UL = UNICLAMP locating pin unit

2 VERSION
X = Pneumatic, with toggle-joint mechanism double orientable rod and hand lever

3 SIZE
50 = Ø50 mm

4 STROKE
040 = 40 mm

5 ROD END STYLE
A = Rod for offset pins
G = Rod for offset pins (rod plane matching body middle axis)

6 SENSOR
N = No sensor (with protection plate)
K = Electronic sensor PNP, M12 (DF-K)
J = Electronic sensor NPN, optical (DF-J)
Y = Electronic sensor PNP, M12 (DF-Y) white LED

7 PRODUCT REVISION
Assigned by UNIVER

8 ATEX
X = ATEX option
See ATEX Catalogue for types and versions

A | Rod for offset pins

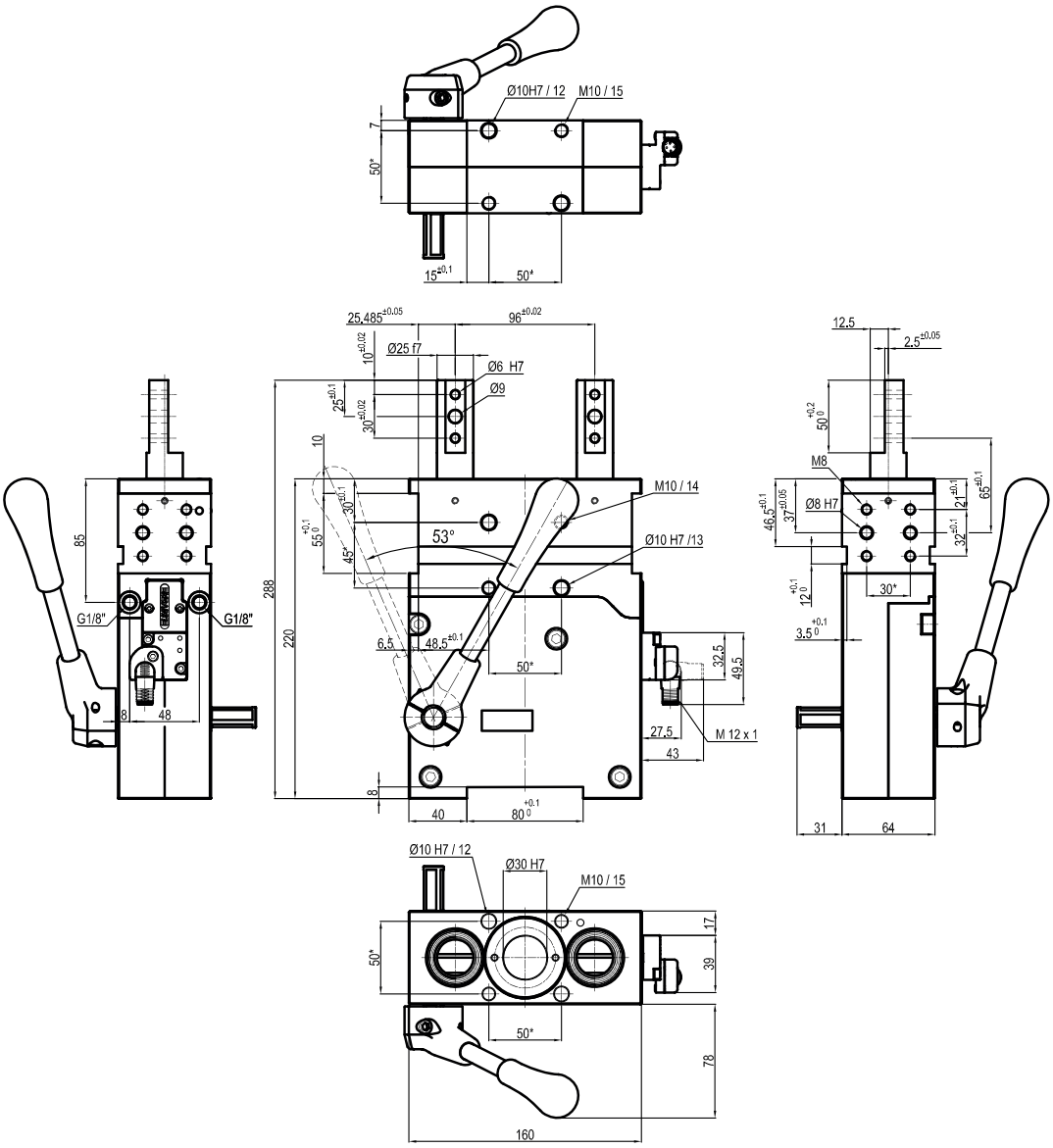

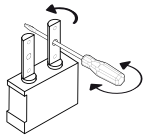

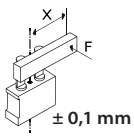

± 0,1 mm

Max. Torque
20 Nm
X = 100 mm

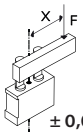

± 0,07 mm

Max. deflection
moment 20 Nm
X = 100 mm

**TOLERANCE BETWEEN DOWELS ± 0,02 BETWEEN SCREW HOLES ± 0,1*

Sensors

Electronic (optical)

DF-K PNP M12
DF-J NPN M12
DF-Y PNP M12 White LED

Accessories

Handlever

UBF255063

G | Rod for offset pins
Rod plane matching body middle axis

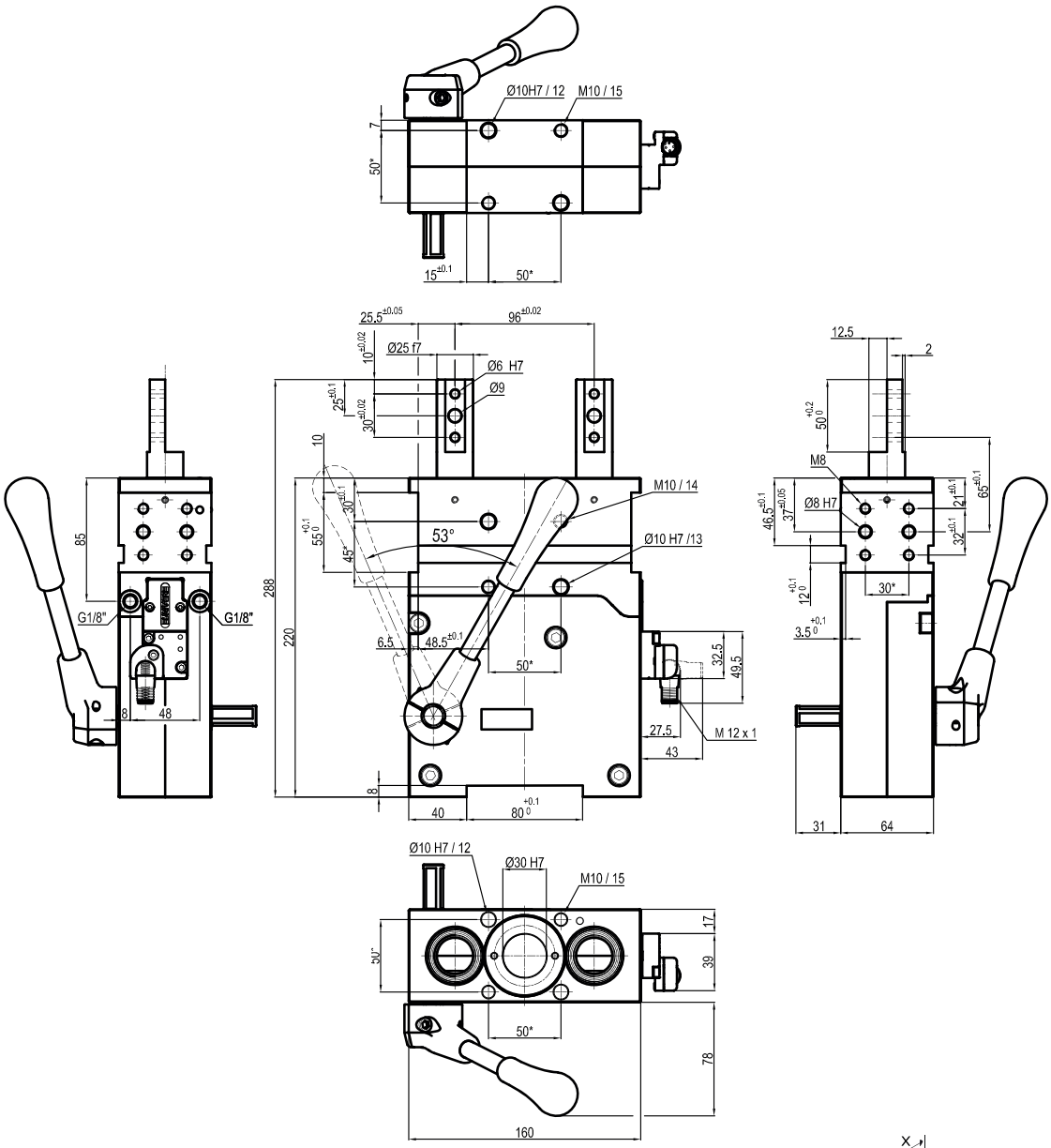

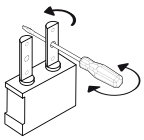

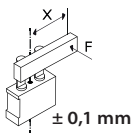

± 0,1 mm

Max. Torque
20 Nm
X = 100 mm

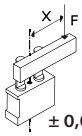

± 0,07 mm

Max. deflection
moment 20 Nm
X = 100 mm

**TOLERANCE BETWEEN DOWELS ± 0,02 BETWEEN SCREW HOLES ± 0,1*

Sensors

Electronic (optical)

DF-K PNP M12
DF-J NPN M12
DF-Y PNP M12 White LED

Accessories

Handlever

UBF255063

ULL 50

Manual retractable locating pin unit, Ø50 mm with hand lever

Manual retractable locating pin unit, single rod, with hand lever typically used in welding applications to locate metal sheets in a definite position.

- Metal rod scraper
- Antirotation system
- Electronic sensor
- Many rod end styles available
- Ergonomic hand lever

CHARACTERISTICS

Operating temperature	**5° ÷ 45° C**
Min./Max. operating pressure	**0,4 / 0,6 MPa**
Bore Ø	**50 mm**
Max. Torque (6 Nm)	**± 0,06 mm**
Max. Deflection (7,5 Nm)	**± 0,03 mm**
Weight	**2,5 Kg**
Sensor	**electronic (optical)**
Supply voltage	**10 ÷ 30 Vdc**
IP code	**IP 65**

OPTICAL SENSOR

METAL SCRAPER

ANTI ROTATION

CODIFICATION KEY

UL	L	50	**040**	**C**	**X**	**K**	0	
1	2	3	4	5	6	7	8	9

1 SERIES
UL = UNICLAMP locating pin unit

2 VERSION
L = Manual with hand lever

3 SIZE
50 = Ø50 mm

4 STROKE
040 = 40 mm

5 ROD END STYLE
A = Rod for offset pins
B = Rod with profled end
C = Rod with cross-profiled end inner Ø 16 mm
D = Rod for offset pins with oversized dowel holes
E = Rod with cross profiled end inner Ø 10 mm
F = Compatible with NAAMS, inner Ø 16
H = Rod with flat end, inner Ø10 mm
I = Rod with flat end, inner Ø12 mm
L* = Rod with inner Ø12 mm
M* = Rod with inner Ø 20 mm
*compatible with CNOMO standard

6 ROD ORIENTATION
X = Symmetrical
E* = East
O* = West
N* = North
S* = South
*only with "A" and "D" rod style

7 SENSOR
N = No sensor (with protection plate)
K = Electronic sensor PNP, M12 (DF-K)
D = Pneumatic sensor (DF-UPNW)
J = Electronic sensor NPN, optical (DF-J)
Y = Electronic sensor PNP, M12 (DF-Y) white LED

8 PRODUCT REVISION
Assigned by UNIVER

9 ATEX
X = ATEX option
See ATEX Catalogue for types and versions

A | Rod for offset pins

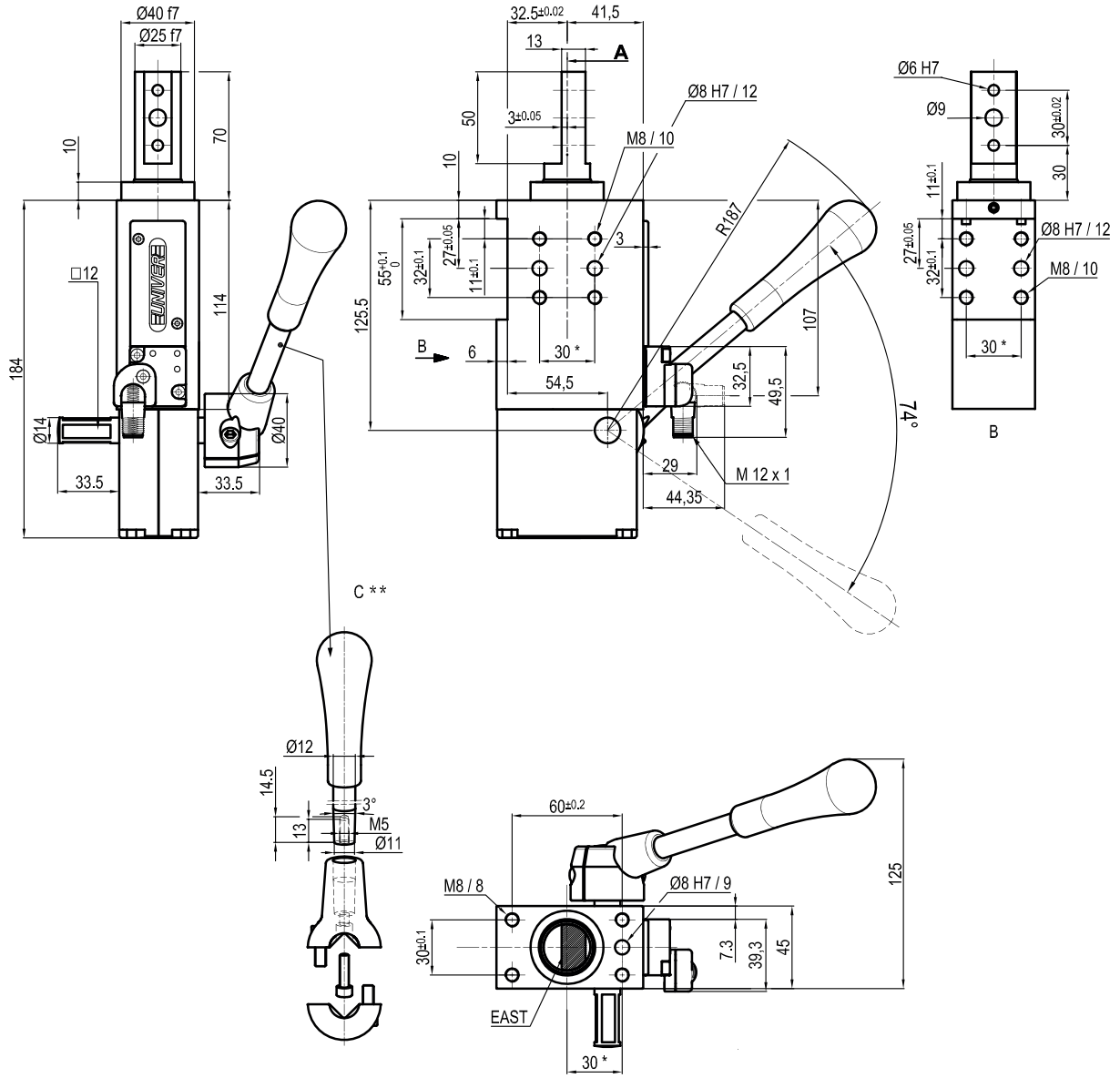

East **West** **North** **South**

**TOLERANCE BETWEEN DOWELS ± 0,02 BETWEEN SCREW HOLES ± 0,1*
***DIMENSIONS TO BE RESPECTED IN CASE OTHER MANUAL LEVERS ARE USED*

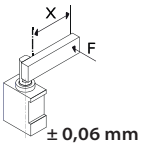

Max. Torque
6 Nm
X = 100 mm

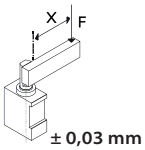

Max. deflection
moment 7,5 Nm
X = 100 mm

Sensors

Electronic (optical)

DF-K PNP M12
DF-J NPN M12
DF-Y PNP M12 White LED

Pneumatic

DF-UPNW

Accessories

Handlever

UBF255063

B Rod with profiled end

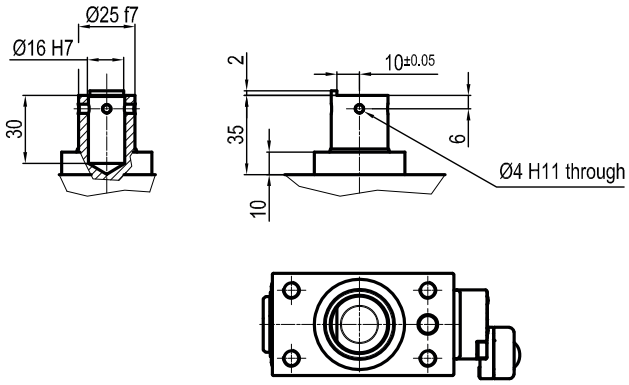

C Rod with cross-profiled end

Inner Ø16 mm

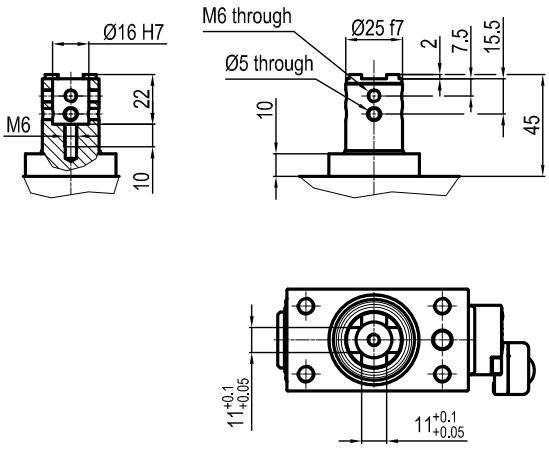

D Rod for offset pins

Oversized dowel holes

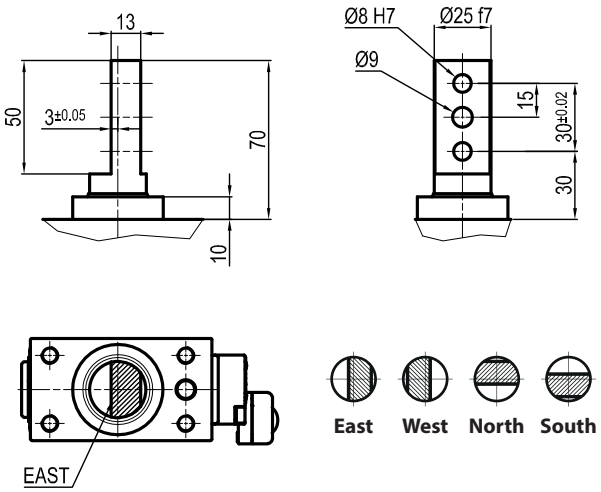

E Rod with cross-profiled end

Inner Ø10 mm

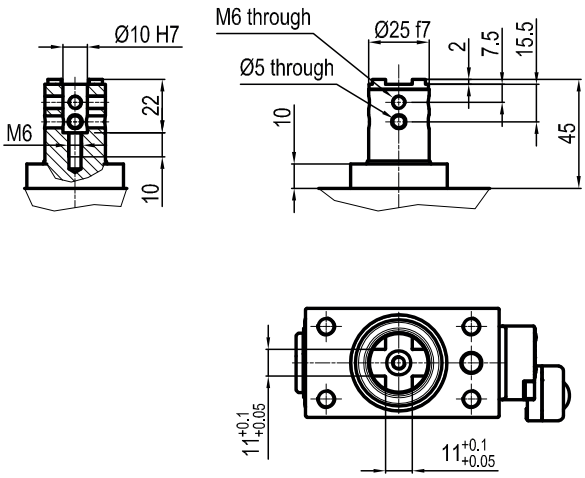

F Compatible with NAAMS

Inner Ø16 mm

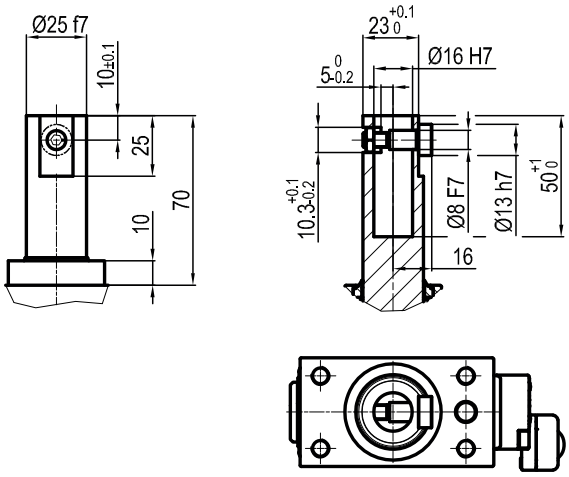

H Rod with flat end

Inner Ø10 mm

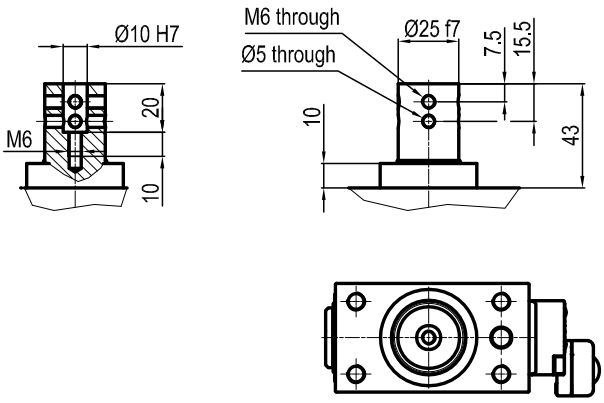

I Rod with flat end
Inner Ø12 mm

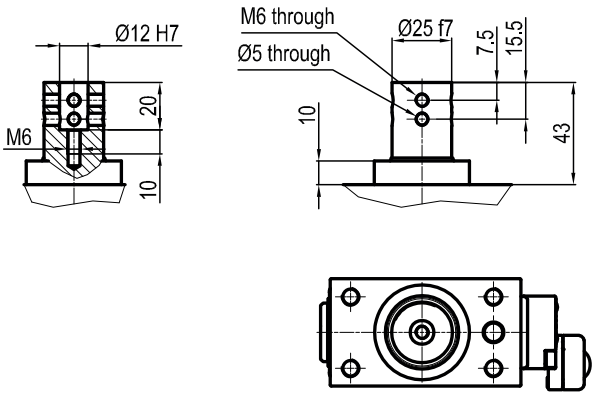

L Rod compatible with CNOMO standard
Inner Ø12 mm

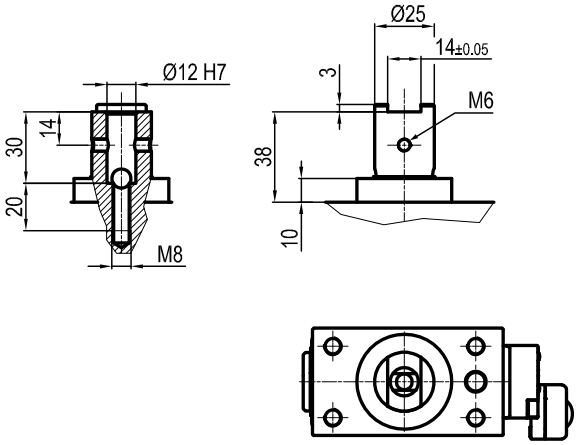

M Rod compatible with CNOMO standard
Inner Ø20 mm

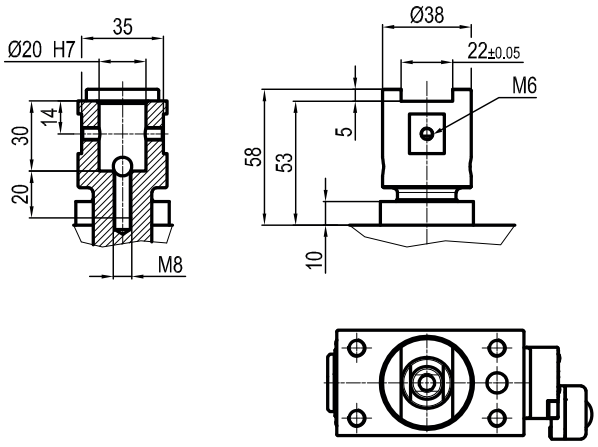

LCG 50

Pneumatic retractable pin units, Ø50 mm, single rod CNOMO standard

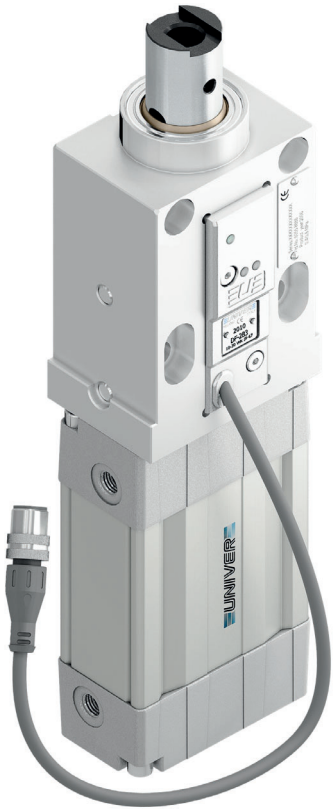

Pneumatic retractable pin unit, conforming to CNOMO standard, single rod, typically used in welding applications to locate metal sheets in a definite position.

- Metal rod scraper
- Antirotation system
- Electronic sensor with M12 connector
- Rod's inner diameter Ø12 and Ø20 available

CHARACTERISTICS

Operating temperature	**5° ÷ 45° C**
Min./Max. operating pressure	**0,4 / 0,6 MPa**
Bore Ø	**50 mm**
Weight	**2,1 Kg**
Pneumatic supply ports	**G1/8 on both sides**
Sensor	**electronic with M12**
Supply voltage	**10 ÷ 30 Vdc**
IP code	**IP 65**

LIGHTWEIGHT

METAL SCRAPER

ANTI ROTATION

CODIFICATION KEY

LC	G	50	**050**	U	**12**	R
1	2	3	4	5	6	7

1 SERIES
LC = Locating retractable pin unit conforming to CNOMO standard

2 VERSION
G = Pneumatic, single rod

3 SIZE
50 = Ø50 mm

4 STROKE
025 = 25 mm
050 = 50 mm

5 SENSOR
U = Electronic sensor, M12 (DF-2B3)

6 ROD'S INNER Ø
12 = Ø12 mm
20 = Ø20 mm

7 ROD SCRAPER
R = Metallic rod scraper

12 | Rod's inner Ø12 mm

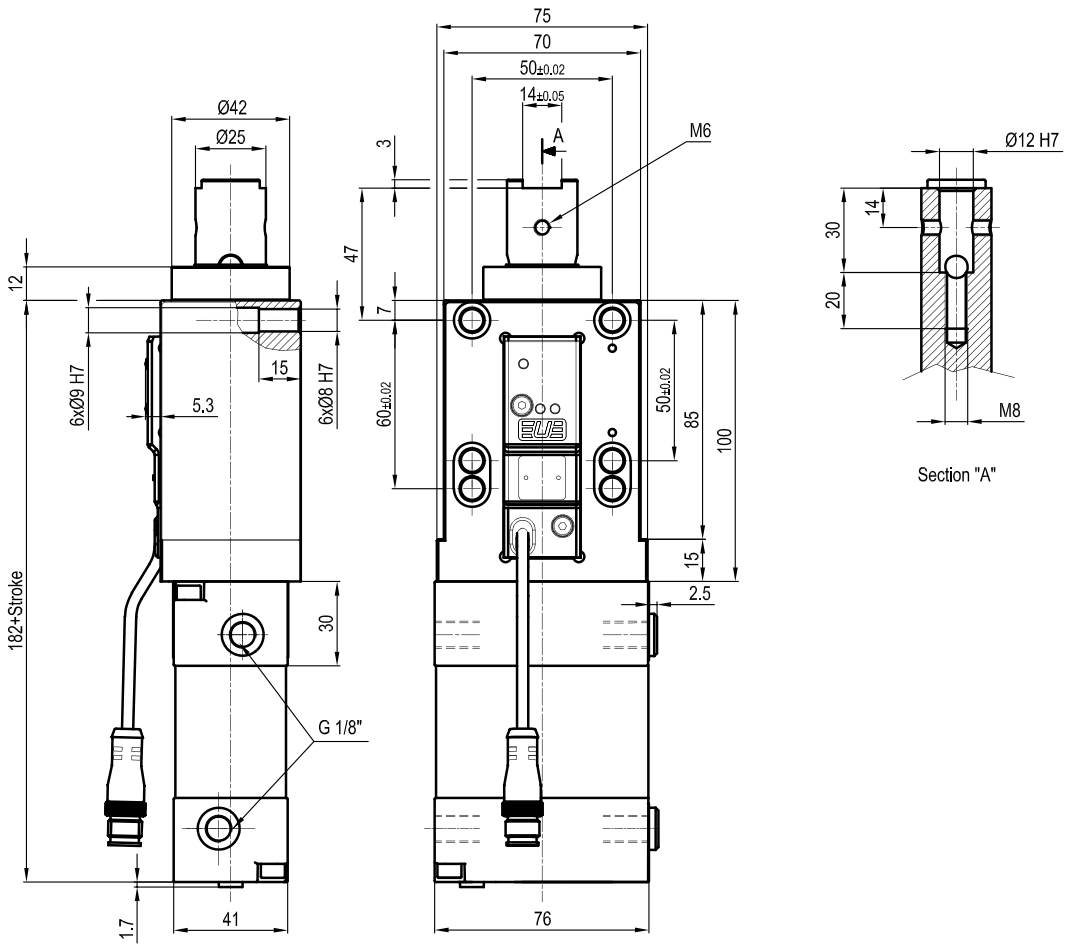

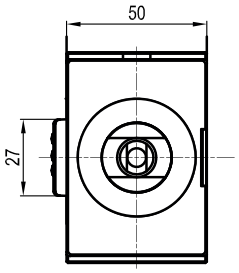

20 | Rod's inner Ø20 mm

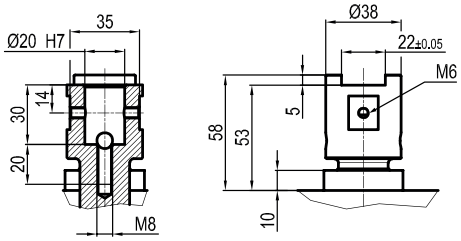

Sensors

Electronic

DF-2B3

LCG 63

Pneumatic retractable pin units, Ø63 mm, single rod CNOMO standard

Pneumatic retractable pin unit, conforming to CNOMO standard, single rod, typically used in welding applications to locate metal sheets in a definite position.

- Metal rod scraper
- Antirotation system
- Electronic sensor with M12 connector
- Rod's inner diameter Ø12 and Ø20 available

CHARACTERISTICS

Operating temperature	**5° ÷ 45° C**
Min./Max. operating pressure	**0,4 / 0,6 MPa**
Bore Ø	**63 mm**
Weight	**2,5 Kg**
Pneumatic supply ports	**G1/8 on both sides**
Sensor	**electronic with M12**
Supply voltage	**10 ÷ 30 Vdc**
IP code	**IP 65**

LIGHTWEIGHT

METAL SCRAPER

ANTI ROTATION

CODIFICATION KEY

LC	G	63	**050**	U	**12**	R
1	2	3	4	5	6	7

1 SERIES
LC = Locating retractable pin unit conforming to CNOMO standard

2 VERSION
G = Pneumatic, single rod

3 SIZE
63 = Ø63 mm

4 STROKE
025 = 25 mm
050 = 50 mm

5 SENSOR
U = Electronic sensor, M12 (DF-2B3)

6 ROD'S INNER Ø
12 = Ø12 mm
20 = Ø20 mm

7 ROD SCRAPER
R = Metallic rod scraper

12 | Rod's inner Ø12 mm

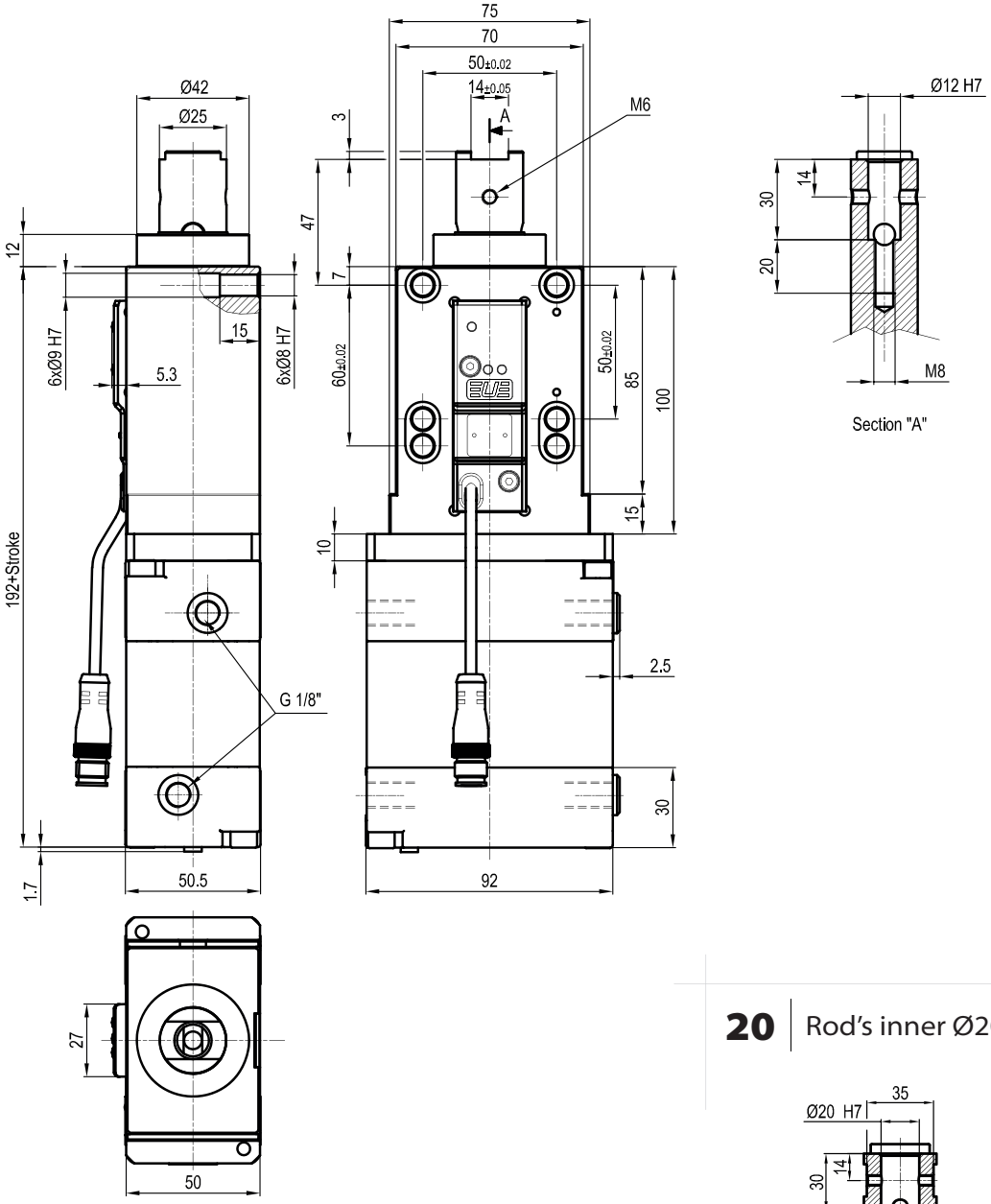

20 | Rod's inner Ø20 mm

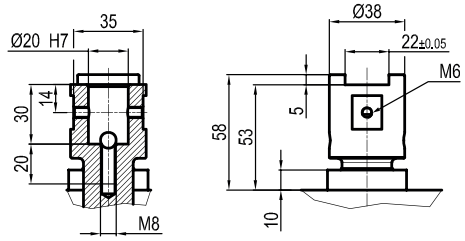

Sensors

Electronic

DF-2B3

LCQ 50

Pneumatic retractable pin units, Ø50 mm, single rod, CNOMO standard with hand lever

Pneumatic retractable pin unit, conforming to CNOMO standard, single rod and hand lever. Typically used in welding applications to locate metal sheets in a definite position.

- Metal rod scraper
- Antirotation system
- Electronic sensor with M12 connector
- Rod's inner diameter Ø12 and Ø20 available

CHARACTERISTICS

Operating temperature	**5° ÷ 45° C**
Min./Max. operating pressure	**0,4 / 0,6 MPa**
Bore Ø	**50 mm**
Weight	**3,2 Kg**
Pneumatic supply ports	**G1/8 on both sides**
Sensor	**electronic with M12**
Supply voltage	**10 ÷ 30 Vdc**
IP code	**IP 65**

LIGHTWEIGHT

METAL SCRAPER

ANTI ROTATION

CODIFICATION KEY

LC	Q	50	**050**	U	**12**	R
1	2	3	4	5	6	7

1 SERIES
LC = Locating retractable pin unit conforming to CNOMO standard

2 VERSION
Q = Pneumatic, single rod with hand lever

3 SIZE
50 = Ø50 mm

4 STROKE
025 = 25 mm
050 = 50 mm

5 SENSOR
U = Electronic sensor, M12 (DF-2B3)

6 ROD'S INNER Ø
12 = Ø12 mm
20 = Ø20 mm

7 ROD SCRAPER
R = Metallic rod scraper

12 Rod's inner Ø12 mm

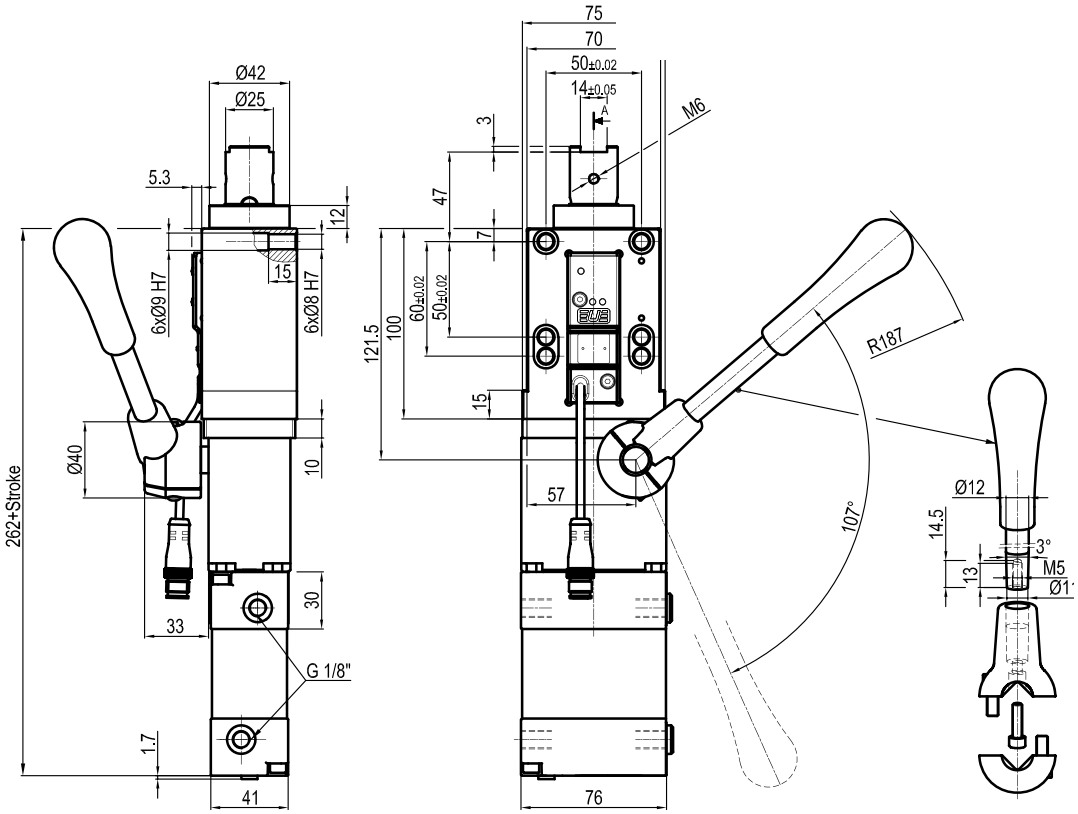

20 Rod's inner Ø20 mm

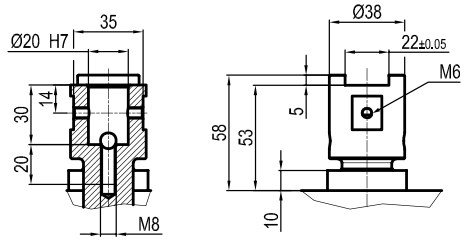

Sensors

Electronic

DF-2B3

Accessories

Handlever

UBF255063

LCQ 63

Pneumatic retractable pin units, Ø63 mm, single rod, CNOMO standard with hand lever

Pneumatic retractable pin unit, conforming to CNOMO standard, single rod and hand lever. Typically used in welding applications to locate metal sheets in a definite position.

- Metal rod scraper
- Antirotation system
- Electronic sensor with M12 connector
- Rod's inner diameter Ø12 and Ø20 available

CHARACTERISTICS

Operating temperature	**5° ÷ 45° C**
Min./Max. operating pressure	**0,4 / 0,6 MPa**
Bore Ø	**63 mm**
Weight	**3,6 Kg**
Pneumatic supply ports	**G1/8 on both sides**
Sensor	**electronic with M12**
Supply voltage	**10 ÷ 30 Vdc**
IP code	**IP 65**

LIGHTWEIGHT

METAL SCRAPER

ANTI ROTATION

CODIFICATION KEY

LC	Q	63	**050**	U	**12**	R
1	2	3	4	5	6	7

1 SERIES
LC = Locating retractable pin unit conforming to CNOMO standard

2 VERSION
Q = Pneumatic, single rod with hand lever

3 SIZE
63 = Ø63 mm

4 STROKE
025 = 25 mm
050 = 50 mm

5 SENSOR
U = Electronic sensor, M12 (DF-2B3)

6 ROD'S INNER Ø
12 = Ø12 mm
20 = Ø20 mm

7 ROD SCRAPER
R = Metallic rod scraper

12 Rod's inner Ø12 mm

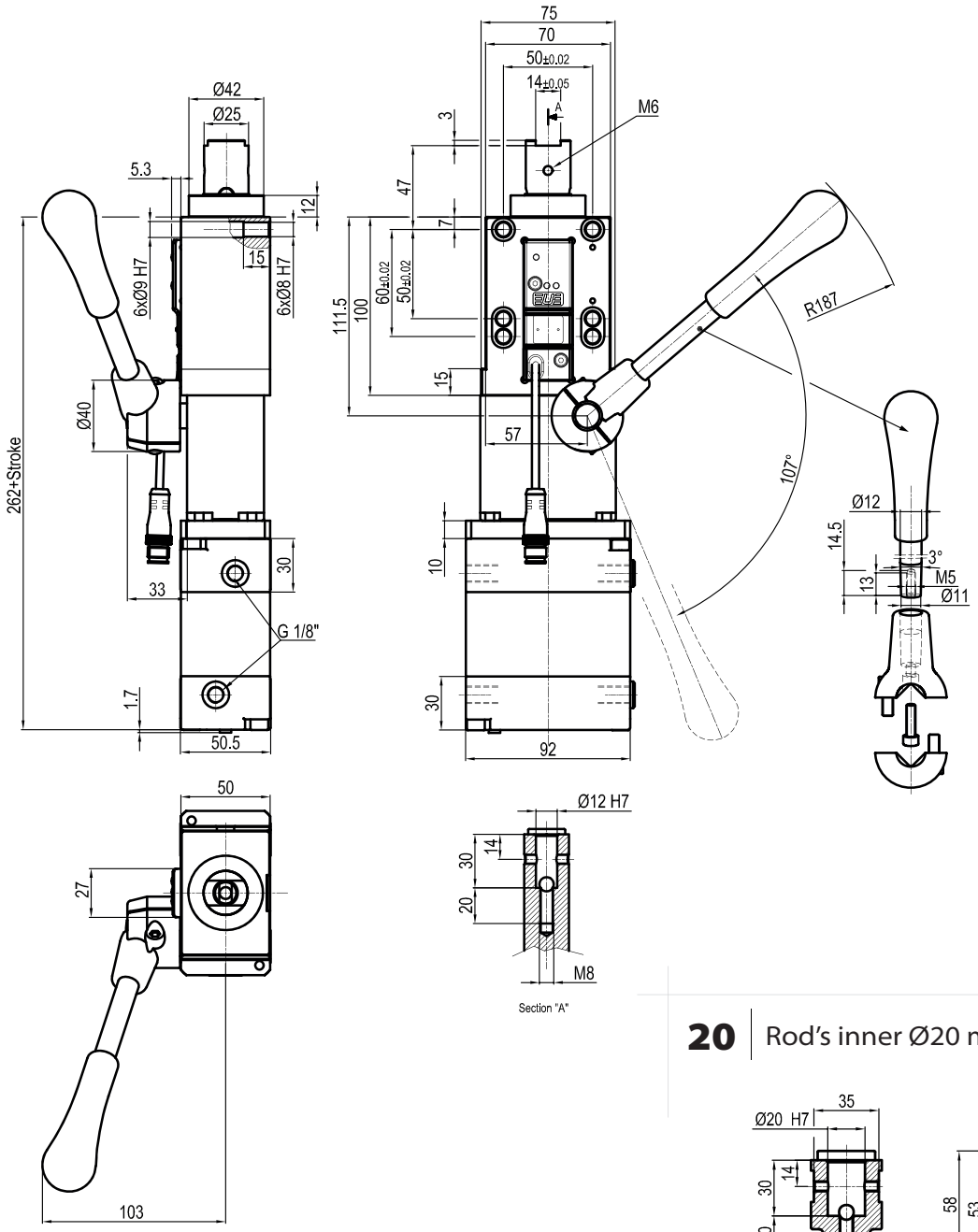

20 Rod's inner Ø20 mm

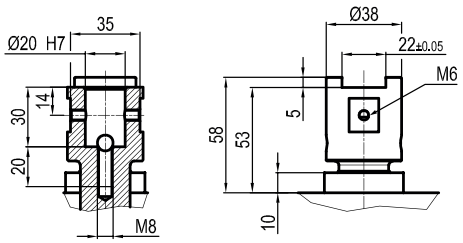

Sensors

Electronic

DF-2B3

Accessories

Handlever

UBF255063

4

UNICLAMP

PNEUMATIC GRIPPER UNITS

Ø40mm

UGP40 2
UGM40 8

Ø32-40mm

UGPS32 14
UGPS40 19

UGP 40

Pneumatic gripper unit Ø40 mm

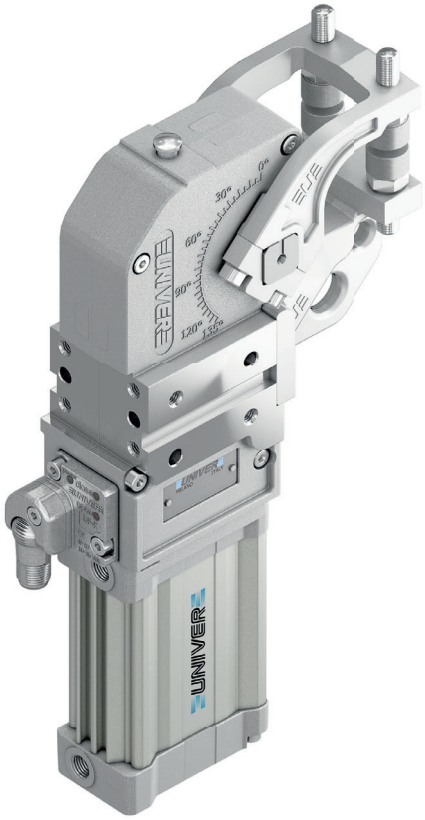

Pneumatic gripper unit Ø40 mm typically used on End of Arm Tooling Systems for handling work pieces.

- Stepless adjustable opening angle
- Toggle-joint mechanism
- Integrated compensation
- Double or single movement
- Tips customisation
- Version with hand lever available
- Fixing pattern on 3 sides

CHARACTERISTICS

Operating temperature	**5° ÷ 45° C**
Min./Max. Operating pressure	**0,4 / 0,6 MPa**
Opening angle*	**0° ÷ 95°**
Bore Ø	**40 mm**
Holding moment	**600 Nm**
Clamping moment (0,5 Mpa)	**170 N**
Weight (Tips not included)	**2,1 Kg**
Tip weight (each)	**0,3 Kg**
Pneumatic supply ports	**G1/8 on both sides**
Sensor	**electronic (optical)**
Supply voltage	**10 ÷ 30 Vdc**
IP code	**IP 65**

**The opening angle range may vary according to the arm position and style.*

COMPENSATION

IRREVERSIBLE

ANGLE ADJUSTMENT

OPTICAL SENSOR

CODIFICATION KEY

UG	P	40	V	B	S	K	0	
1	2	3	4	5	6	7	8	9

1 SERIES
UG = UNICLAMP Gripper units

2 VERSION
P = Pneumatic

3 SIZE
40 = Ø40 mm

4 JAW POSITION

V = 90°

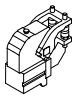

O = 180°

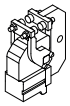

5 MOVEMENT
H = Double movement; no tips*
F = Double movement; 1 pair of flat tips*
B = Double movement; 2 pairs of flat tips*
L = Single movement; 2 pairs of flat tips*
1 = Single movement; 1 pair of knurled tips
2 = Single movement; 2 pairs of knurled tips

**available only for "V" jaw position*

6 JAW MATERIAL
S = Steel jaws

7 SENSOR
N = No sensor (with protection plate)
K = Electronic sensor PNP, M12 (DF-K)
J = Electronic sensor NPN, optical (DF-J)
Y = Electronic sensor PNP, M12 (DF-Y) white LED

8 PRODUCT REVISION
Assigned by UNIVER

9 ATEX
X = ATEX option
See ATEX Catalogue for types and versions

V/H | Jaw position and Movement

90° - Double movement; No tips

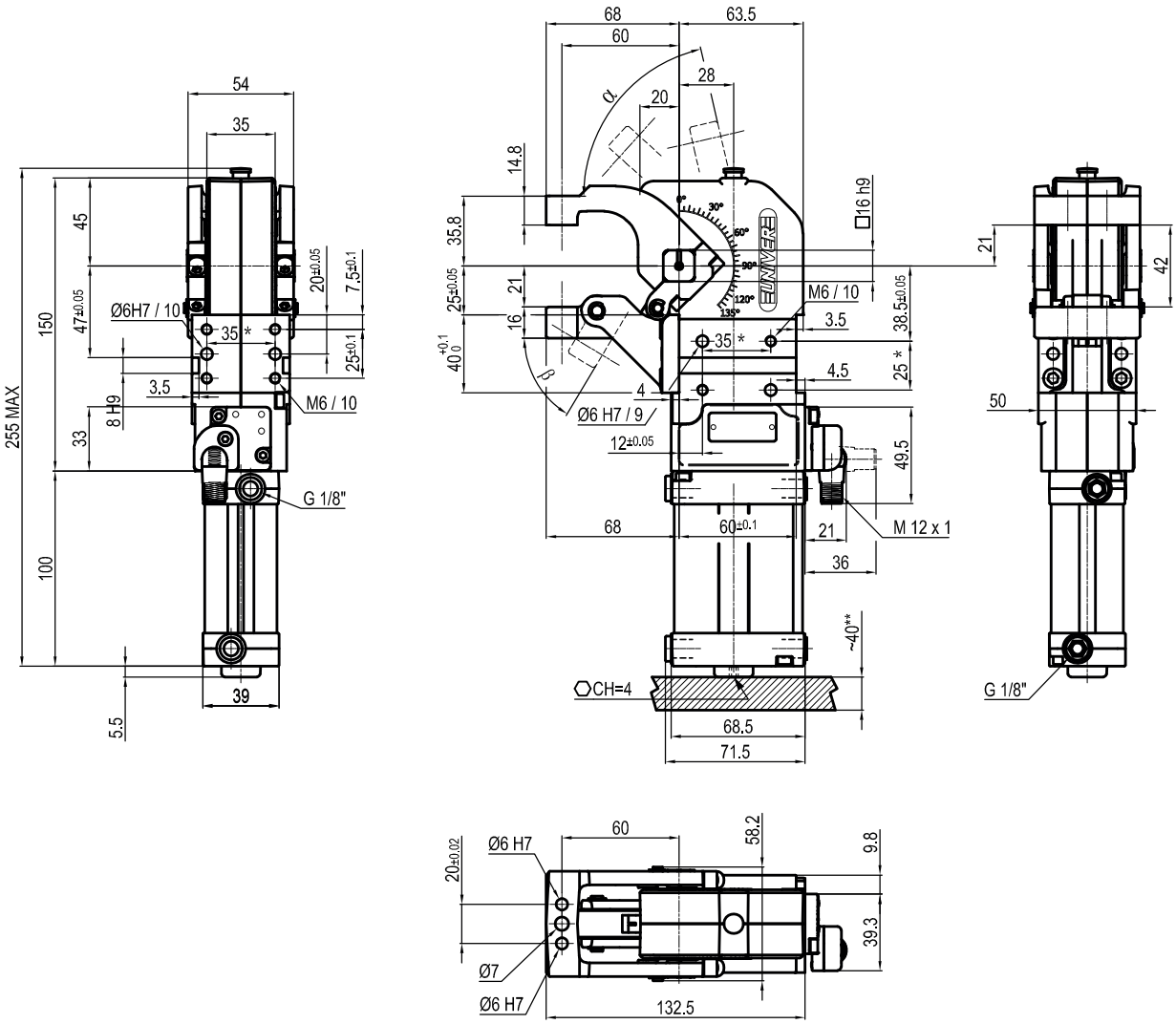

α	β
Max. 77°	Max. 59°

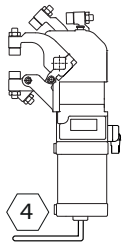

** TOLERANCE BETWEEN DOWELS ± 0,02, BETWEEN SCREW HOLES ± 0,1*
***AREA TO ACCESS ANGLE ADJUSTMENT*

Sensors

Electronic (optical)

DF-K PNP M12
DF-J NPN M12
DF-Y PNP M12 White LED

V/F | Jaw position and Movement

90° - Double movement; One tip

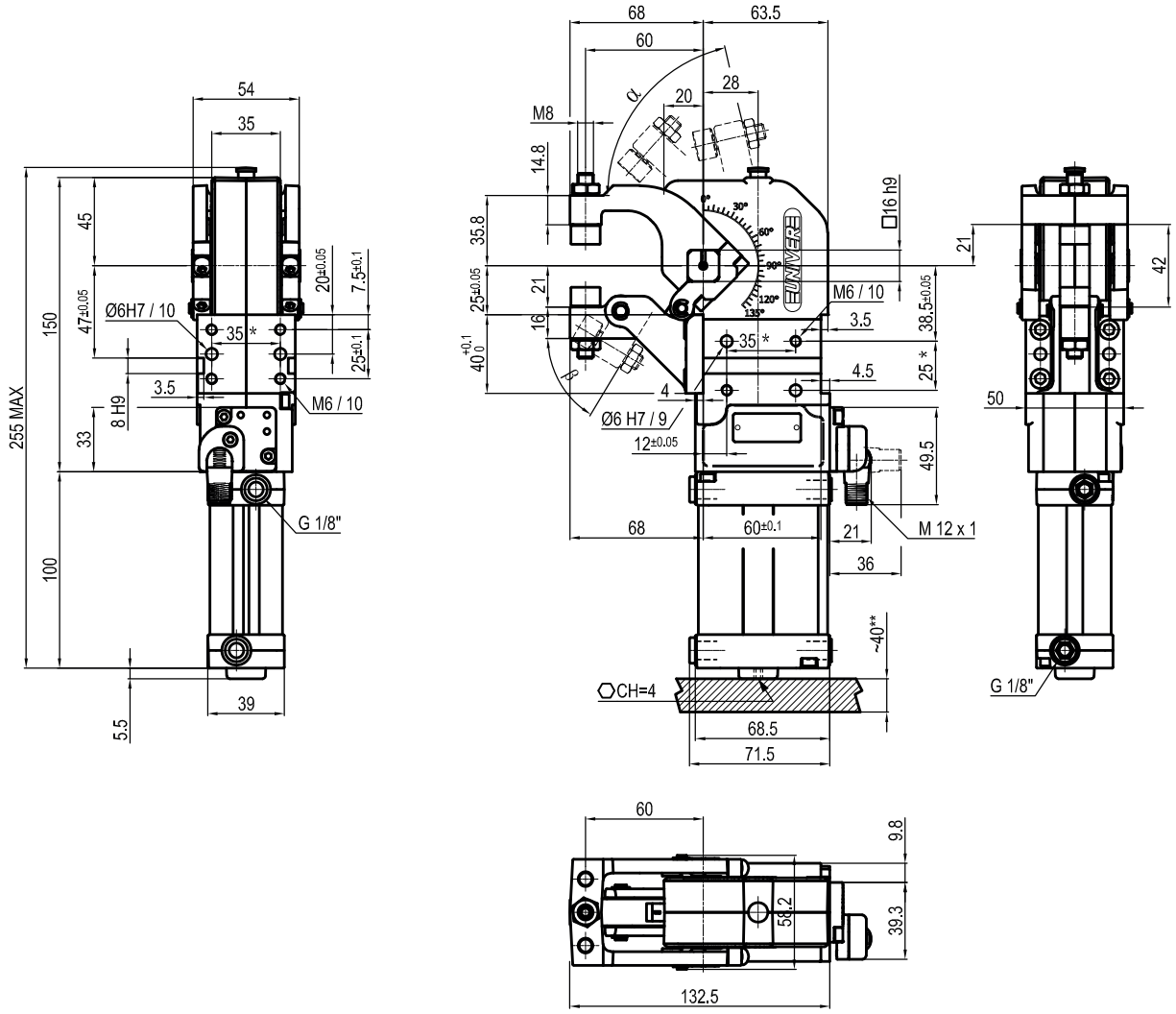

α Max. 77° β Max. 59°

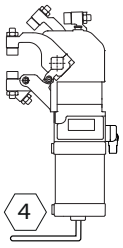

** TOLERANCE BETWEEN DOWELS ± 0,02, BETWEEN SCREW HOLES ± 0,1*
***AREA TO ACCESS ANGLE ADJUSTMENT*

Sensors

Electronic (optical)

DF-K PNP M12
DF-J NPN M12
DF-Y PNP M12 White LED

Tips

Flat
Self adjusting

LKPR1842-11

Knurled

LGPK6940A-L

V/B Jaw position and Movement

90° - Double movement; Two tips

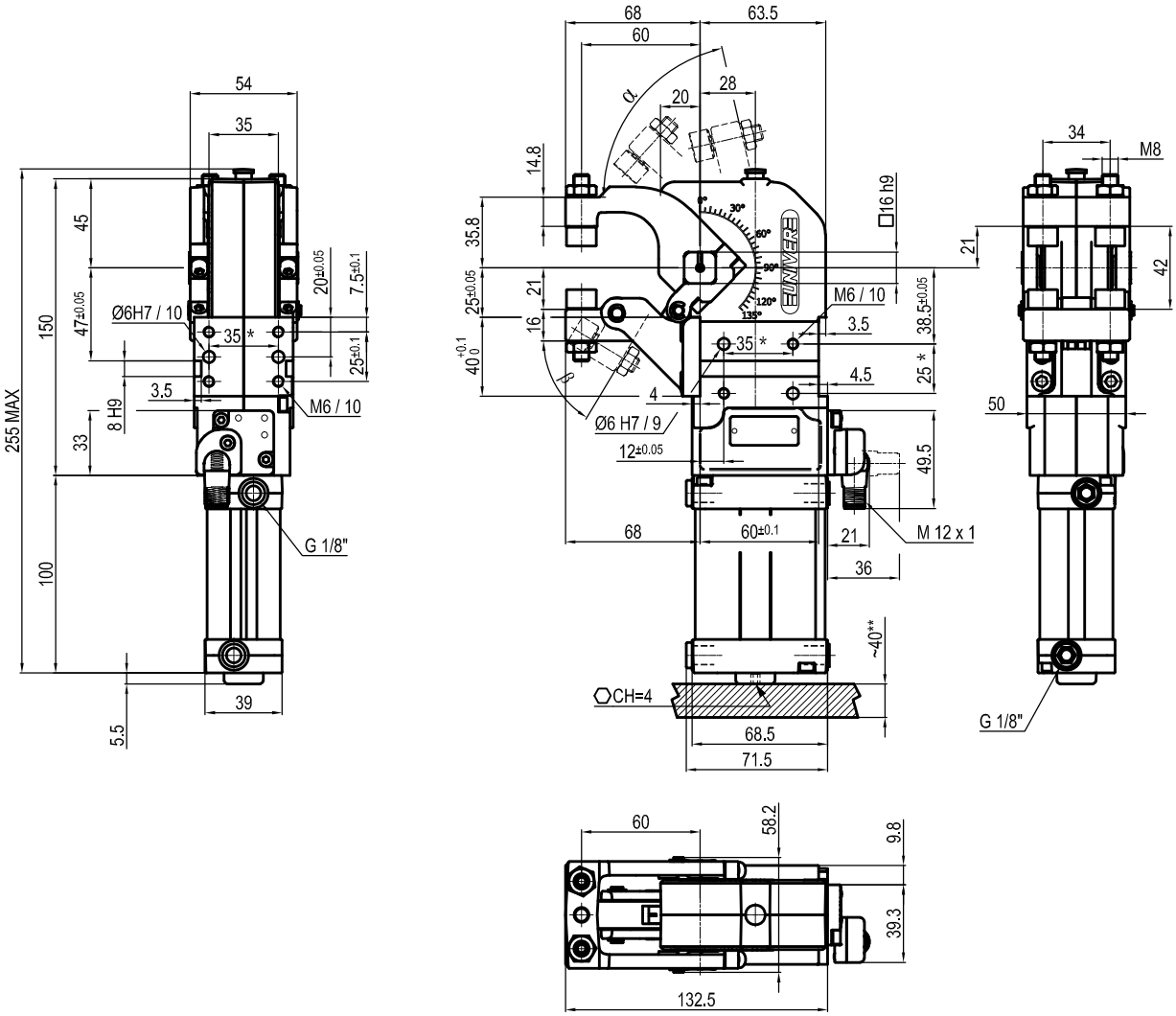

α Max. 77° β Max. 59°

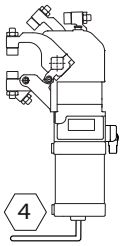

** TOLERANCE BETWEEN DOWELS ± 0,02, BETWEEN SCREW HOLES ± 0,1*
***AREA TO ACCESS ANGLE ADJUSTMENT*

Sensors

Electronic (optical)

DF-K PNP M12
DF-J NPN M12
DF-Y PNP M12 White LED

Tips

Flat
Self adjusting

LKPR1842-11

Knurled

LGPK6940A-L

V/L | Jaw position and Movement

90° - Single movement; Two tips

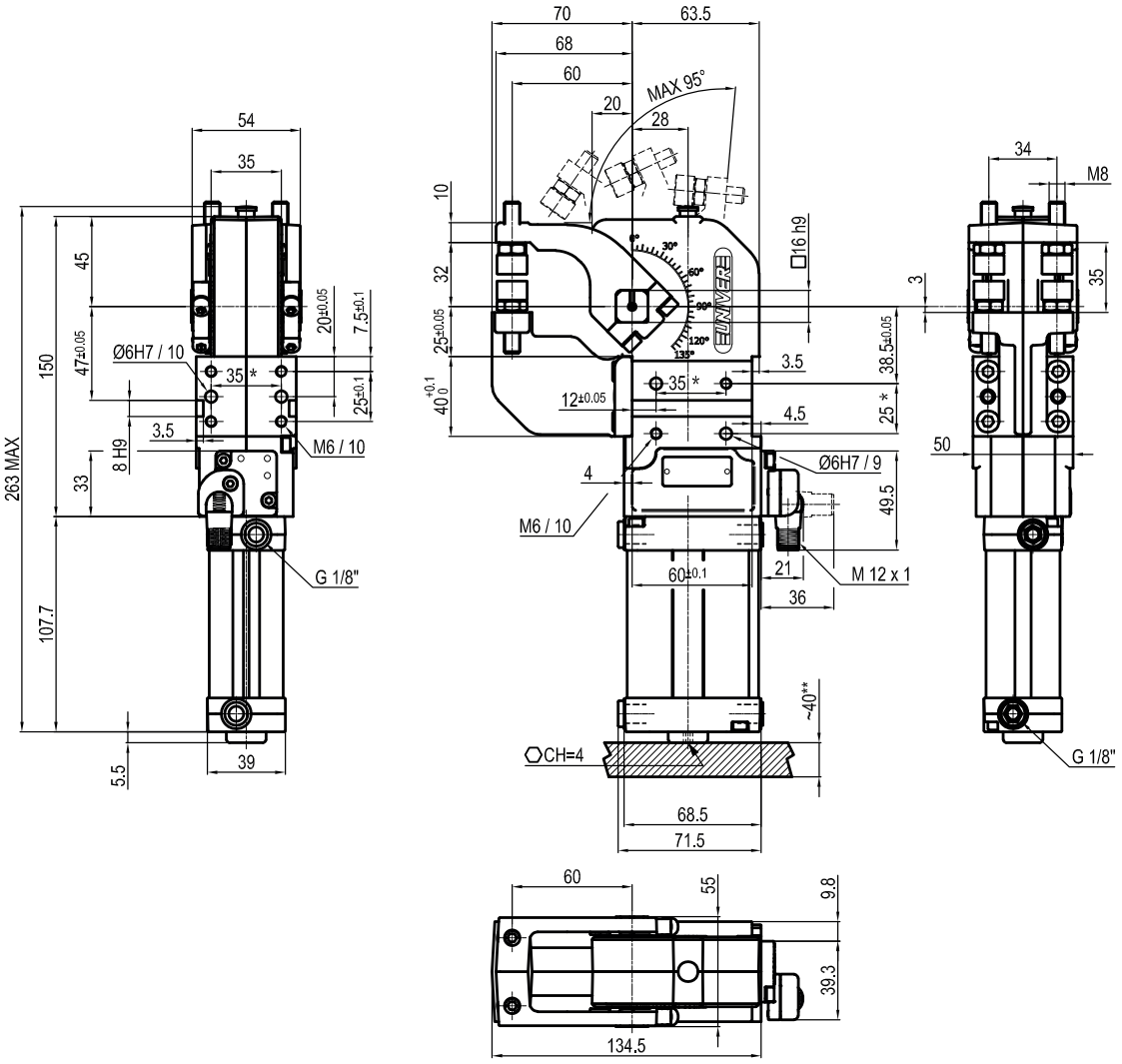

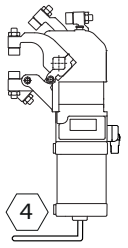

** TOLERANCE BETWEEN DOWELS ± 0,02, BETWEEN SCREW HOLES ± 0,1*
***AREA TO ACCESS ANGLE ADJUSTMENT*

Sensors

Electronic (optical)

DF-K PNP M12
DF-J NPN M12
DF-Y PNP M12 White LED

Tips

Flat
Self adjusting

LKPR1842-11

Knurled

LGPK6940A-L

O/L | Jaw position and Movement

180° - Single movement; Two tips

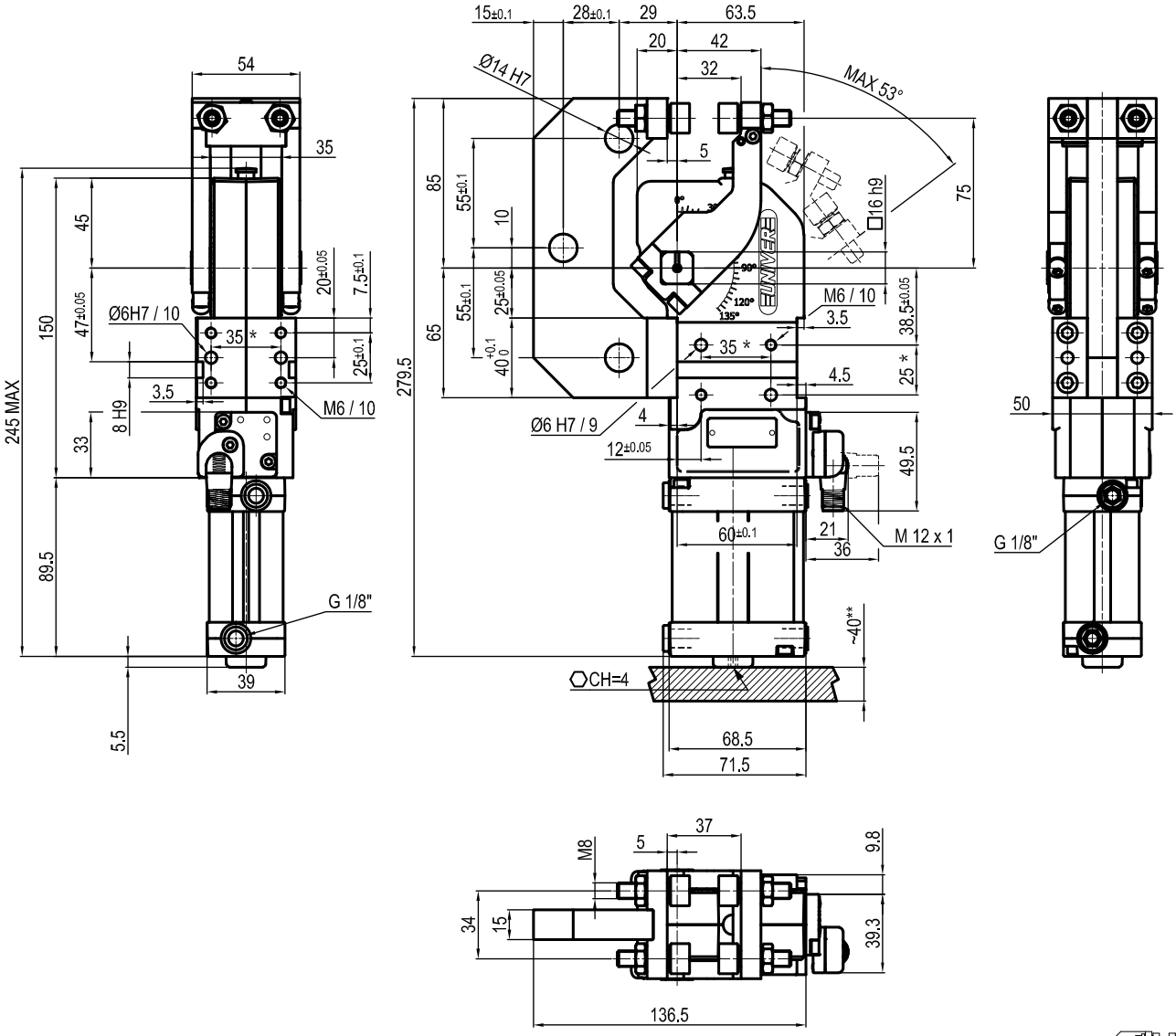

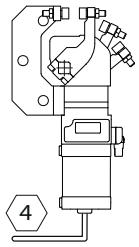

** TOLERANCE BETWEEN DOWELS ± 0,02, BETWEEN SCREW HOLES ± 0,1*
***AREA TO ACCESS ANGLE ADJUSTMENT*

Sensors

Electronic (optical)

DF-K PNP M12
DF-J NPN M12
DF-Y PNP M12 White LED

Tips

Flat
Self adjusting

LKPR1842-11

Knurled

LGPK6940A-L

UGM 40

Pneumatic gripper unit Ø40 mm with hand lever

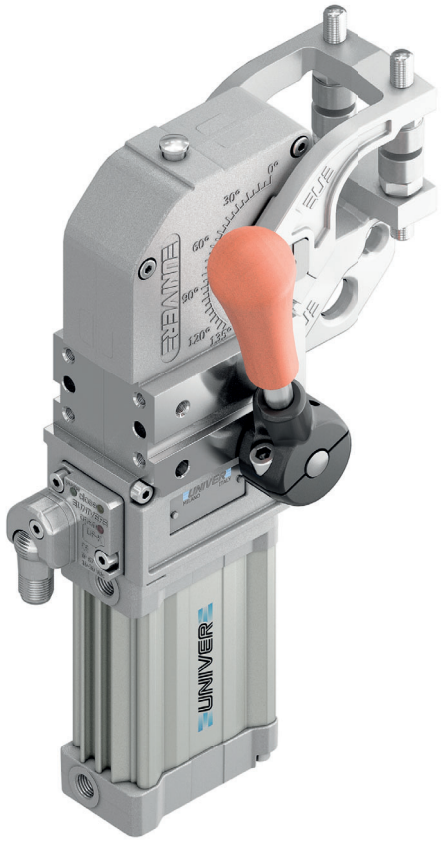

Pneumatic gripper unit Ø40 mm with hand lever typically used on End of Arm Tooling Systems for handling work pieces.

- Stepless adjustable opening angle
- Toggle-joint mechanism
- Integrated compensation
- Double or single movement
- Tips customisation
- Hand lever mounts on both sides
- Fixing pattern on 3 sides

COMPENSATION

IRREVERSIBLE

ANGLE ADJUSTMENT

OPTICAL SENSOR

CHARACTERISTICS

Operating temperature	**5° ÷ 45° C**
Min./Max. Operating pressure	**0,4 / 0,6 MPa**
Opening angle*	**0° ÷ 95°**
Bore Ø	**40 mm**
Holding moment	**600 Nm**
Clamping moment (0,5 Mpa)	**170 N**
Weight (Tips not included)	**2,4 Kg**
Tip weight (each)	**0,3 Kg**
Pneumatic supply ports	**G1/8 on both sides**
Sensor	**electronic (optical)**
Supply voltage	**10 ÷ 30 Vdc**
IP code	**IP 65**

**The opening angle range may vary according to the arm position and style.*

CODIFICATION KEY

UG	M	40	V	B	S	K	0	
1	2	3	4	5	6	7	8	9

1 SERIES
UG = UNICLAMP Gripper units

2 VERSION
M = Pneumatic with hand lever

3 SIZE
40 = Ø 40 mm

4 JAW POSITION

V = 90°

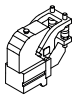

O = 180°

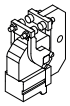

5 MOVEMENT
H = Double movement; no tips*
F = Double movement; 1 pair of flat tips*
B = Double movement; 2 pairs of flat tips*
L = Single movement; 2 pairs of flat tips*
1 = Single movement; 1 pair of knurled tips
2 = Single movement; 2 pairs of knurled tips

**available only for "V" jaw position*

6 JAW MATERIAL
S = Steel jaws

7 SENSOR
N = No sensor (with protection plate)
K = Electronic sensor PNP, M12 (DF-K)
J = Electronic sensor NPN, optical (DF-J)
Y = Electronic sensor PNP, M12 (DF-Y) white LED

8 PRODUCT REVISION
Assigned by UNIVER

9 ATEX
X = ATEX option
See ATEX Catalogue for types and versions

V/H | Jaw position and Movement

90° - Double movement; No tips

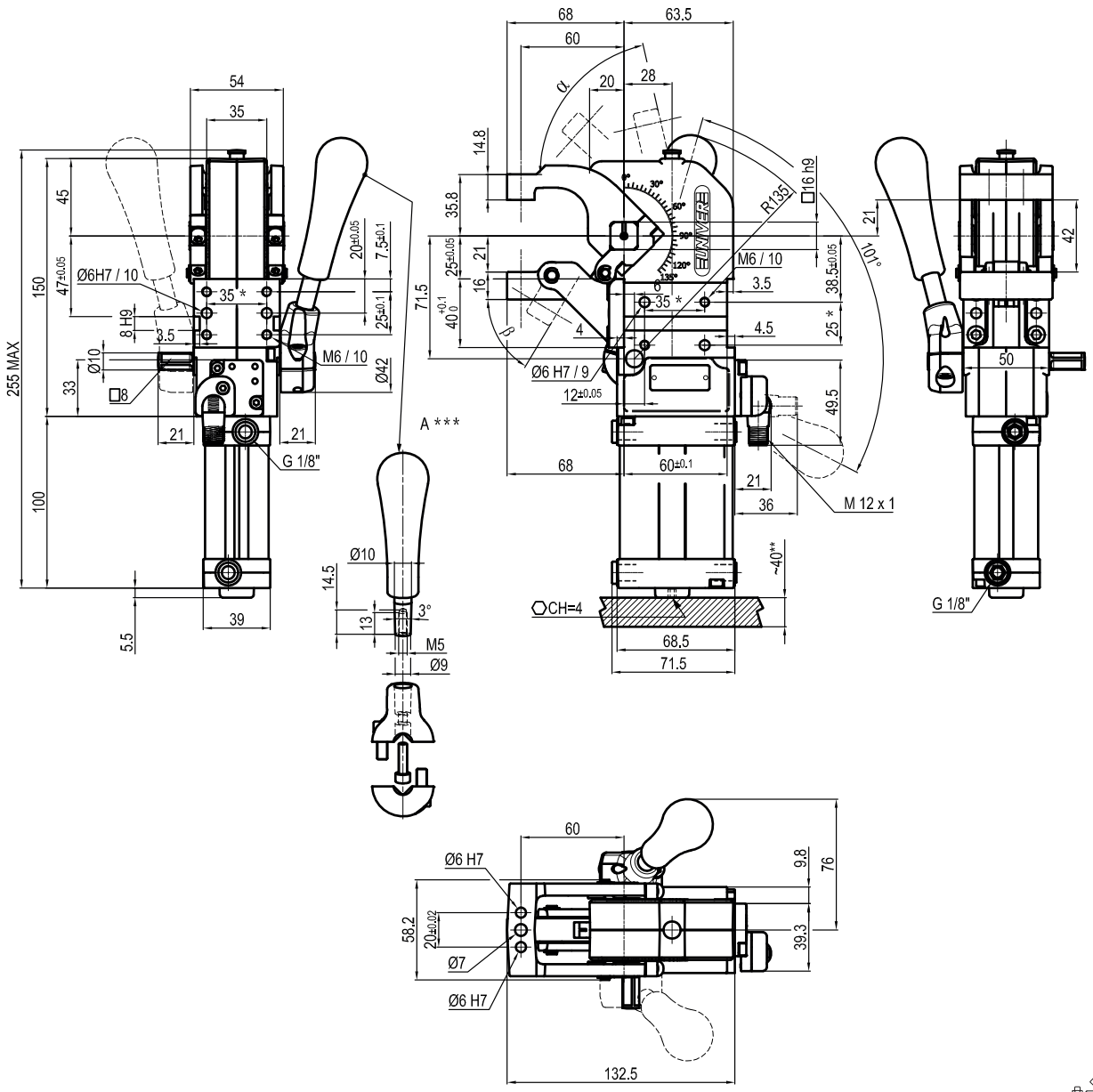

α	β
Max. 77°	Max. 59°

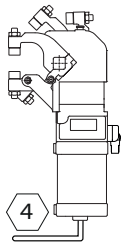

** TOLERANCE BETWEEN DOWELS ± 0,02, BETWEEN SCREW HOLES ± 0,1*
***AREA TO ACCESS ANGLE ADJUSTMENT*
****DIMENSIONS TO BE RESPECTED IN CASE OTHER MANUAL LEVERS ARE USED*

Sensors

Electronic (optical)

DF-K PNP M12
DF-J NPN M12
DF-Y PNP M12 White LED

Accessories

Handlever

UBF2540

V/F Jaw position and Movement

90° - Double movement; One tip

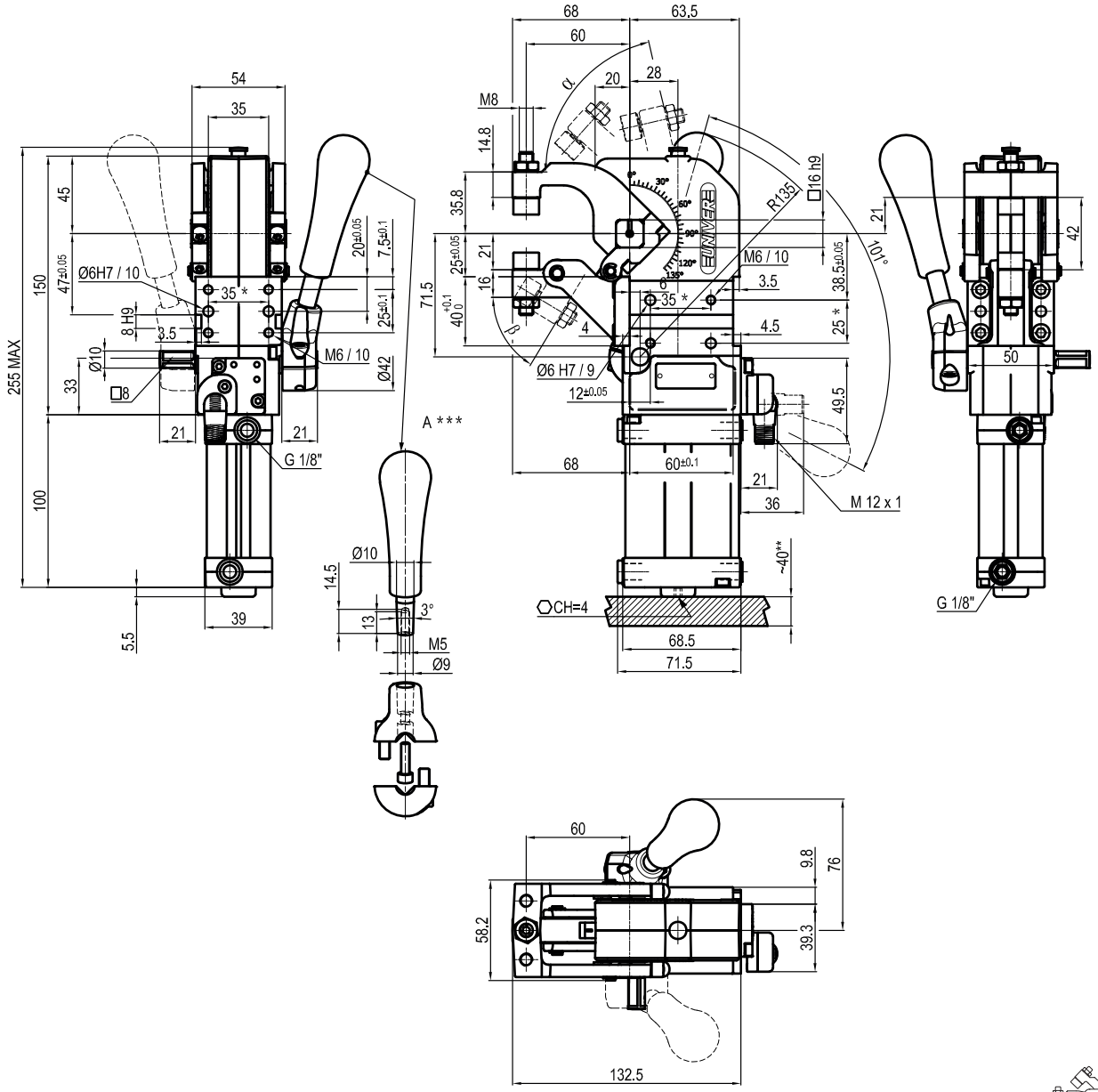

α Max. 77° β Max. 59°

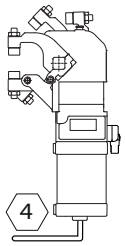

** TOLERANCE BETWEEN DOWELS ± 0,02, BETWEEN SCREW HOLES ± 0,1*
***AREA TO ACCESS ANGLE ADJUSTMENT*
****DIMENSIONS TO BE RESPECTED IN CASE OTHER MANUAL LEVERS ARE USED*

Sensors

Electronic (optical)

DF-K PNP M12
DF-J NPN M12
DF-Y PNP M12 White LED

Tips

Flat
Self adjusting

LKPR1842-11

Knurled

LGPK6940A-L

Accessories

Handlever

UBF2540

V/B Jaw position and Movement

90° - Double movement; Two tips

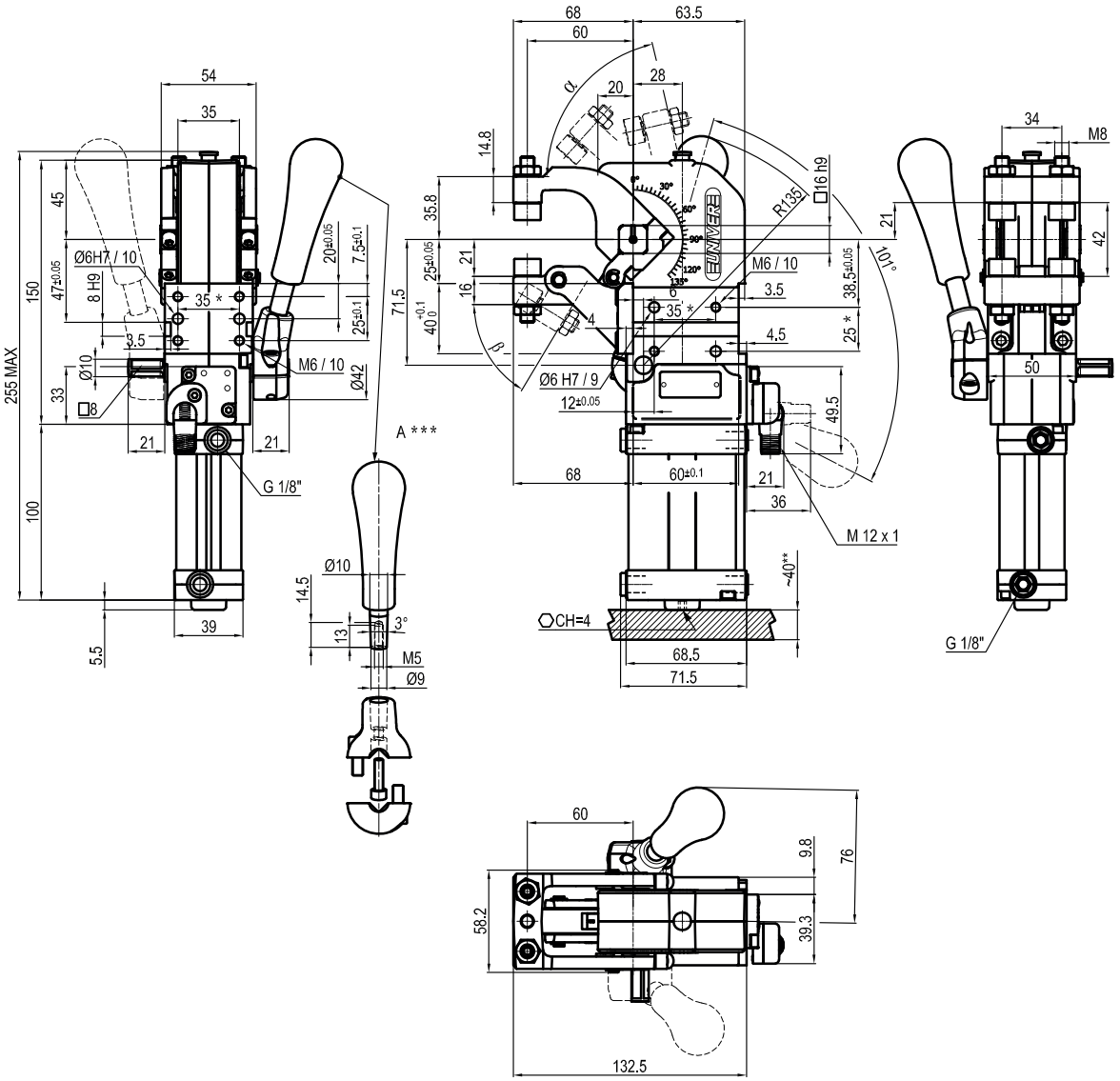

α	β
Max. 77°	Max. 59°

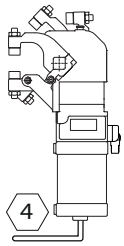

** TOLERANCE BETWEEN DOWELS ± 0,02, BETWEEN SCREW HOLES ± 0,1*
***AREA TO ACCESS ANGLE ADJUSTMENT*
****DIMENSIONS TO BE RESPECTED IN CASE OTHER MANUAL LEVERS ARE USED*

Sensors

Electronic (optical)

DF-K PNP M12
DF-J NPN M12
DF-Y PNP M12 White LED

Tips

Flat
Self adjusting

LKPR1842-11

Knurled

LGPK6940A-L

Accessories

Handlever

UBF2540

V/L | Jaw position and Movement

90° - Single movement; Two tips

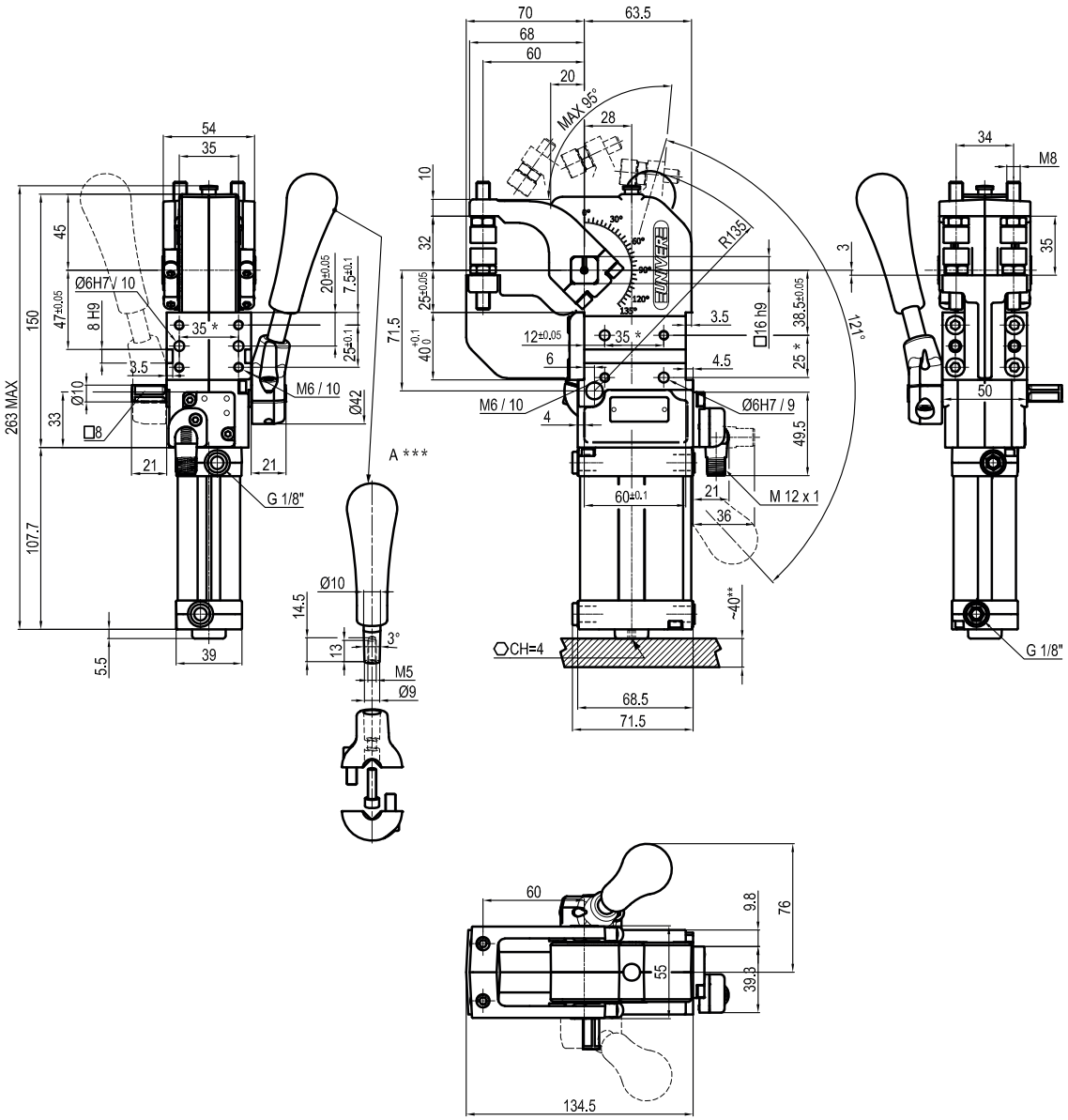

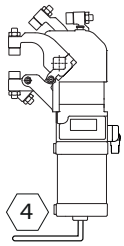

** TOLERANCE BETWEEN DOWELS ± 0,02, BETWEEN SCREW HOLES ± 0,1*
***AREA TO ACCESS ANGLE ADJUSTMENT*
****DIMENSIONS TO BE RESPECTED IN CASE OTHER MANUAL LEVERS ARE USED*

Sensors

Electronic (optical)

DF-K PNP M12
DF-J NPN M12
DF-Y PNP M12 White LED

Tips

Flat
Self adjusting

LKPR1842-11

Knurled

LGPK6940A-L

Accessories

Handlever

UBF2540

O/L | Jaw position and Movement

180° - Single movement; Two tips

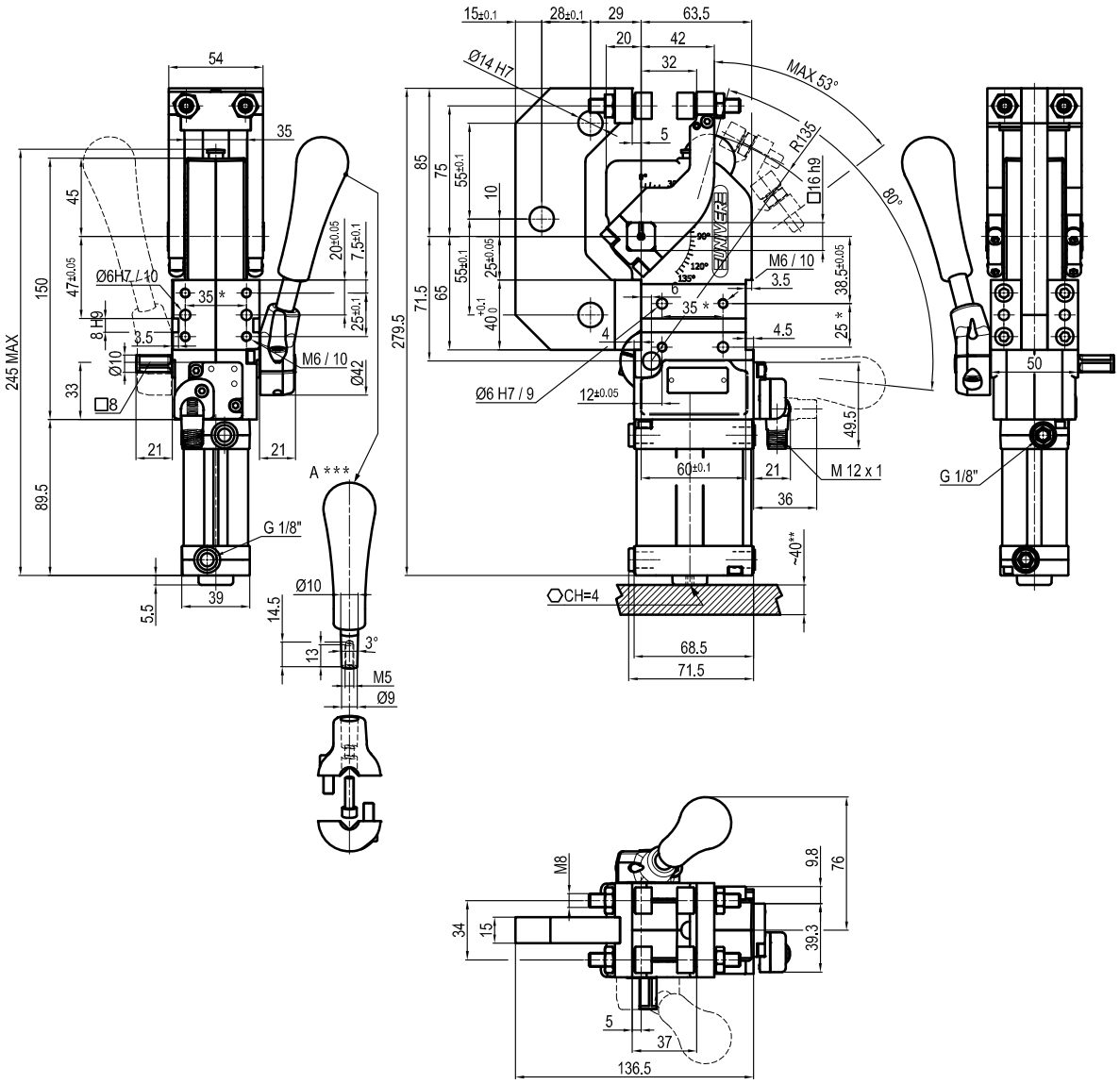

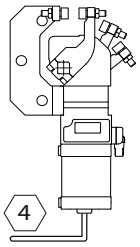

** TOLERANCE BETWEEN DOWELS ± 0,02, BETWEEN SCREW HOLES ± 0,1*
***AREA TO ACCESS ANGLE ADJUSTMENT*
****DIMENSIONS TO BE RESPECTED IN CASE OTHER MANUAL LEVERS ARE USED*

Sensors

Electronic (optical)

DF-K PNP M12
DF-J NPN M12
DF-Y PNP M12 White LED

Tips

Flat
Self adjusting

LKPR1842-11

Knurled

LGPK6940A-L

Accessories

Handlever

UBF2540

UGPS 32

Pneumatic gripper unit Ø32 mm

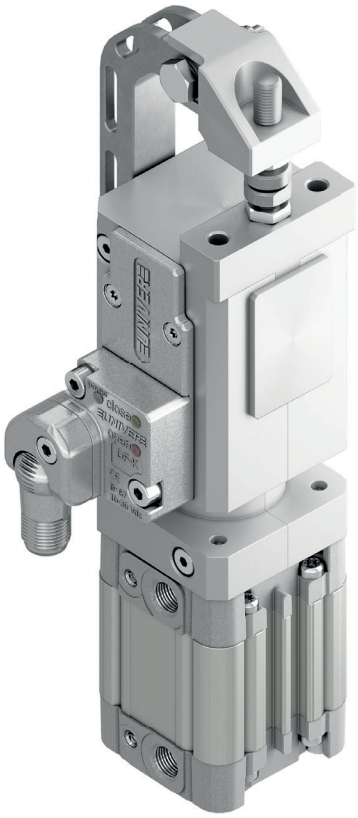

Pneumatic gripper unit Ø32 mm with single or double arms, typically used on End of Arm Tooling systems for handling work pieces.

- Compensation 1 mm (single) and 1,5 mm (double)
- Stepless adjustable opening angle
- Toggle-joint mechanism
- Two sided sensor mounting position
- Integrated pneumatic cushioning system
- 360° orbital orientation thanks to many different mounting elements
- Tips customisation

CHARACTERISTICS

Operating temperature	**5° ÷ 45° C**
Min./Max. Operating pressure	**0,4 / 0,6 MPa**
Opening angle	**10° ÷ 50°**
Bore Ø	**32 mm**
Holding moment	**150 Nm**
Clamping moment (0,5 MPa)	**600 N**
Weight (without tips)	**1 Kg**
Pneumatic supply ports	**G1/8**
Sensor	**electronic (optical)**
Supply voltage	**10 ÷ 30 Vdc**
IP code	**IP 65**

COMPENSATION

LIGHTWEIGHT

IRREVERSIBLE

ANGLE ADJUSTMENT

OPTICAL SENSOR

CODIFICATION KEY

UGP	S	32	D1	A	K	R	3	0		
1	2	3	4	5	6	7	8	9	10	

1 SERIES
UGP = UNICLAMP Gripper units

2 ARM MATERIAL
S = Steel

3 SIZE
32 = Ø 32 mm

4 ARM
S0 = Single arm, without jaws
S1 = Single arm, jaws set for 1 pair of tips
S2 = Single arm, jaws set for 2 pairs of tips
D0 = Double arms, without jaws
D1 = Double arms, jaws set for 1 pair of tips
D2 = Double arms, jaws set for 2 pair of tips

5 TIPS
0 = No tips
A = Knurled tips
B = Self-adjusting knurled tips
C = Flat tips
D = Concave/Convex tips (1+1)
E = Self adjusting flat tips

6 SENSOR
N = No sensor (with protection plate)
K = Electronic sensor PNP, M12 (DF-K)
J = Electronic sensor NPN, optical (DF-J)
Y = Electronic sensor PNP, M12 (DF-Y) white LED

7 SENSOR MOUNTING
N = No sensor
R = Right (ports side)
L = Left

8 MOUNTS
0 = No mount
1 = Middle flange mount (LGP32MP)
2 = 360° orbital mount, ball Ø25 (LGP32MO25)
3 = 360° orbital mount, ball Ø30 (LGP32MO30)
6 = Rear flange mount (LGP32PT070)

9 PRODUCT REVISION
Assigned by UNIVER

10 ATEX
X = ATEX option
See ATEX Catalogue for types and versions

S | Single arm

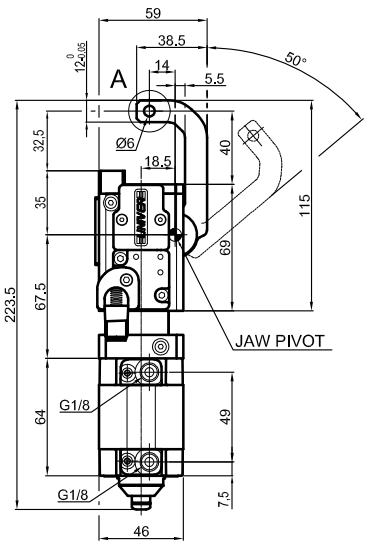

UGPS32S00K_0

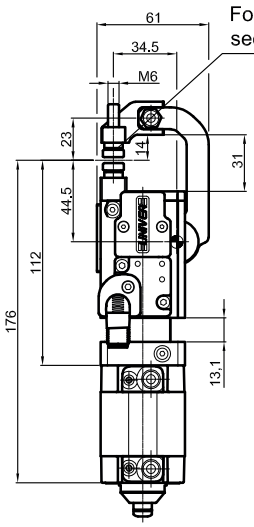

UGPS32S1_K_0

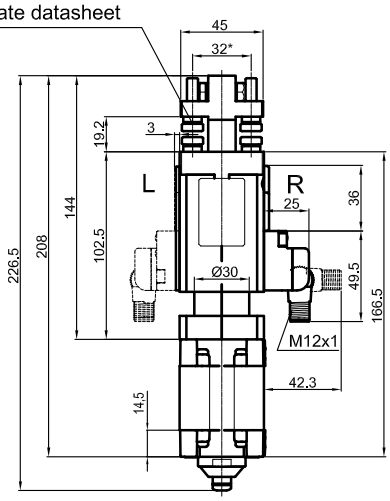

UGPS32S2_K_0

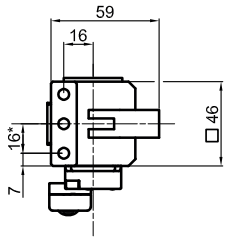

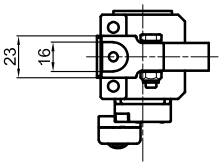

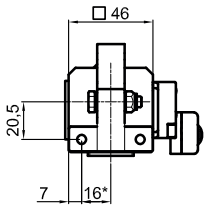

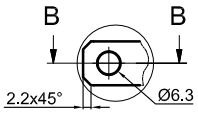

A (2 : 1)

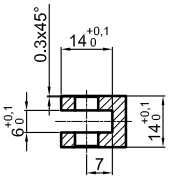

B-B (2 : 1)

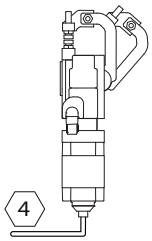

** TOLERANCE BETWEEN DOWELS ± 0,02, BETWEEN SCREW HOLES ± 0,1*

Sensors

Electronic (optical)

DF-K PNP M12
DF-J NPN M12
DF-Y PNP M12 White LED

Tips

A

Knurled

LGPK6932A-L
LGPK6932A-C

B

Knurled
Self adjusting

LGPK6932B-L
LGPK6932B-C

C

Flat

LGPK6932C-L
LGPK6932C-C

D

Concave/Convex

LGPK6932D-C

E

Flat
Self adjusting

LGPK6932E-L
LGPK6932E-C

D | Double arm

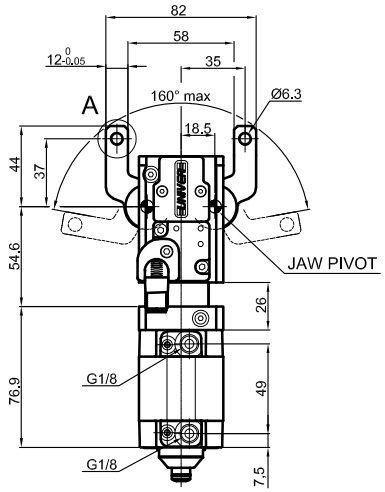

UGPS32D00K_0

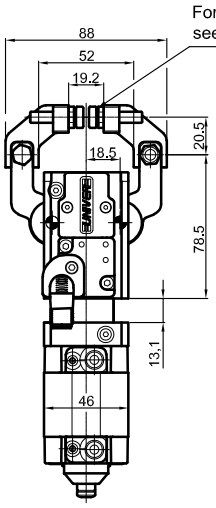

UGPS32D1_K_0

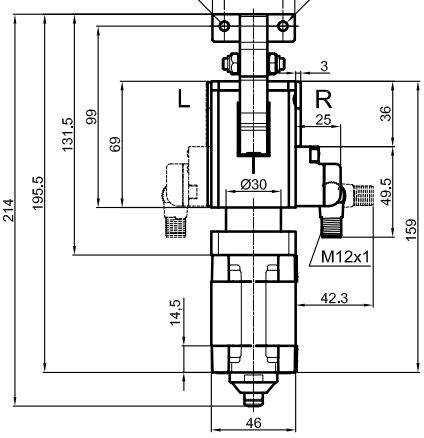

UGPS32D2_K_0

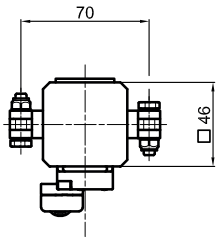

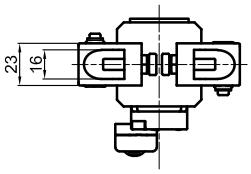

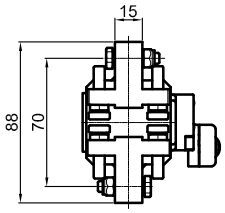

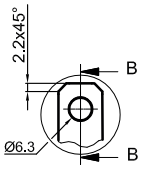

A (1 : 1)

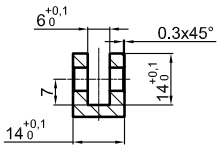

B-B (1 : 1)

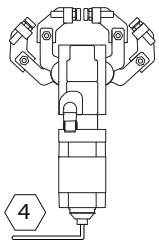

** TOLERANCE BETWEEN DOWELS ± 0,02, BETWEEN SCREW HOLES ± 0,1*

Sensors

Electronic (optical)

DF-K PNP M12
DF-J NPN M12
DF-Y PNP M12 White LED

Tips

A

Knurled

LGPK6932A-L

B

Knurled
Self adjusting

LGPK6932B-L

C

Flat

LGPK6932C-L

D

Concave/Convex

LGPK6932D-L

E

Flat
Self adjusting

LGPK6932E-L

1 Middle flange mount
LGP32MP

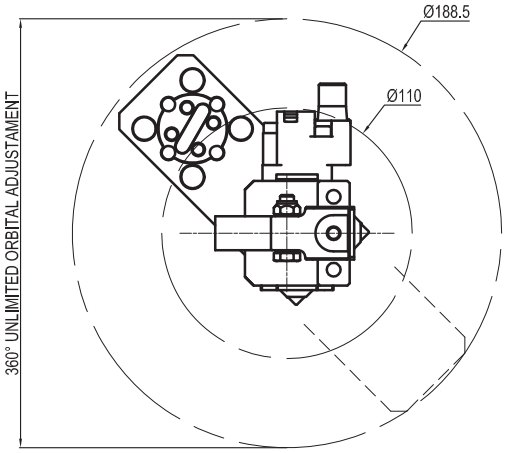

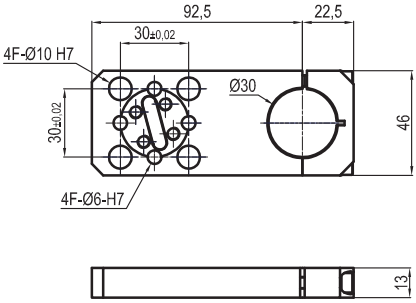

2 360° Orbital mount
Ball Ø25 - **LGP32MO25**

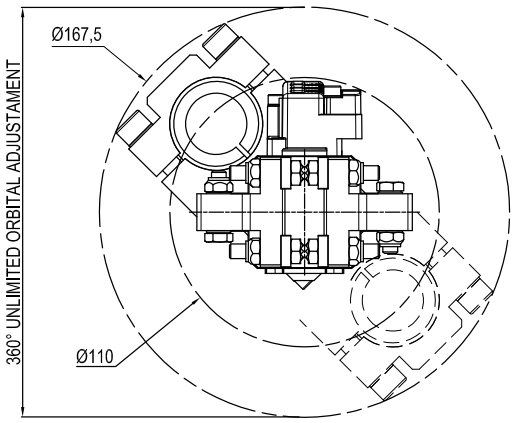

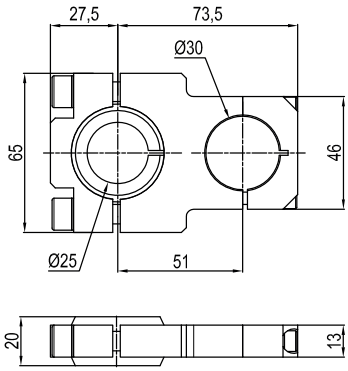

3 360° Orbital mount

Ball Ø30 - **LGP32MO30**

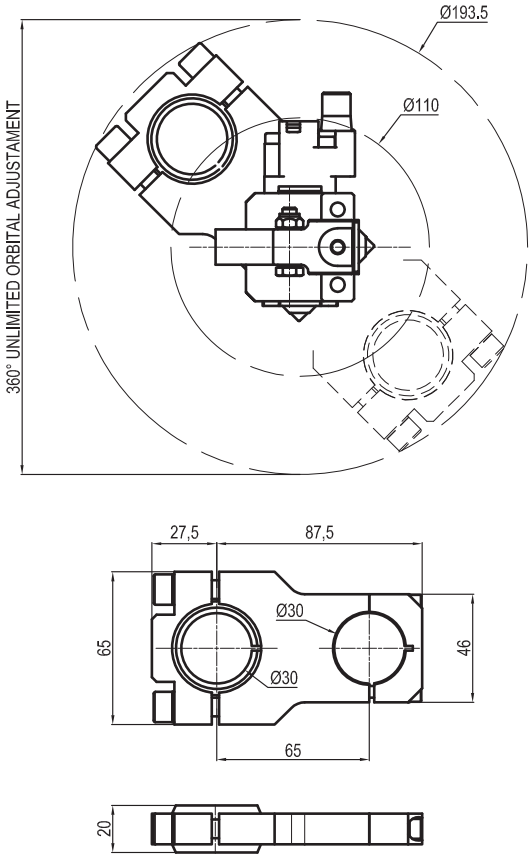

6 Rear flange mount

LGP32PT070

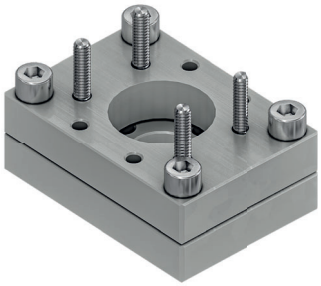

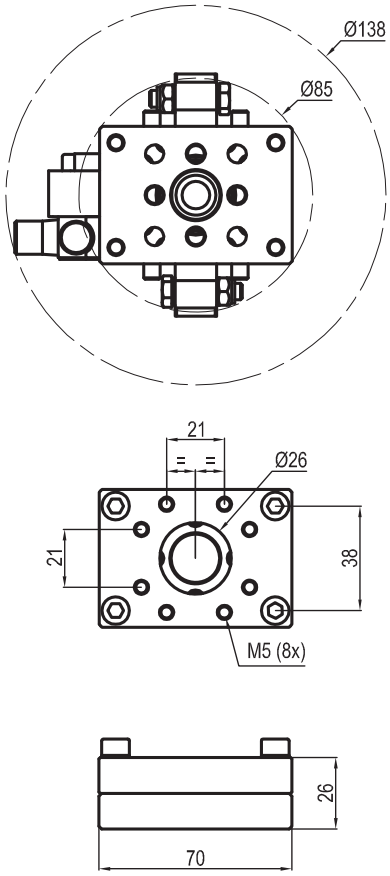

A Knurled

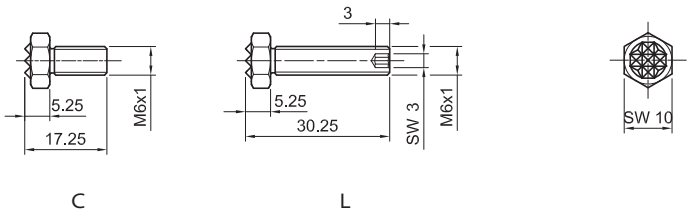

Tips	Weight
LGPK6932A-L	10g
LGPK6932A-C	7g

B Knurled
Self adjusting

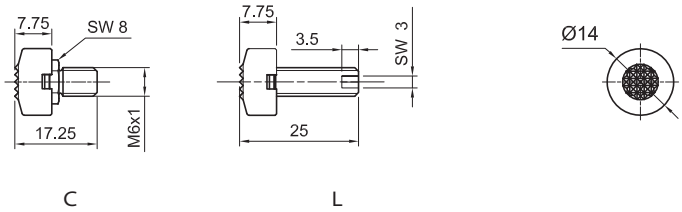

Tips	Weight
LGPK6932B-L	9,5g
LGPK6932B-C	12g

C Flat

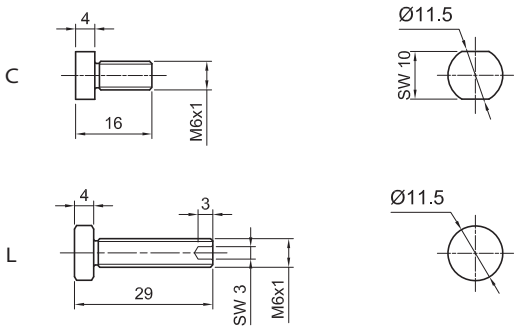

Tips	Weight
LGPK6932A-L	10g
LGPK6932A-C	7g

D Concave/Convex

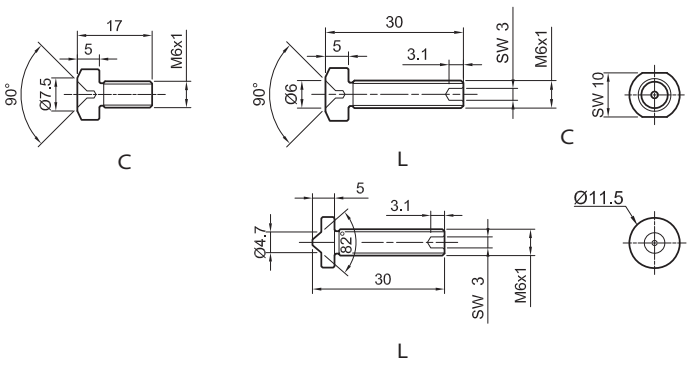

Concave

Tips	Weight
LGPK6932D-L	10g
LGPK6932D-C	8g

Convex

Tips	Weight
LGPK6932D-L	11g

E Flat
Self adjusting

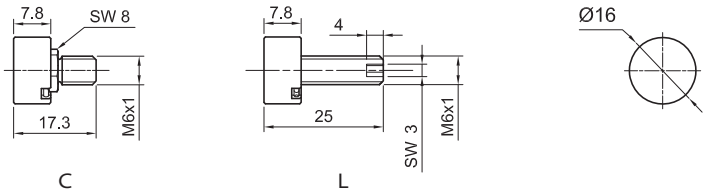

Tips	Weight
LGPK6932E-L	13g
LGPK6932E-C	10g

UGPS 40

Pneumatic gripper unit Ø40 mm

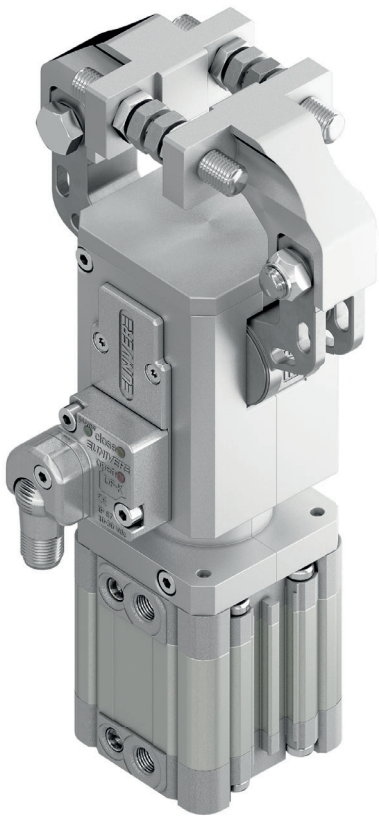

Pneumatic gripper unit Ø40 mm with single or double arms, typically used on End of Arm Tooling systems for handling work pieces.

- Compensation 1,5 mm (single) and 2,2 (double)
- Stepless adjustable opening angle
- Toggle-joint mechanism
- Two sided sensor mounting position
- Integrated pneumatic cushioning system
- 360° orbital orientation thanks to many different mounting elements
- Tips customisation

CHARACTERISTICS

Operating temperature	**5° ÷ 45° C**
Min./Max. Operating pressure	**0,4 / 0,6 MPa**
Opening angle	**10° ÷ 50°**
Bore Ø	**40 mm**
Holding moment	**800 N**
Clamping moment (0,5 MPa)	**1600 N**
Weight (without tips)	**1,75 Kg**
Pneumatic supply ports	**G1/8**
Sensor	**electronic (optical)**
Supply voltage	**10 ÷ 30 Vdc**
IP code	**IP 65**

COMPENSATION

LIGHTWEIGHT

IRREVERSIBLE

ANGLE ADJUSTMENT

OPTICAL SENSOR

CODIFICATION KEY

UGP	S	40	D1	A	K	R	3	0	
1	2	3	4	5	6	7	8	9	10

1 SERIES
UGP = UNICLAMP Gripper units

2 ARM MATERIAL
S = Steel

3 SIZE
40 = Ø 40 mm

4 ARM
S0 = Single arm, without jaws
S1 = Single arm, jaws set for 1 pair of tips
S2 = Single arm, jaws set for 2 pairs of tips
D0 = Double arms, without jaws
D1 = Double arms, jaws set for 1 pair of tips
D2 = Double arms, jaws set for 2 pair of tips

5 TIPS
0 = No tips
A = Knurled tips
B = Self-adjusting knurled tips
C = Flat tips
D = Concave/Convex tips (1+1)
E = Self adjusting flat tips

6 SENSOR
N = No sensor (with protection plate)
K = Electronic sensor PNP, M12 (DF-K)
J = Electronic sensor NPN, optical (DF-J)
Y = Electronic sensor PNP, M12 (DF-Y) white LED

7 SENSOR MOUNTING
N = No sensor
R = Right (ports side)
L = Left

8 MOUNTS
0 = No mount
1 = Middle flange mount (LGP40MP)
2 = 360° orbital mount, ball Ø25 (LGP40MO25)
3 = 360° orbital mount, ball Ø30 (LGP40MO30)
4 = 360° orbital mount, ball Ø40 (LGP40MO40)
5 = 360° orbital mount, ball Ø45 (LGP40MO45)
6 = Rear flange mount (LGP40PT080)
7 = Rear flange mount (LGP40PT110)

9 PRODUCT REVISION
Assigned by UNIVER

10 ATEX
X = ATEX option
See ATEX Catalogue for types and versions

S | Single arm

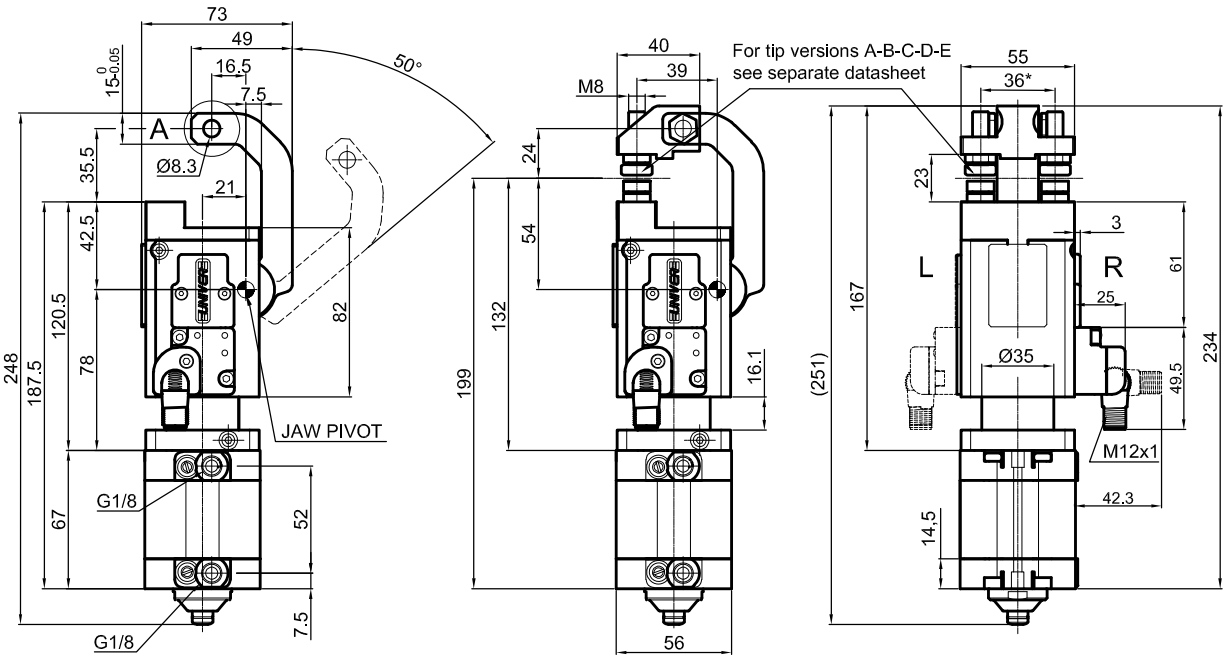

UGPS40S00K_0 UGPS40S1_K_0 UGPS40S2_K_0

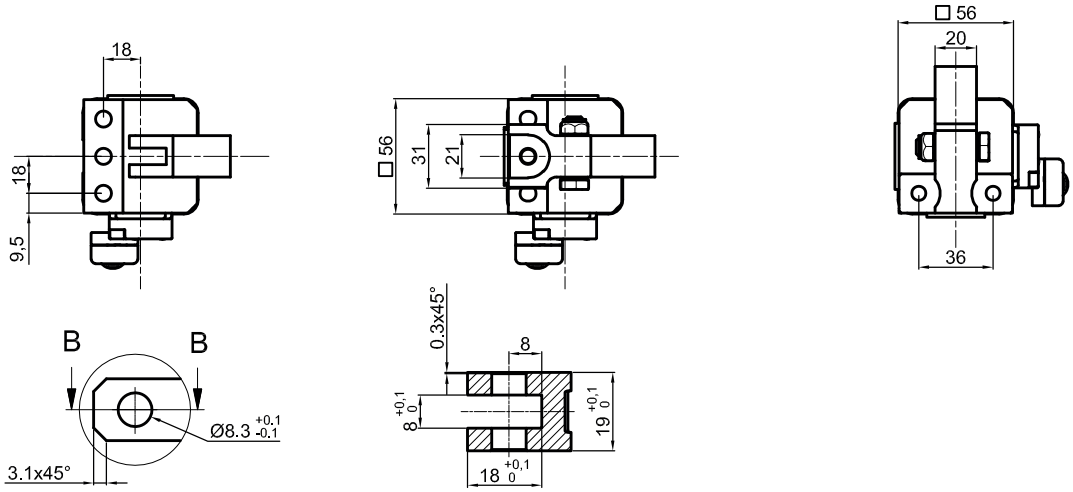

A (2 : 1) B-B (2 : 1)

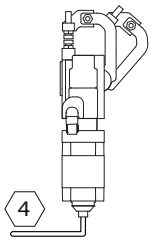

** TOLERANCE BETWEEN DOWELS ± 0,02, BETWEEN SCREW HOLES ± 0,1*

Sensors

Electronic (optical)

DF-K PNP M12
DF-J NPN M12
DF-Y PNP M12 White LED

Tips

A

Knurled

LGPK6940A-L
LGPK6940A-C

B

Knurled
Self adjusting

LGPK6940B-L
LGPK6940B-C

C

Flat

LGPK6940C-L
LGPK6940C-C

D

Concave/Convex

LGPK6940D-C

E

Flat
Self adjusting

LGPK6940E-L
LGPK6940E-C

D | Double arm

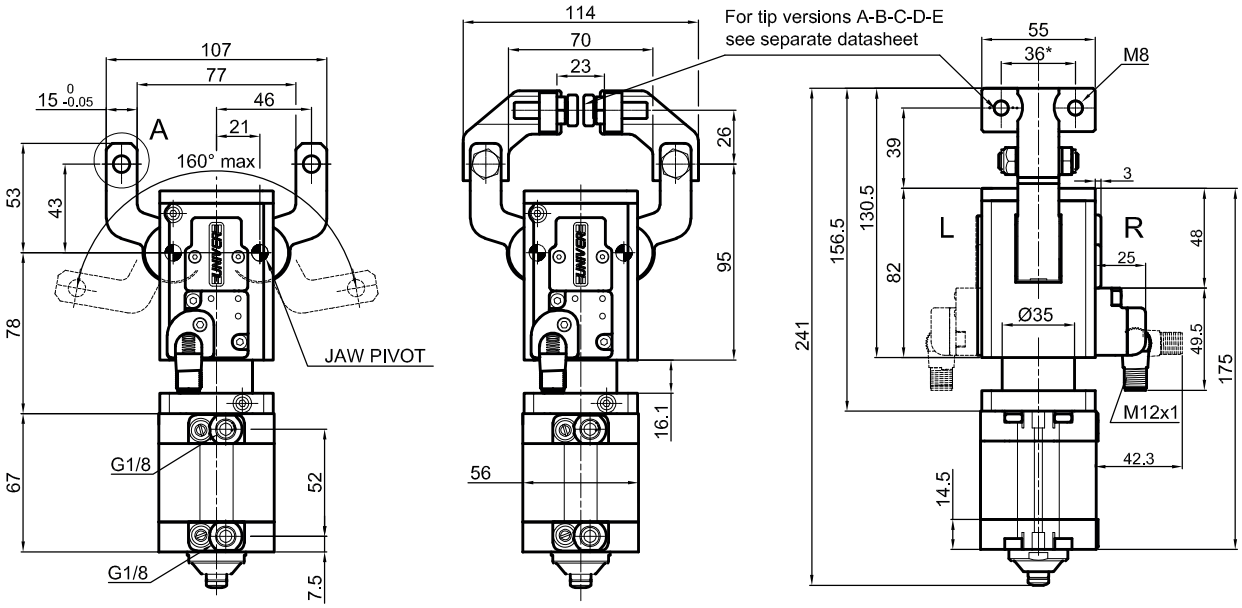

UGPS40D00K_0 UGPS40D1_K_0 UGPS40D2_K_0

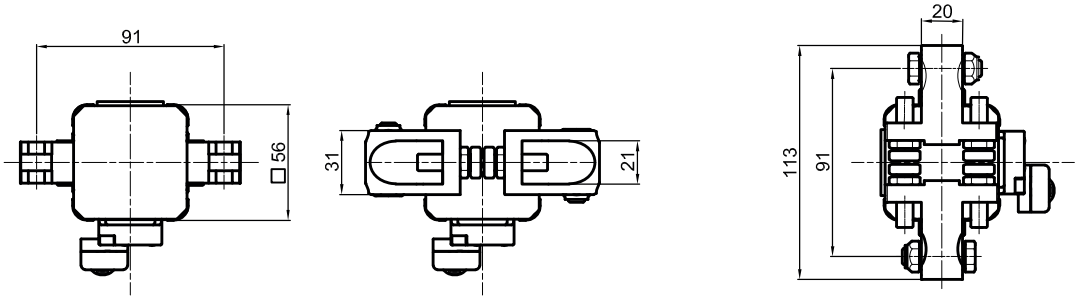

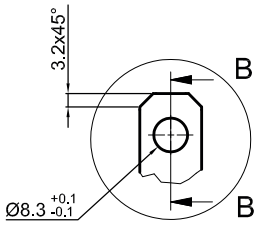

A (2 : 1)

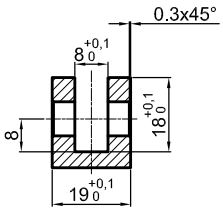

B-B (2 : 1)

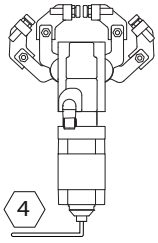

** TOLERANCE BETWEEN DOWELS ± 0,02, BETWEEN SCREW HOLES ± 0,1*

Sensors

Electronic (optical)

DF-K PNP M12
DF-J NPN M12
DF-Y PNP M12 White LED

Tips

A

Knurled

LGPK6940A-L

B

Knurled
Self adjusting

LGPK6940B-L

C

Flat

LGPK6940C-L

D

Concave/Convex

LGPK6940D-L

E

Flat
Self adjusting

LGPK6940E-L

1 Middle flange mount
LGP40MP

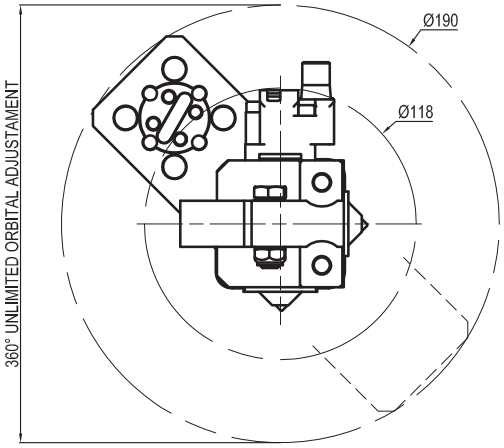

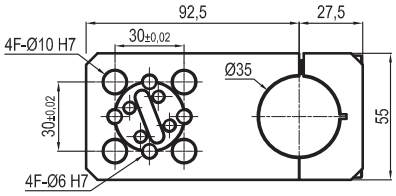

2 360° Orbital mount
Ball Ø25 - **LGP40MO25**

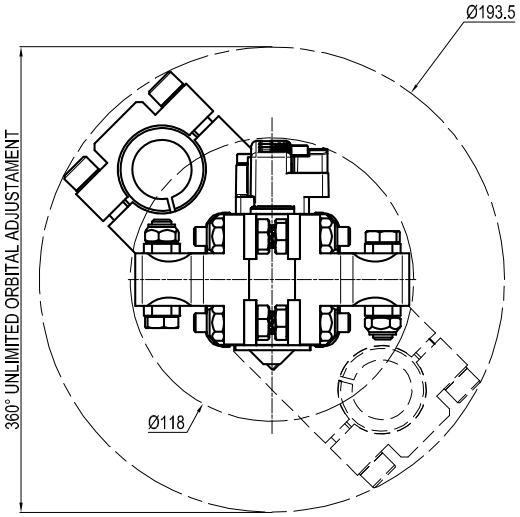

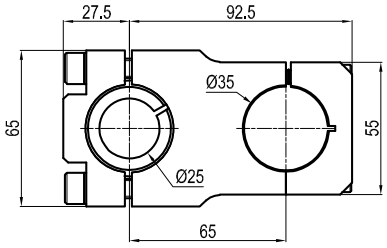

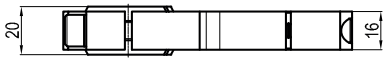

3 360° Orbital mount

Ball Ø30 - **LGP40MO30**

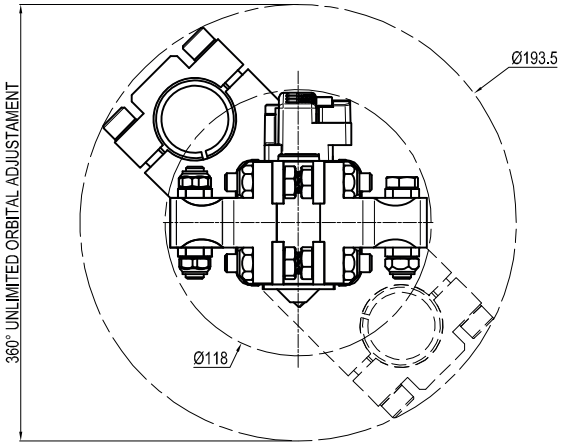

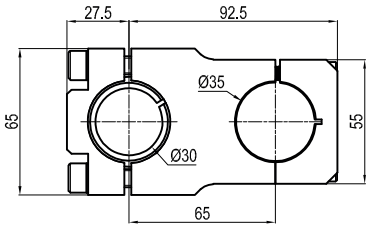

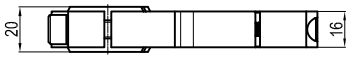

4 360° Orbital mount

Ball Ø40 - **LGP40MO40**

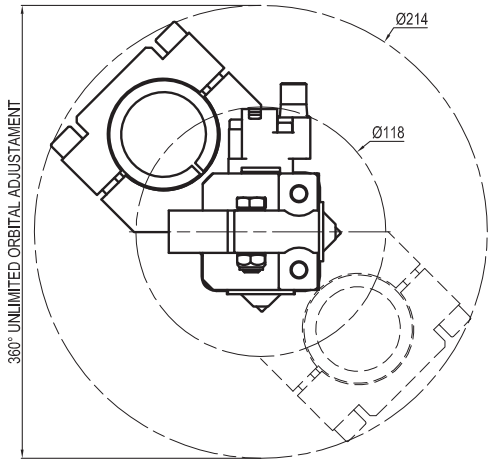

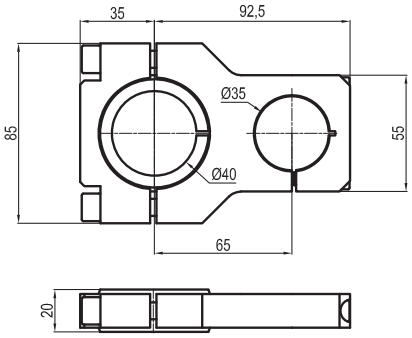

5 360° Orbital mount

Ball Ø45 - **LGP40MO45**

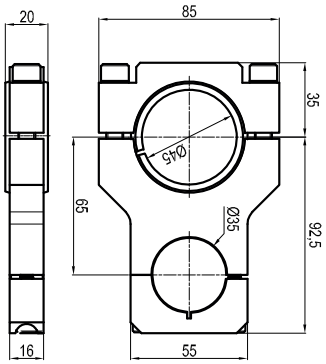

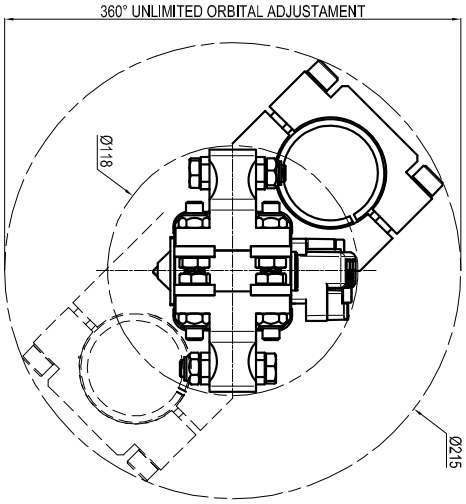

6 Rear flange mount

LGP40PT080

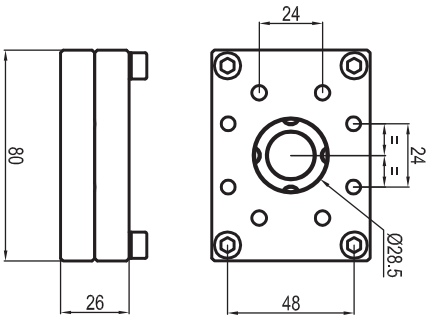

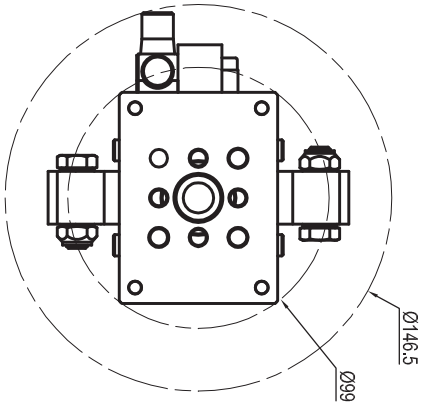

7 Rear flange mount

LGP40PT110

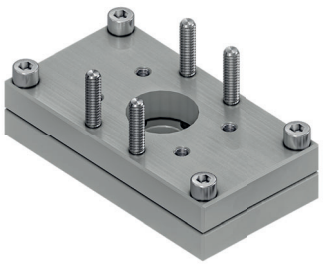

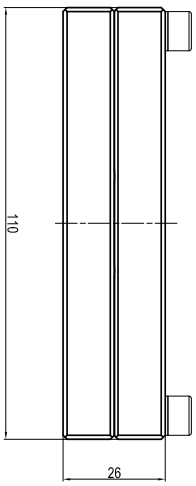

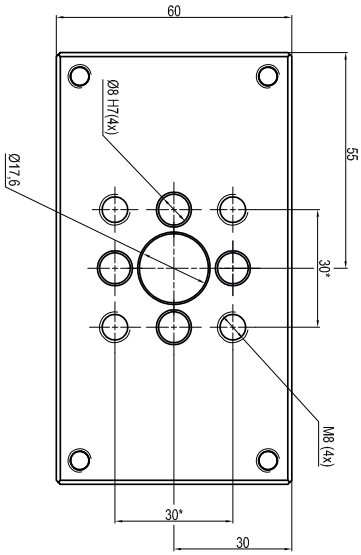

A Knurled

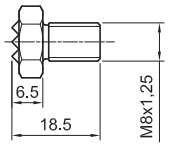

C

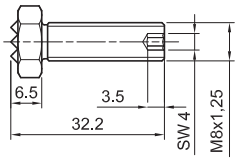

L

Tips	Weight
LGPK6940A-L	19g
LGPK6940A-C	14g

B Knurled
Self adjusting

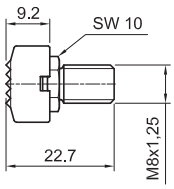

C

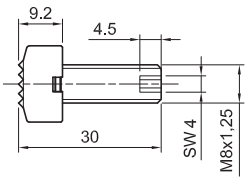

L

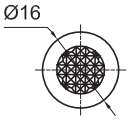

Tips	Weight
LGPK6940B-L	22g
LGPK6940B-C	17g

C Flat

C

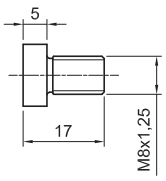

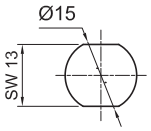

L

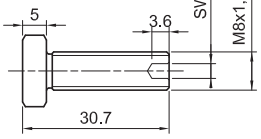

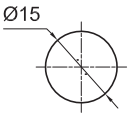

Tips	Weight
LGPK6940C-L	20g
LGPK6940C-C	14g

D Concave/Convex

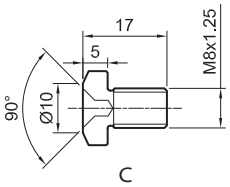

C

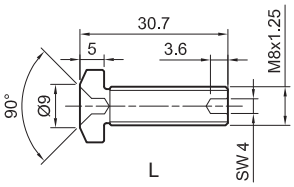

L

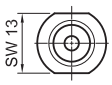

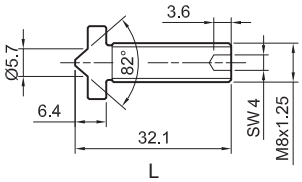

L

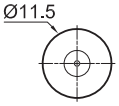

Concave

Tips	Weight
LGPK6940D-L	19g
LGPK6940D-C	13g

Convex

Tips	Weight
LGPK6940D-L	19g

E Flat
Self adjusting

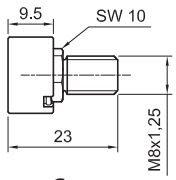

C

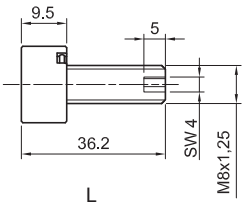

L

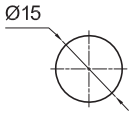

Tips	Weight
LGPK6940E-L	24g
LGPK6940E-C	19g

5

UNICLAMP

PNEUMATIC POWER PIVOTS

Without brake 60-600 Nm

UAGP063	2
UAGP075	5
UAGP080	8
UAGP120	11
UAGP150	14
UAGP155	17
UAGP170	20
UAGP210	23
UAGP215	26
UAGP300	29
UAGP350	32
UAGP355	35
UAGP600	38
UAGP605	41

With brake 60-600 Nm

UAGP063	44
UAGP075	47
UAGP080	50
UAGP120	53
UAGP150	56
UAGP155	59
UAGP170	62
UAGP210	65
UAGP215	68
UAGP300	71
UAGP350	74
UAGP355	77
UAGP600	80
UAGP605	83

Adjustable

UAGR063	86

UAGP 063

Pneumatic power pivot 16 Nm without brake

Pneumatic power pivot without brake typically used to rotate and dump fixtures and parts in a desired position.

- High repeatability
- Mechanical stops
- Double pneumatic cushioning
- Fixing ports on 4 sides
- Roller bearings to support heavy load
- Orientable table in 4 pre-set positions
- Version with brake available

CHARACTERISTICS

Operating temperature	**5° ÷ 45° C**
Min./Max. Operating pressure	**0,4 / 0,6 MPa**
Bore Ø	**63 mm**
Pivot rotation	**45°/60°/ 90°/120°**
Holding moment	**1500 Nm**
Max. torque at rotary table (0,55MPa)	**16 Nm**
Weight	**5 kg**
Pneumatic supply ports	**G1/4**
Sensor	**electronic (optical)**
Supply voltage	**10 ÷ 30 Vdc**
IP code	**IP 65**

OPTICAL SENSOR

HIGH REPEATABILITY

CODIFICATION KEY

UAG	P	063	**O**	K	**090**	W	0	
1	2	3	4	5	6	7	8	9

1 SERIES
UAG = UNICLAMP Power pivot

2 VERSION
P = Pneumatic

3 SIZE
063 = 16 Nm Ø 63 mm

4 TABLE POSITION
O = Horizontal 90° *
P = Horizontal mirror of "O" **
V = Vertical 180°
Z = Vertical mirror of "V"
*Max opening angle 90°
**Max opening angle 60°

5 SENSOR
N = No sensor (with protection plate)
K = Electronic sensor PNP, M12 (DF-K)
Y = Electronic sensor PNP, M12 (DF-Y) white LED
J = Electronic sensor NPN, M12 (DF-J)

6 PIVOT ROTATION
120 = 120°
090 = 90°
060 = 60°
045 = 45°

7 BRAKE SYSTEM
W = Without brake

8 PRODUCT REVISION
Assigned by UNIVER

9 ATEX
X = ATEX option
See ATEX Catalogue for types and versions

O | Horizontal 90°

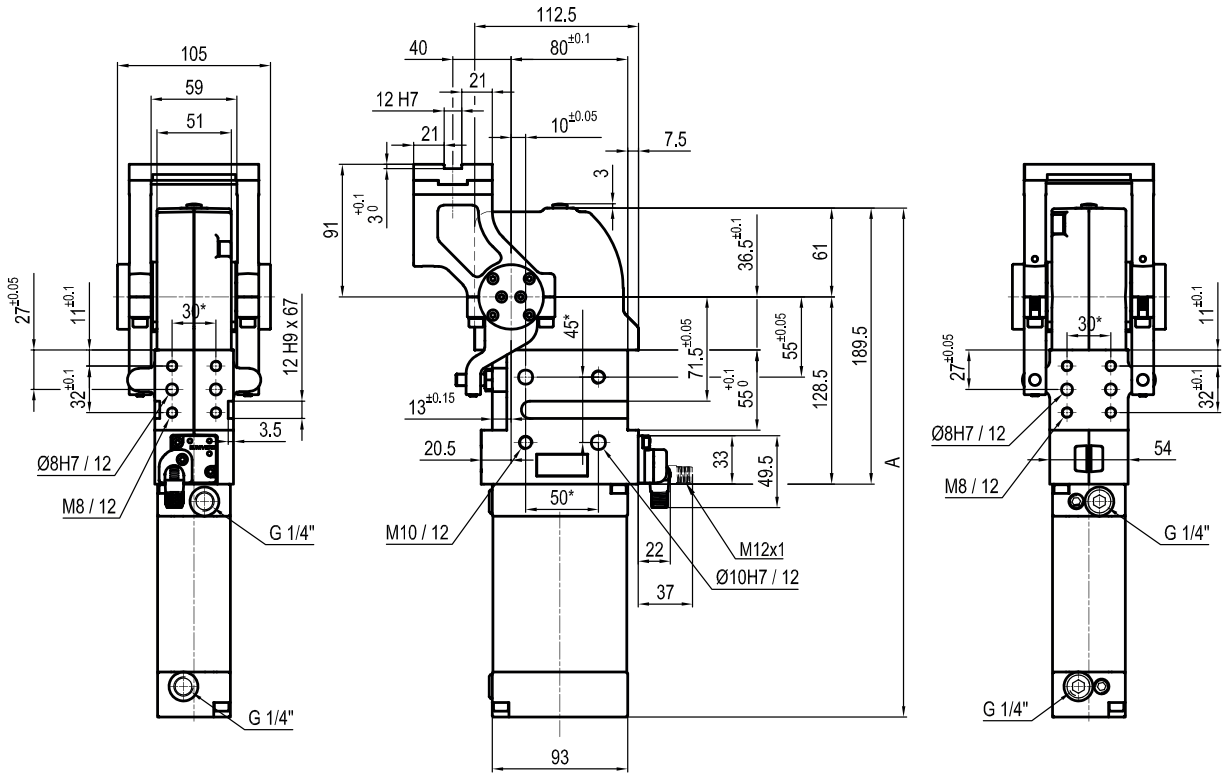

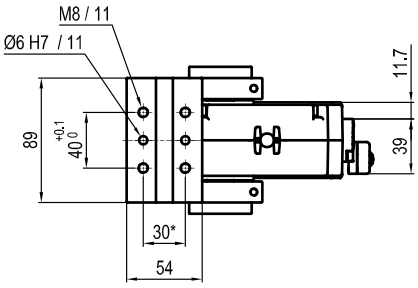

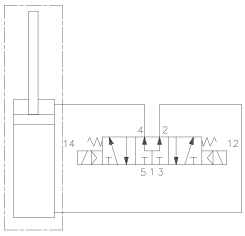

Pivot rotation (°)	A
45°	307.5
60°	315.5
90°	333
120°*	349.5

**ONLY FOR TABLE POSITION "V" AND "Z"*

**TOLERANCE BETWEEN DOWELS ± 0,02 BETWEEN SCREW HOLES ± 0,1*

Sensors

Electronic (optical)

DF-K PNP M12
DF-J NPN M12
DF-Y PNP M12 White LED

P Horizontal
Mirror of "O" position

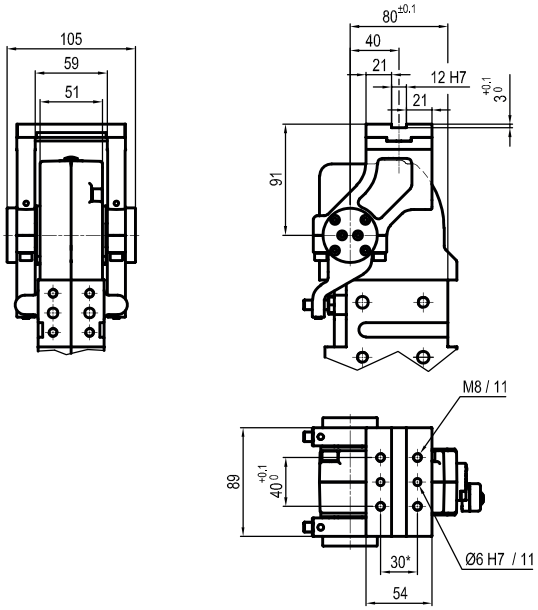

V Vertical 180°

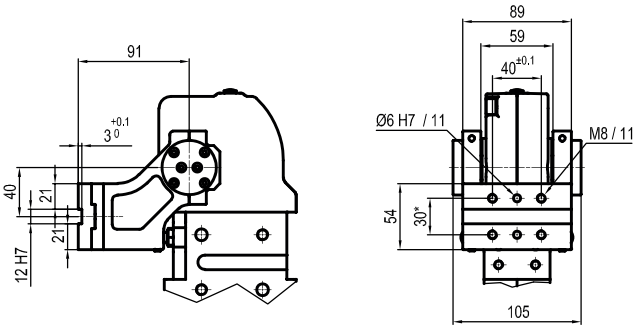

Z Vertical
Mirror of "V" position

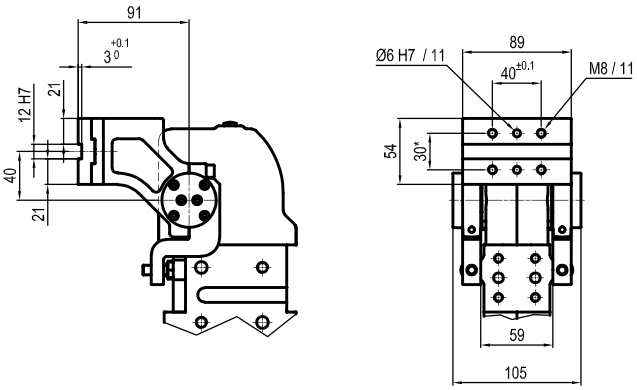

UAGP 075

Pneumatic power pivot 75 Nm without brake

Pneumatic power pivot without brake typically used to rotate and dump fixtures and parts in a desired position.

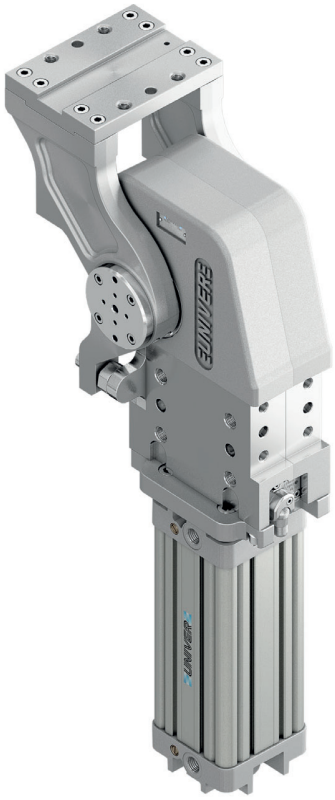

- High repeatability
- Mechanical stops
- Integrated flow control system
- Double pneumatic cushioning
- Fixing ports on 4 sides
- Tapered roller bearings to support heavy load
- Orientable table in 4 pre-set positions
- Version with brake available

CHARACTERISTICS

Operating temperature	**5° ÷ 45° C**
Min./Max. Operating pressure	**0,4 / 0,6 MPa**
Bore Ø	**80 mm**
Pivot rotation	**45°/60°/ 90°/120°**
Holding moment	**6000 Nm**
Max. torque at rotary table (0,55MPa)	**75 Nm**
Weight	**18 Kg**
Pneumatic supply ports	**G3/8**
Sensor	**electronic (optical)**
Supply voltage	**10 ÷ 30 Vdc**
IP code	**IP 65**

OPTICAL SENSOR

FLOW CONTROL SYSTEM

HIGH REPEATABILITY

CODIFICATION KEY

UAG	P	075	**O**	K	**090**	W	**S**	0	
1	2	3	4	5	6	7	8	9	10

1 SERIES
UAG = UNICLAMP Power pivot

2 VERSION
P = Pneumatic

3 SIZE
075 = 75 Nm Ø 80 mm

4 TABLE POSITION
O = Horizontal 90°
P = Horizontal mirror of "O"*
V = Vertical 180°
Z = Vertical mirror of "V"
*Max opening angle 60°

5 SENSOR
N = No sensor (with protection plate)
K = Electronic sensor PNP, M12 (DF-K)
Y = Electronic sensor PNP, M12 (DF-Y) white LED
J = Electronic sensor NPN, M12 (DF-J)

6 PIVOT ROTATION
120 = 120°
090 = 90°
060 = 60°
045 = 45°

7 BRAKE SYSTEM
W = Without brake

8 CONNECTIONS
S = Left side (Standard)
D = Right side
F = Front side
P = Rear side

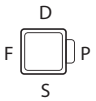

9 PRODUCT REVISION
Assigned by UNIVER

10 ATEX
X = ATEX option
See ATEX Catalogue for types and versions

O | Horizontal 90°

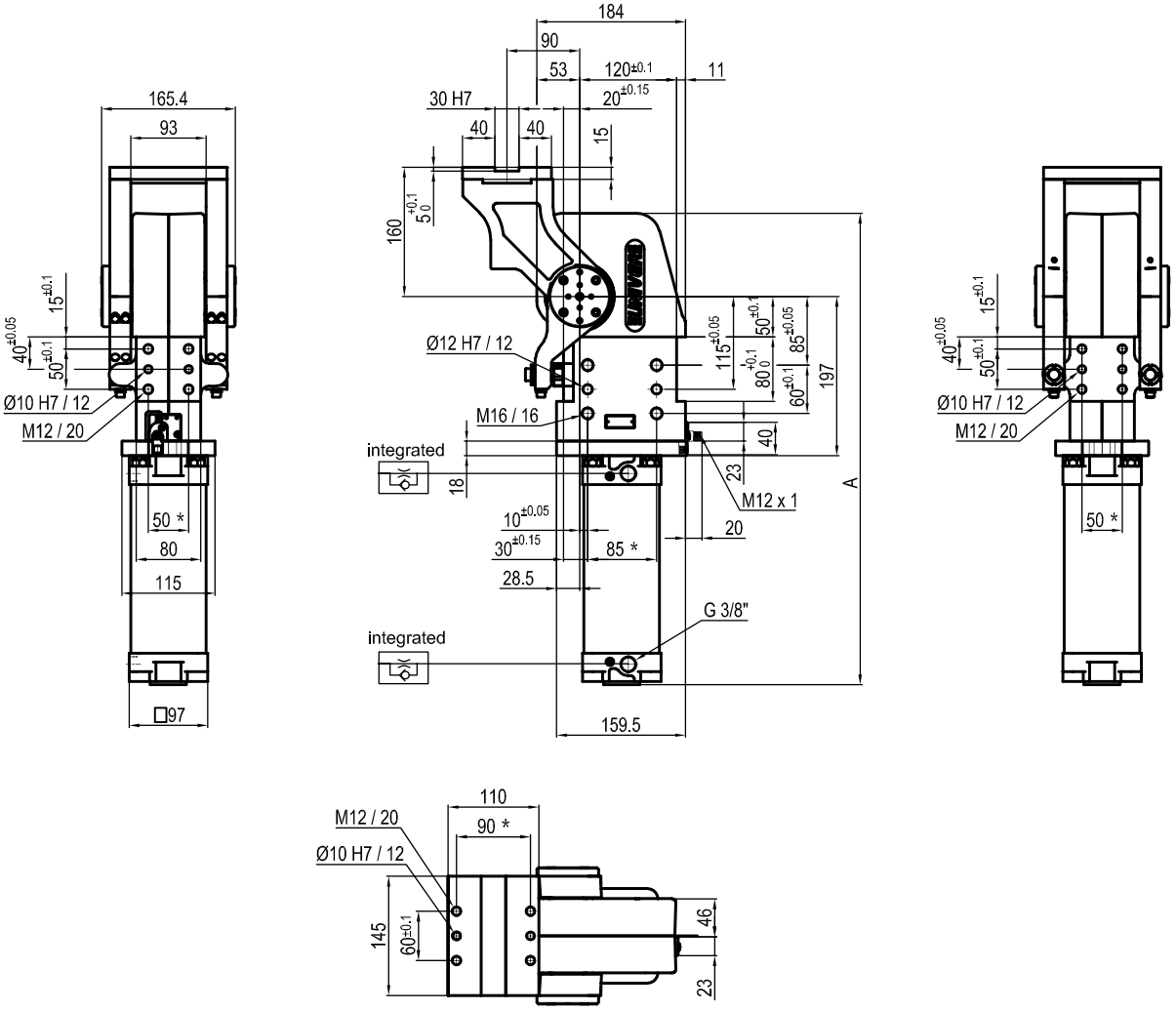

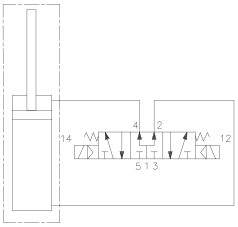

Pivot rotation (°)	A
45°	504
60°	518
90°	549
120°	583.5

**TOLERANCE BETWEEN DOWELS ± 0,02 BETWEEN SCREW HOLES ± 0,1*

Sensors

Electronic (optical)

DF-K PNP M12
DF-J NPN M12
DF-Y PNP M12 White LED

P Horizontal
Mirror of "**O**" position

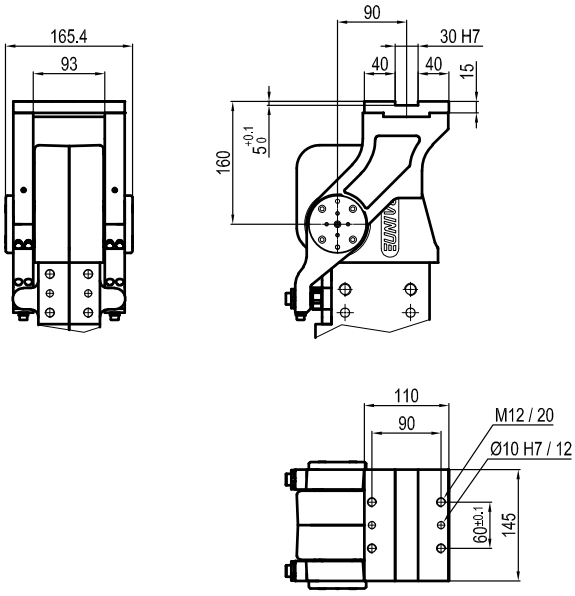

V Vertical 180°

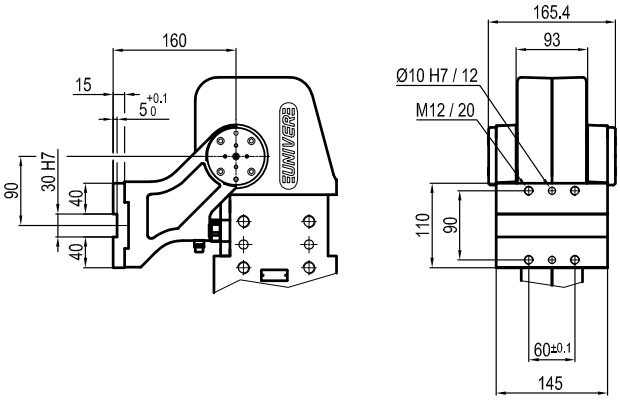

Z Vertical
Mirror of "**V**" position

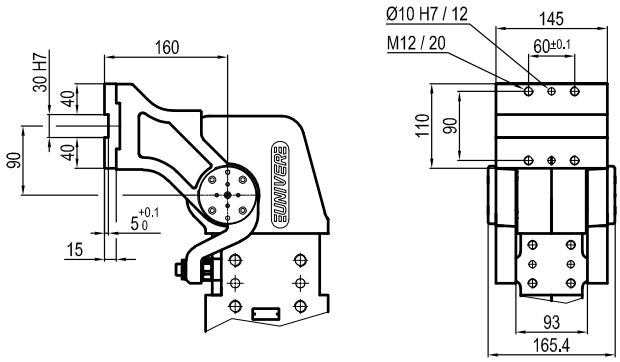

UAGP 080

Pneumatic power pivot 60 Nm without brake

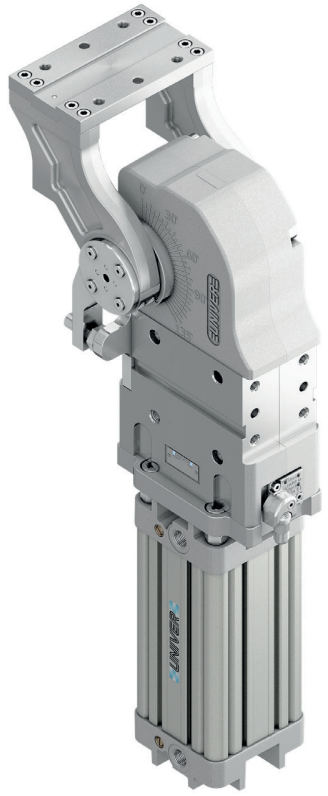

Pneumatic power pivot without brake typically used to rotate and dump fixtures and parts in a desired position.

- High repeatability
- Mechanical stops
- Integrated flow control system
- Double pneumatic cushioning
- Fixing ports on 4 sides
- Tapered roller bearings to support heavy load
- Orientable table in 4 pre-set positions
- Version with brake available

CHARACTERISTICS

Operating temperature	**5° ÷ 45° C**
Min./Max. Operating pressure	**0,4 / 0,6 MPa**
Bore Ø	**80 mm**
Pivot rotation	**45°/60°/ 90°/120°**
Holding moment	**4000 Nm**
Max. torque at rotary table (0,55MPa)	**60 Nm**
Weight	**15 Kg**
Pneumatic supply ports	**G3/8**
Sensor	**electronic (optical)**
Supply voltage	**10 ÷ 30 Vdc**
IP code	**IP 65**

OPTICAL SENSOR

FLOW CONTROL SYSTEM

HIGH REPEATABILITY

CODIFICATION KEY

UAG	P	080	**O**	K	**090**	W	**S**	0	
1	2	3	4	5	6	7	8	9	10

1 SERIES
UAG = UNICLAMP Power pivot

2 VERSION
P = Pneumatic

3 SIZE
080 = 60 Nm Ø 80 mm

4 TABLE POSITION
O = Horizontal 90°
P = Horizontal mirror of "O"*
V = Vertical 180°
Z = Vertical mirror of "V"
*Max opening angle 60°

5 SENSOR
N = No sensor (with protection plate)
K = Electronic sensor PNP, M12 (DF-K)
Y = Electronic sensor PNP, M12 (DF-Y) white LED
J = Electronic sensor NPN, M12 (DF-J)

6 PIVOT ROTATION
120 = 120°
090 = 90°
060 = 60°
045 = 45°

7 BRAKE SYSTEM
W = Without brake

8 CONNECTIONS
S = Left side (Standard)
D = Right side
F = Front side
P = Rear side

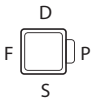

9 PRODUCT REVISION
Assigned by UNIVER

10 ATEX
X = ATEX option
See ATEX Catalogue for types and versions

O | Horizontal 90°

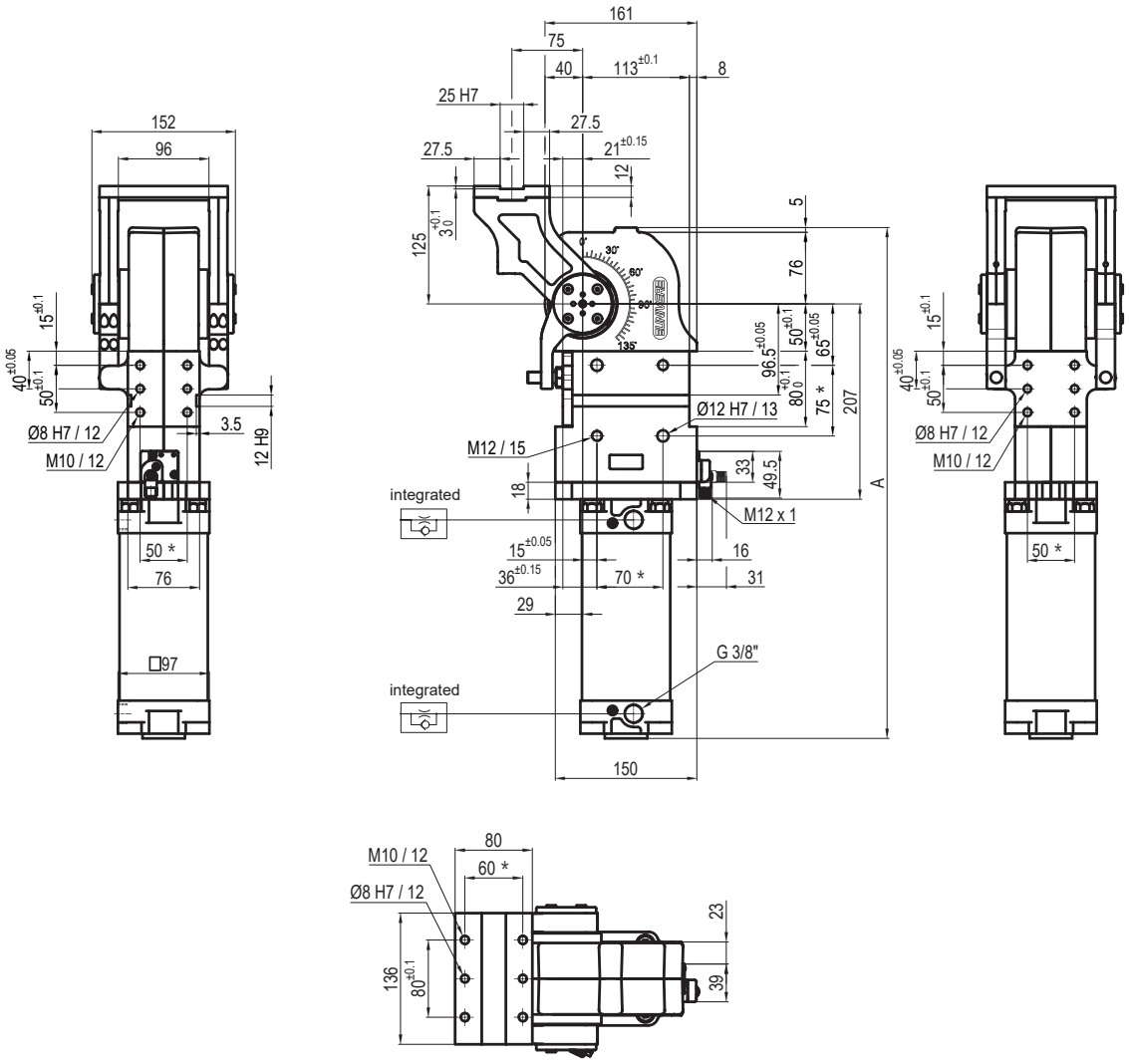

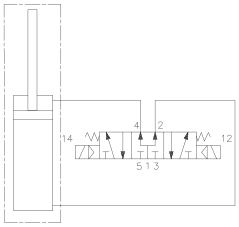

Pivot rotation (°)	A
45°	480
60°	491.5
90°	516.5
120°	541.5

**TOLERANCE BETWEEN DOWELS ± 0,02 BETWEEN SCREW HOLES ± 0,1*

Sensors

Electronic (optical)

DF-K PNP M12
DF-J NPN M12
DF-Y PNP M12 White LED

P Horizontal
Mirror of "O" position

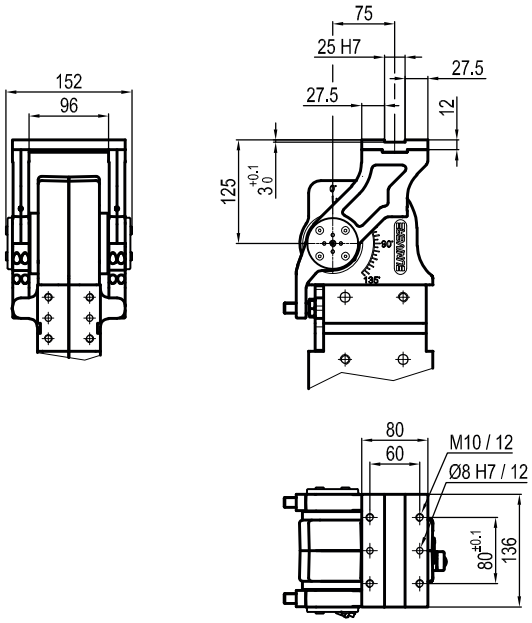

V Vertical 180°

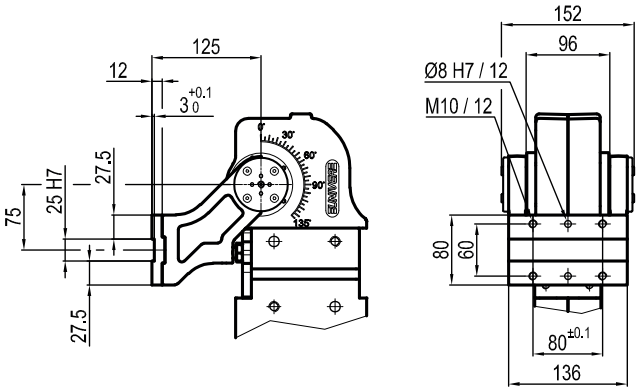

Z Vertical
Mirror of "V" position

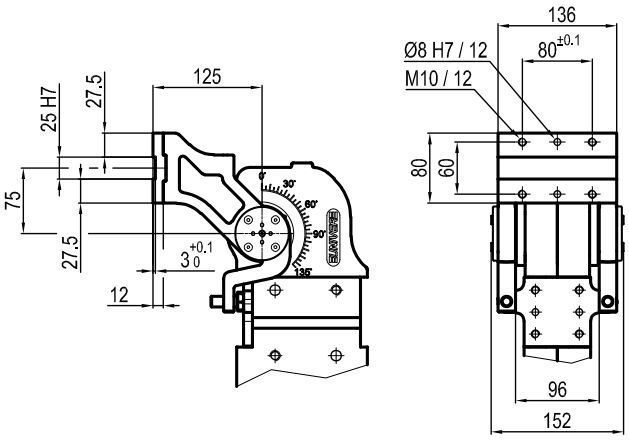

UAGP 120

Pneumatic power pivot 110 Nm without brake

Pneumatic power pivot without brake typically used to rotate and dump fixtures and parts in a desired position.

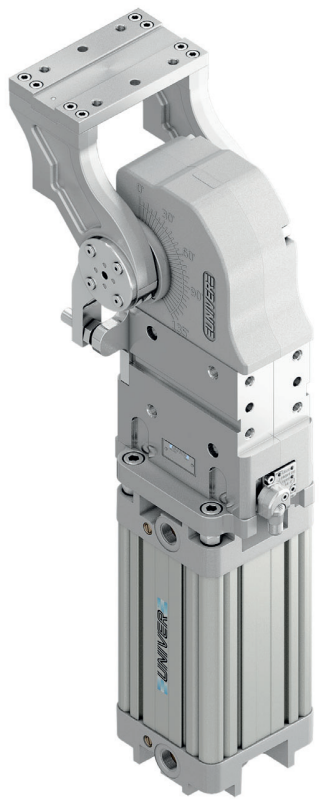

- High repeatability
- Mechanical stops
- Integrated flow control system
- Double pneumatic cushioning
- Fixing ports on 4 sides
- Tapered roller bearings to support heavy load
- Orientable table in 4 pre-set positions
- Version with brake available

CHARACTERISTICS

Operating temperature	**5° ÷ 45° C**
Min./Max. Operating pressure	**0,4 / 0,6 MPa**
Bore Ø	**100 mm**
Pivot rotation	**45°/60°/90°/120°**
Holding moment	**4000 Nm**
Max. torque at rotary table (0,55MPa)	**110 Nm**
Weight	**16,5 Kg**
Pneumatic supply ports	**G1/2**
Sensor	**electronic (optical)**
Supply voltage	**10 ÷ 30 Vdc**
IP code	**IP 65**

OPTICAL SENSOR

FLOW CONTROL SYSTEM

HIGH REPEATABILITY

CODIFICATION KEY

UAG	P	120	**O**	K	**090**	W	**S**	0	
1	2	3	4	5	6	7	8	9	10

1 SERIES
UAG = UNICLAMP Power pivot

2 VERSION
P = Pneumatic

3 SIZE
120 = 110 Nm Ø 100 mm

4 TABLE POSITION
O = Horizontal 90°
P = Horizontal mirror of "O"*
V = Vertical 180°
Z = Vertical mirror of "V"
*Max opening angle 60°

5 SENSOR
N = No sensor (with protection plate)
K = Electronic sensor PNP, M12 (DF-K)
Y = Electronic sensor PNP, M12 (DF-Y) white LED
J = Electronic sensor NPN, M12 (DF-J)

6 PIVOT ROTATION
120 = 120°
090 = 90°
060 = 60°
045 = 45°

7 BRAKE SYSTEM
W = Without brake

8 CONNECTIONS
S = Left side (Standard)
D = Right side
F = Front side
P = Rear side

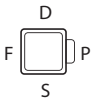

9 PRODUCT REVISION
Assigned by UNIVER

10 ATEX
X = ATEX option
See ATEX Catalogue for types and versions

O | Horizontal 90°

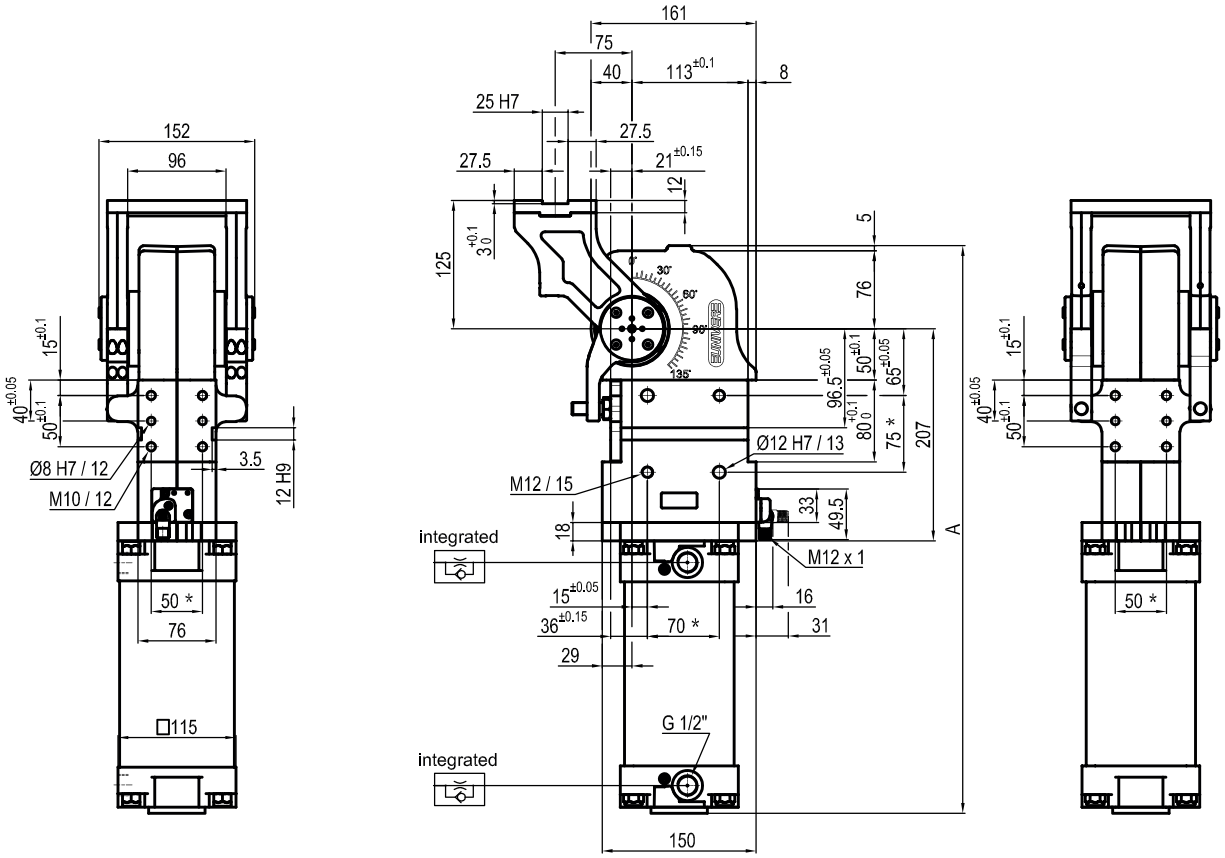

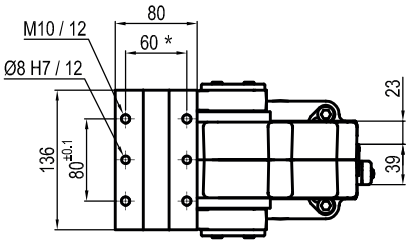

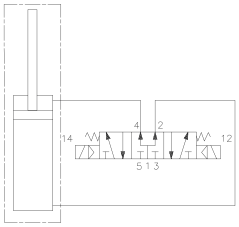

Pivot rotation (°)	A
45°	492
60°	503.5
90°	528.5
120°	553.5

**TOLERANCE BETWEEN DOWELS ± 0,02 BETWEEN SCREW HOLES ± 0,1*

Sensors

Electronic (optical)

DF-K PNP M12
DF-J NPN M12
DF-Y PNP M12 White LED

P Horizontal
Mirror of "O" position

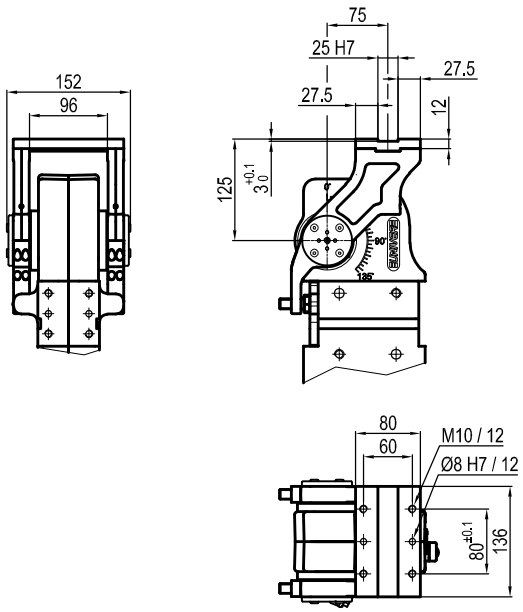

V Vertical 180°

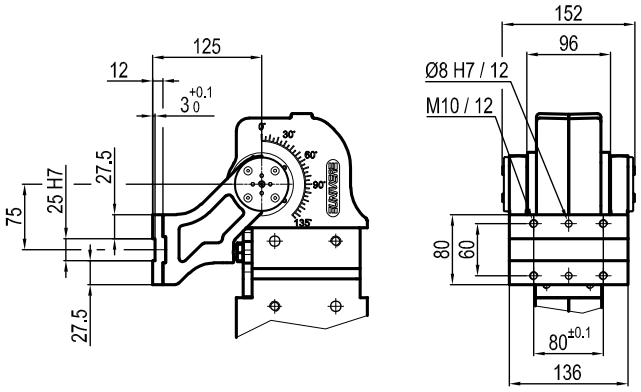

Z Vertical
Mirror of "V" position

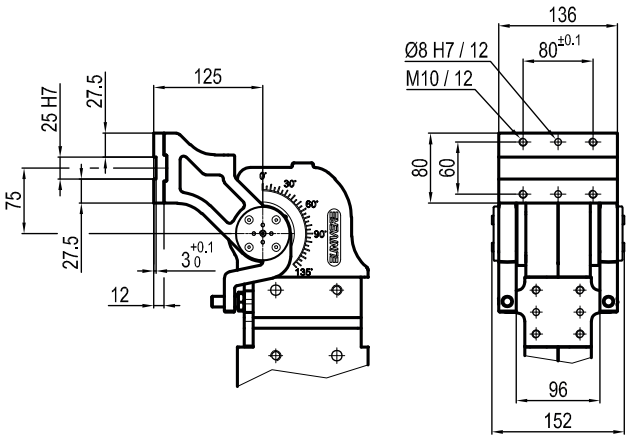

UAGP 150

Pneumatic power pivot 120 Nm without brake

Pneumatic power pivot without brake typically used to rotate and dump fixtures and parts in a desired position.

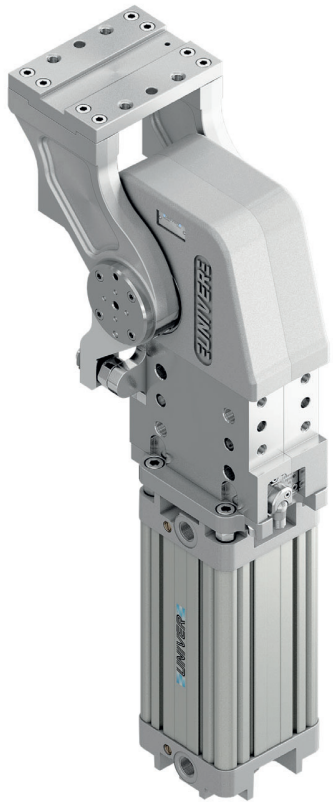

- High repeatability
- Mechanical stops
- Integrated flow control system
- Double pneumatic cushioning
- Fixing ports on 4 sides
- Tapered roller bearings to support heavy load
- Orientable table in 4 pre-set positions
- Version with brake available

CHARACTERISTICS

Operating temperature	**5° ÷ 45° C**
Min./Max. Operating pressure	**0,4 / 0,6 MPa**
Bore Ø	**100 mm**
Pivot rotation	**45°/60°/90°/120°**
Holding moment	**6000 Nm**
Max. torque at rotary table (0,55MPa)	**120 Nm**
Weight	**23 Kg**
Pneumatic supply ports	**G1/2**
Sensor	**electronic (optical)**
Supply voltage	**10 ÷ 30 Vdc**
IP code	**IP 65**

OPTICAL SENSOR

FLOW CONTROL SYSTEM

HIGH REPEATABILITY

CODIFICATION KEY

UAG	P	150	**O**	K	**090**	W	**S**	0	
1	2	3	4	5	6	7	8	9	10

1 SERIES
UAG = UNICLAMP Power pivot

2 VERSION
P = Pneumatic

3 SIZE
150 = 120 Nm Ø 100 mm

4 TABLE POSITION
O = Horizontal 90°
P = Horizontal mirror of "O"*
V = Vertical 180°
Z = Vertical mirror of "V"
*Max opening angle 60°

5 SENSOR
N = No sensor (with protection plate)
K = Electronic sensor PNP, M12 (DF-K)
Y = Electronic sensor PNP, M12 (DF-Y) white LED
J = Electronic sensor NPN, M12 (DF-J)

6 PIVOT ROTATION
120 = 120°
090 = 90°
060 = 60°
045 = 45°

7 BRAKE SYSTEM
W = Without brake

8 CONNECTIONS
S = Left side (Standard)
D = Right side
F = Front side
P = Rear side

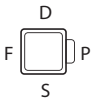

9 PRODUCT REVISION
Assigned by UNIVER

10 ATEX
X = ATEX option
See ATEX Catalogue for types and versions

O | Horizontal 90°

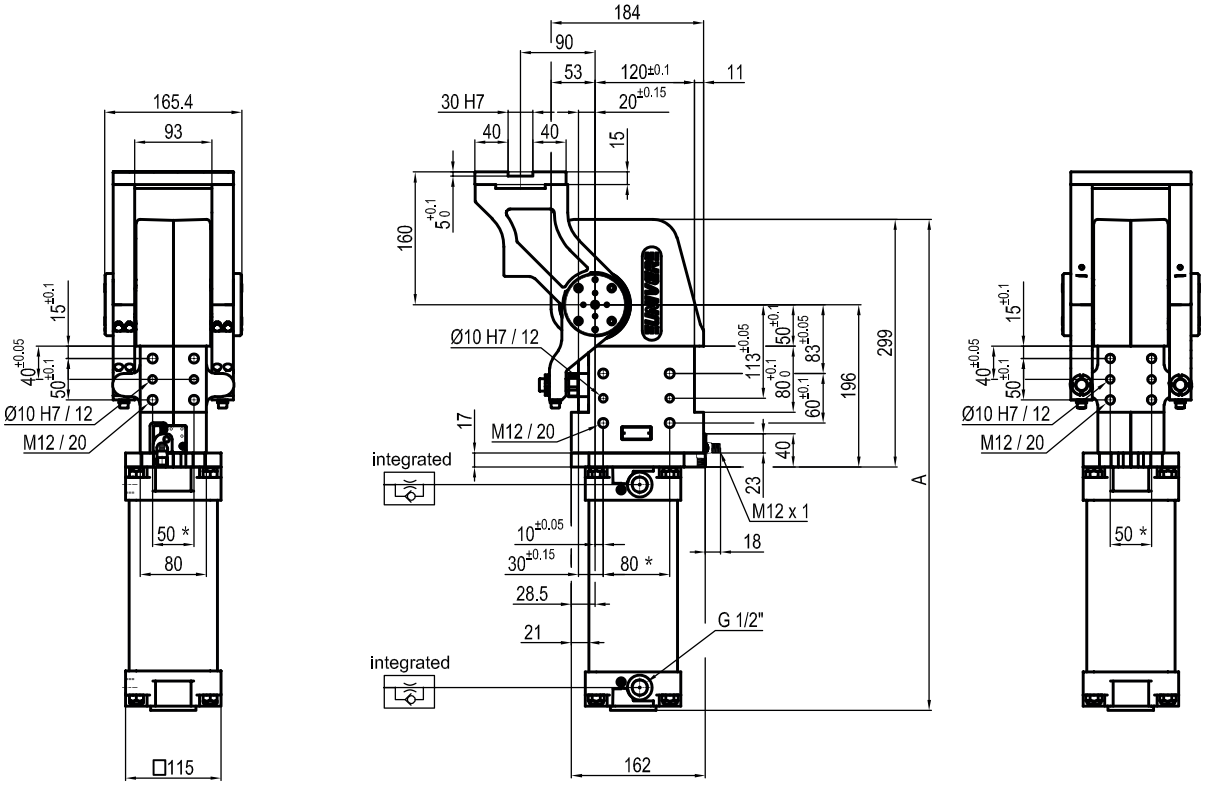

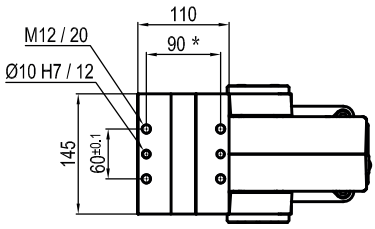

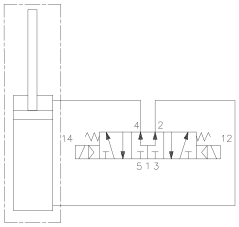

Pivot rotation (°)	A
45°	513.5
60°	527
90°	558
120°	592.5

**TOLERANCE BETWEEN DOWELS ± 0,02 BETWEEN SCREW HOLES ± 0,1*

Sensors

Electronic (optical)

DF-K PNP M12
DF-J NPN M12
DF-Y PNP M12 White LED

P Horizontal
Mirror of "O" position

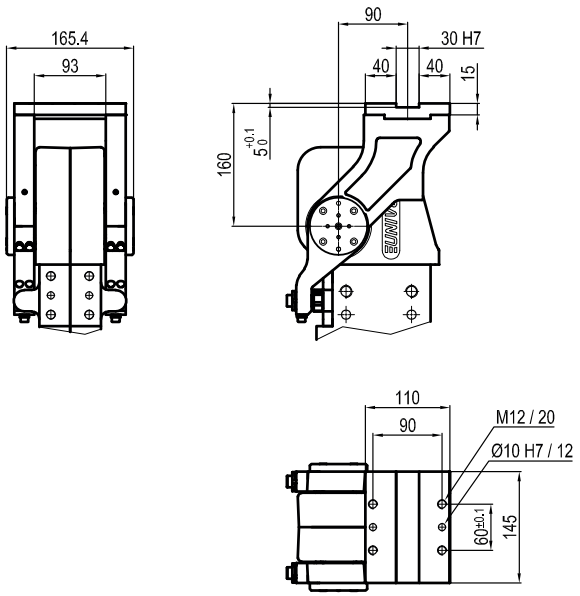

V Vertical 180°

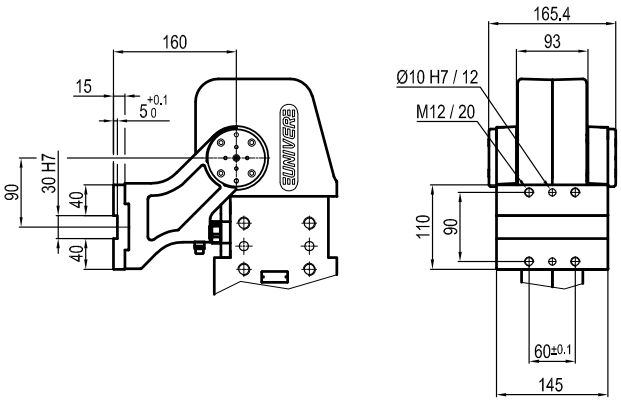

Z Vertical
Mirror of "V" position

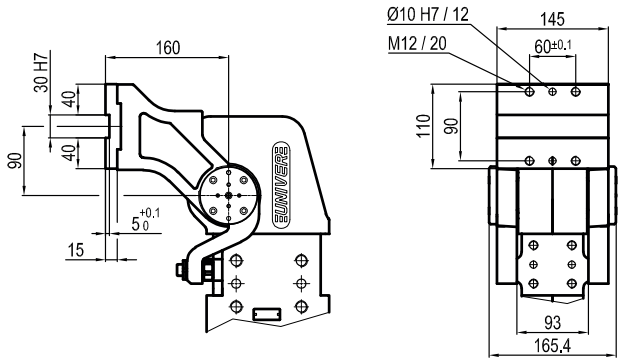

UAGP 155

Pneumatic power pivot 120 Nm without brake

Pneumatic power pivot without brake typically used to rotate and dump fixtures and parts in a desired position.

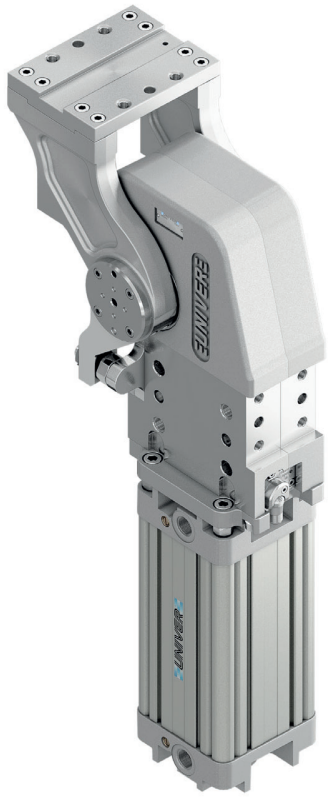

- High repeatability
- Mechanical stops
- Integrated flow control system
- Double pneumatic cushioning
- Fixing ports on 4 sides
- Tapered roller bearings to support heavy load
- Orientable table in 4 pre-set positions
- Version with brake available

CHARACTERISTICS

Operating temperature	**5° ÷ 45° C**
Min./Max. Operating pressure	**0,4 / 0,6 MPa**
Bore Ø	**100 mm**
Pivot rotation	**45°/60°/90°/120°**
Holding moment	**6000 Nm**
Max. torque at rotary table (0,55MPa)	**120 Nm**
Weight	**23 Kg**
Pneumatic supply ports	**G1/2**
Sensor	**electronic (optical)**
Supply voltage	**10 ÷ 30 Vdc**
IP code	**IP 65**

OPTICAL SENSOR

FLOW CONTROL SYSTEM

HIGH REPEATABILITY

CODIFICATION KEY

UAG	P	155	**O**	K	**090**	W	**S**	0	
1	2	3	4	5	6	7	8	9	10

1 SERIES
UAG = UNICLAMP Power pivot

2 VERSION
P = Pneumatic

3 SIZE
155 = 120 Nm Ø 100 mm

4 TABLE POSITION
O = Horizontal 90°
P = Horizontal mirror of "O"*
V = Vertical 180°
Z = Vertical mirror of "V"
*Max opening angle 60°

5 SENSOR
N = No sensor (with protection plate)
K = Electronic sensor PNP, M12 (DF-K)
Y = Electronic sensor PNP, M12 (DF-Y) white LED
J = Electronic sensor NPN, M12 (DF-J)

6 PIVOT ROTATION
120 = 120°
090 = 90°
060 = 60°
045 = 45°

7 BRAKE SYSTEM
W = Without brake

8 CONNECTIONS
S = Left side (Standard)
D = Right side
F = Front side
P = Rear side

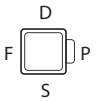

9 PRODUCT REVISION
Assigned by UNIVER

10 ATEX
X = ATEX option
See ATEX Catalogue for types and versions

O | Horizontal 90°

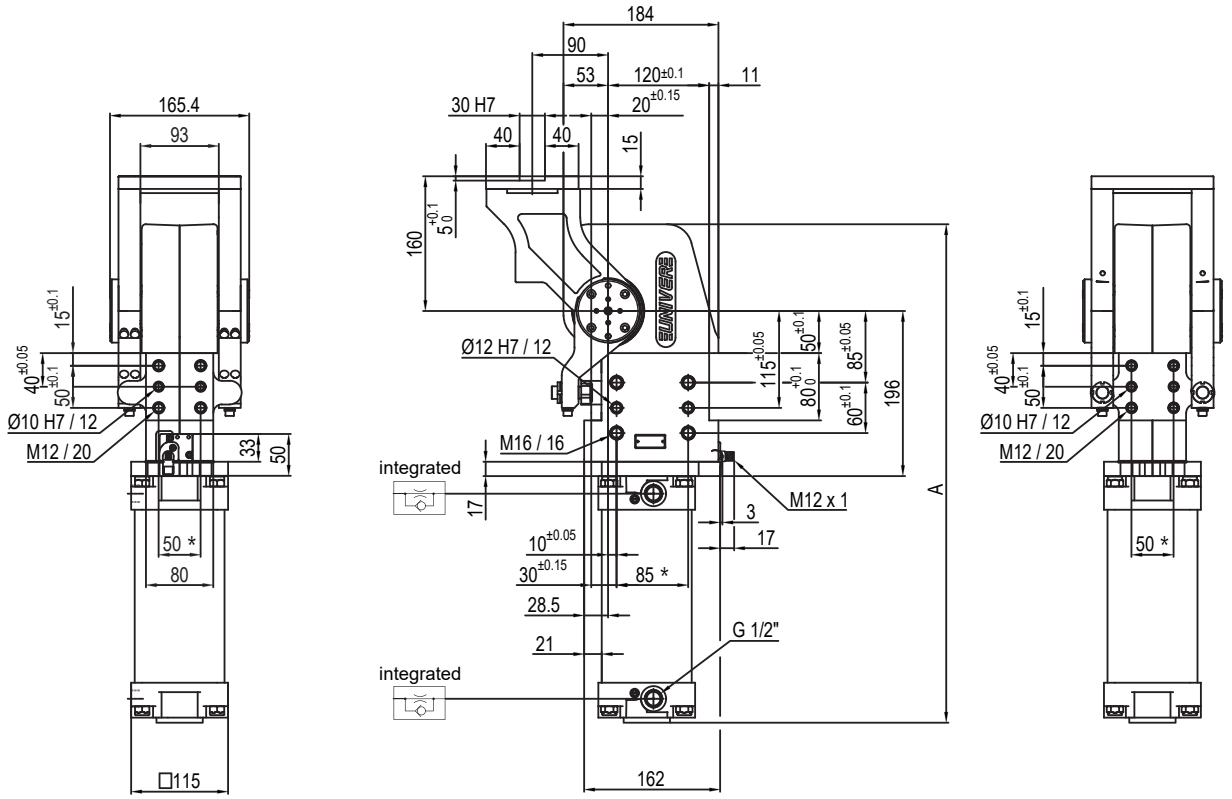

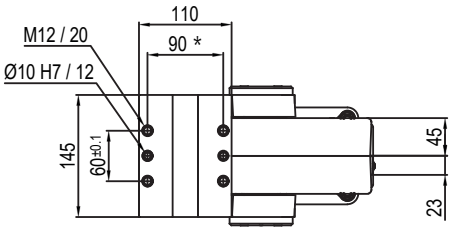

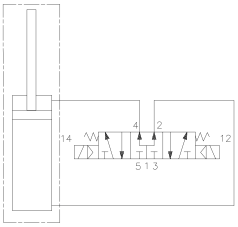

Pivot rotation (°)	A
45°	514.5
60°	528
90°	559
120°	593.5

**TOLERANCE BETWEEN DOWELS ± 0,02 BETWEEN SCREW HOLES ± 0,1*

Sensors

Electronic (optical)

DF-K PNP M12
DF-J NPN M12
DF-Y PNP M12 White LED

P Horizontal
Mirror of "O" position

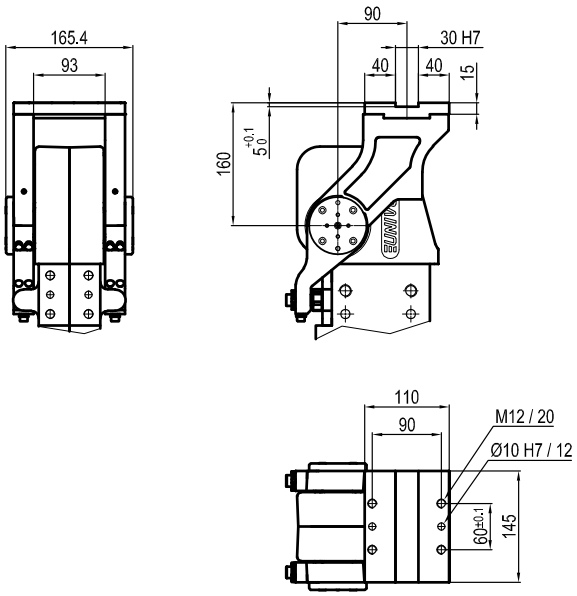

V Vertical 180°

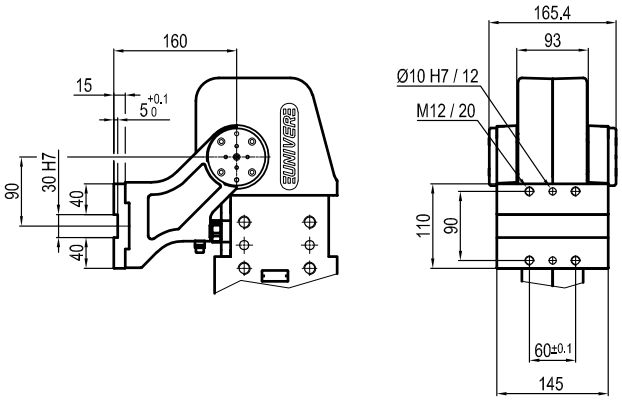

Z Vertical
Mirror of "V" position

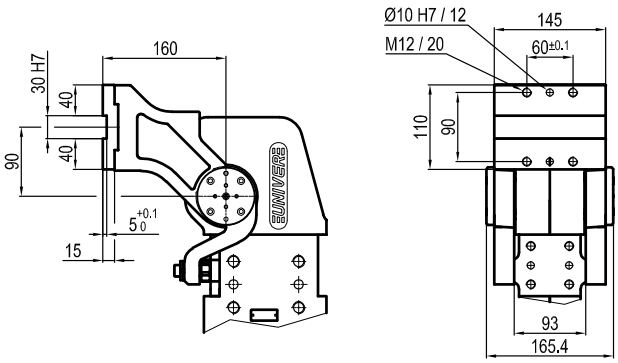

UAGP 170

Pneumatic power pivot 170 Nm without brake

Pneumatic power pivot without brake typically used to rotate and dump fixtures and parts in a desired position.

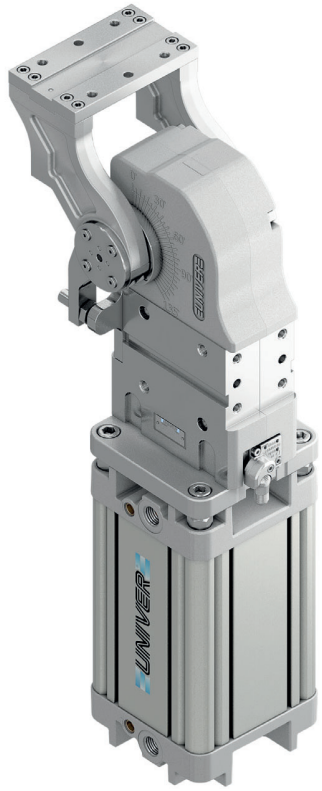

- High repeatability
- Mechanical stops
- Integrated flow control system
- Double pneumatic cushioning
- Fixing ports on 4 sides
- Tapered roller bearings to support heavy load
- Orientable table in 4 pre-set positions
- Version with brake available

CHARACTERISTICS

Operating temperature	**5° ÷ 45° C**
Min./Max. Operating pressure	**0,4 / 0,6 MPa**
Bore Ø	**125 mm**
Pivot rotation	**45°/60°/90°/120°**
Holding moment	**4000 Nm**
Max. torque at rotary table (0,55MPa)	**170 Nm**
Weight	**21,3 Kg**
Pneumatic supply ports	**G1/2**
Sensor	**electronic (optical)**
Supply voltage	**10 ÷ 30 Vdc**
IP code	**IP 65**

OPTICAL SENSOR

FLOW CONTROL SYSTEM

HIGH REPEATABILITY

CODIFICATION KEY

UAG	P	170	**O**	K	**090**	W	**S**	0	
1	2	3	4	5	6	7	8	9	10

1 SERIES
UAG = UNICLAMP Power pivot

2 VERSION
P = Pneumatic

3 SIZE
170 = 170 Nm Ø 125 mm

4 TABLE POSITION
O = Horizontal 90°
P = Horizontal mirror of "**O**"*
V = Vertical 180°
Z = Vertical mirror of "**V**"
*Max opening angle 60°

5 SENSOR
N = No sensor (with protection plate)
K = Electronic sensor PNP, M12 (DF-K)
Y = Electronic sensor PNP, M12 (DF-Y) white LED
J = Electronic sensor NPN, M12 (DF-J)

6 PIVOT ROTATION
120 = 120°
090 = 90°
060 = 60°
045 = 45°

7 BRAKE SYSTEM
W = Without brake

8 CONNECTIONS
S = Left side (Standard)
D = Right side
F = Front side
P = Rear side

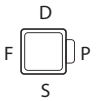

9 PRODUCT REVISION
Assigned by UNIVER

10 ATEX
X = ATEX option
See ATEX Catalogue for types and versions

O | Horizontal 90°

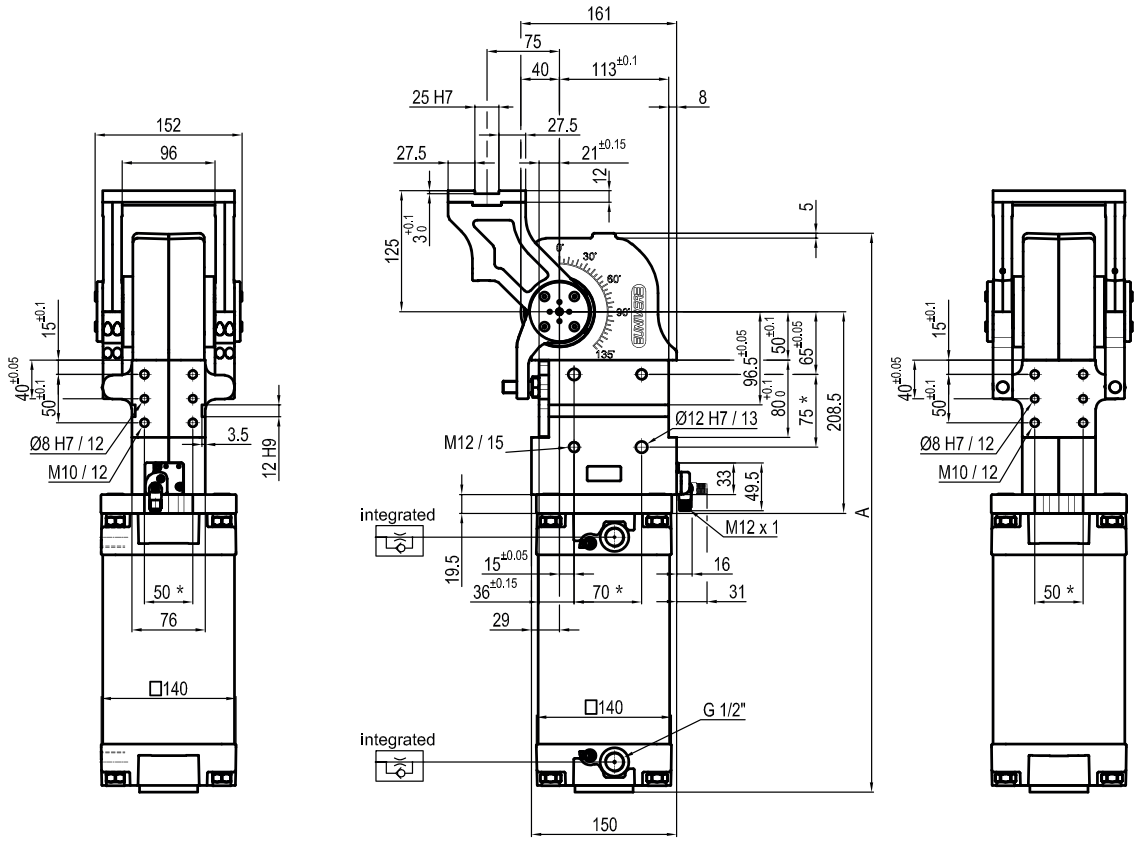

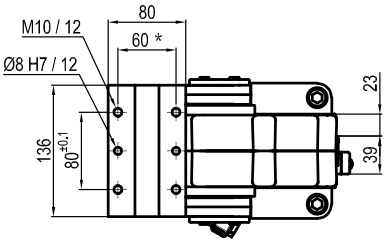

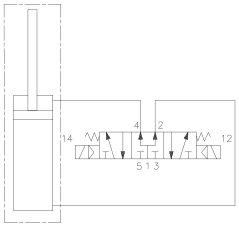

Pivot rotation (°)	A
45°	514.5
60°	526
90°	551
120°	576.5

**TOLERANCE BETWEEN DOWELS ± 0,02 BETWEEN SCREW HOLES ± 0,1*

Sensors

Electronic (optical)

DF-K PNP M12
DF-J NPN M12
DF-Y PNP M12 White LED

P Horizontal
Mirror of "O" position

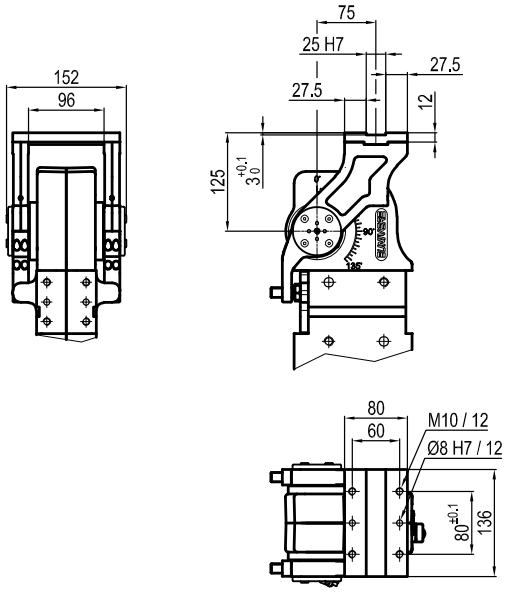

V Vertical 180°

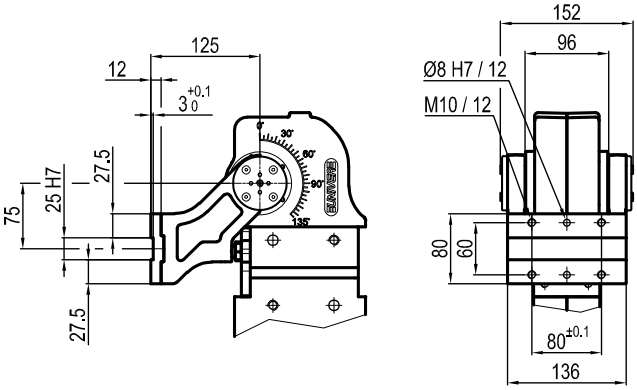

Z Vertical
Mirror of "V" position

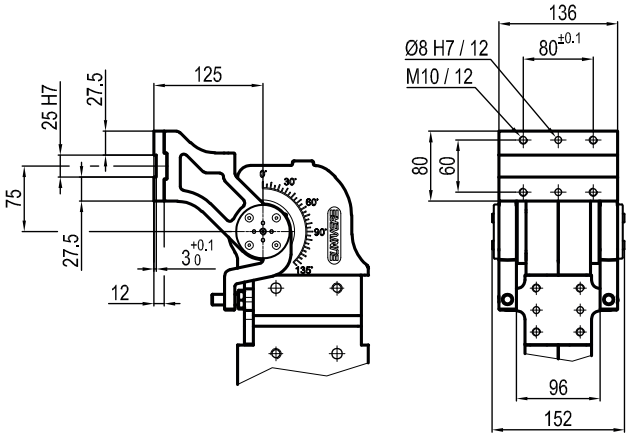

UAGP 210

Pneumatic power pivot 210 Nm without brake

Pneumatic power pivot without brake typically used to rotate and dump fixtures and parts in a desired position.

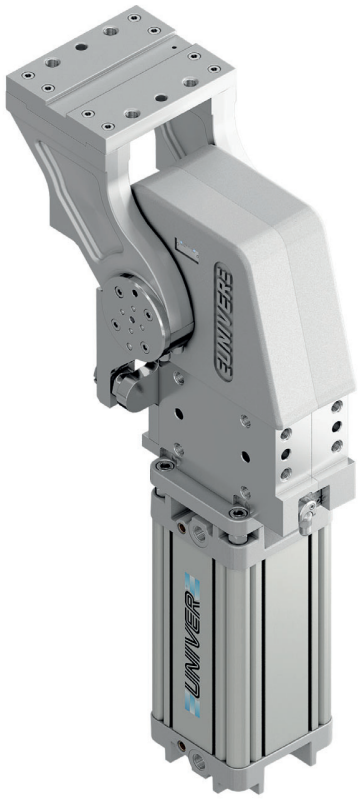

- High repeatability
- Mechanical stops
- Integrated flow control system
- Double pneumatic cushioning
- Fixing ports on 4 sides
- Tapered roller bearings to support heavy load
- Orientable table in 4 pre-set positions
- Version with brake available

CHARACTERISTICS

Operating temperature	**5° ÷ 45° C**
Min./Max. Operating pressure	**0,4 / 0,6 MPa**
Bore Ø	**125 mm**
Pivot rotation	**45°/60°/90°/120°**
Holding moment	**8000 Nm**
Max. torque at rotary table (0,55MPa)	**210 Nm**
Weight	**43 Kg**
Pneumatic supply ports	**G1/2**
Sensor	**electronic (optical)**
Supply voltage	**10 ÷ 30 Vdc**
IP code	**IP 65**

OPTICAL SENSOR

FLOW CONTROL SYSTEM

HIGH REPEATABILITY

CODIFICATION KEY

UAG	P	210	**O**	K	**090**	W	**S**	0	
1	2	3	4	5	6	7	8	9	10

1 SERIES
UAG = UNICLAMP Power pivot

2 VERSION
P = Pneumatic

3 SIZE
210 = 210 Nm Ø 125 mm

4 TABLE POSITION
O = Horizontal 90°
P = Horizontal mirror of "O"*
V = Vertical 180°
Z = Vertical mirror of "V"
*Max opening angle 60°

5 SENSOR
N = No sensor (with protection plate)
K = Electronic sensor PNP, M12 (DF-K)
Y = Electronic sensor PNP, M12 (DF-Y) white LED
J = Electronic sensor NPN, M12 (DF-J)

6 PIVOT ROTATION
120 = 120°
090 = 90°
060 = 60°
045 = 45°

7 BRAKE SYSTEM
W = Without brake

8 CONNECTIONS
S = Left side (Standard)
D = Right side
F = Front side
P = Rear side

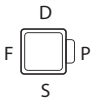

9 PRODUCT REVISION
Assigned by UNIVER

10 ATEX
X = ATEX option
See ATEX Catalogue for types and versions

O | Horizontal 90°

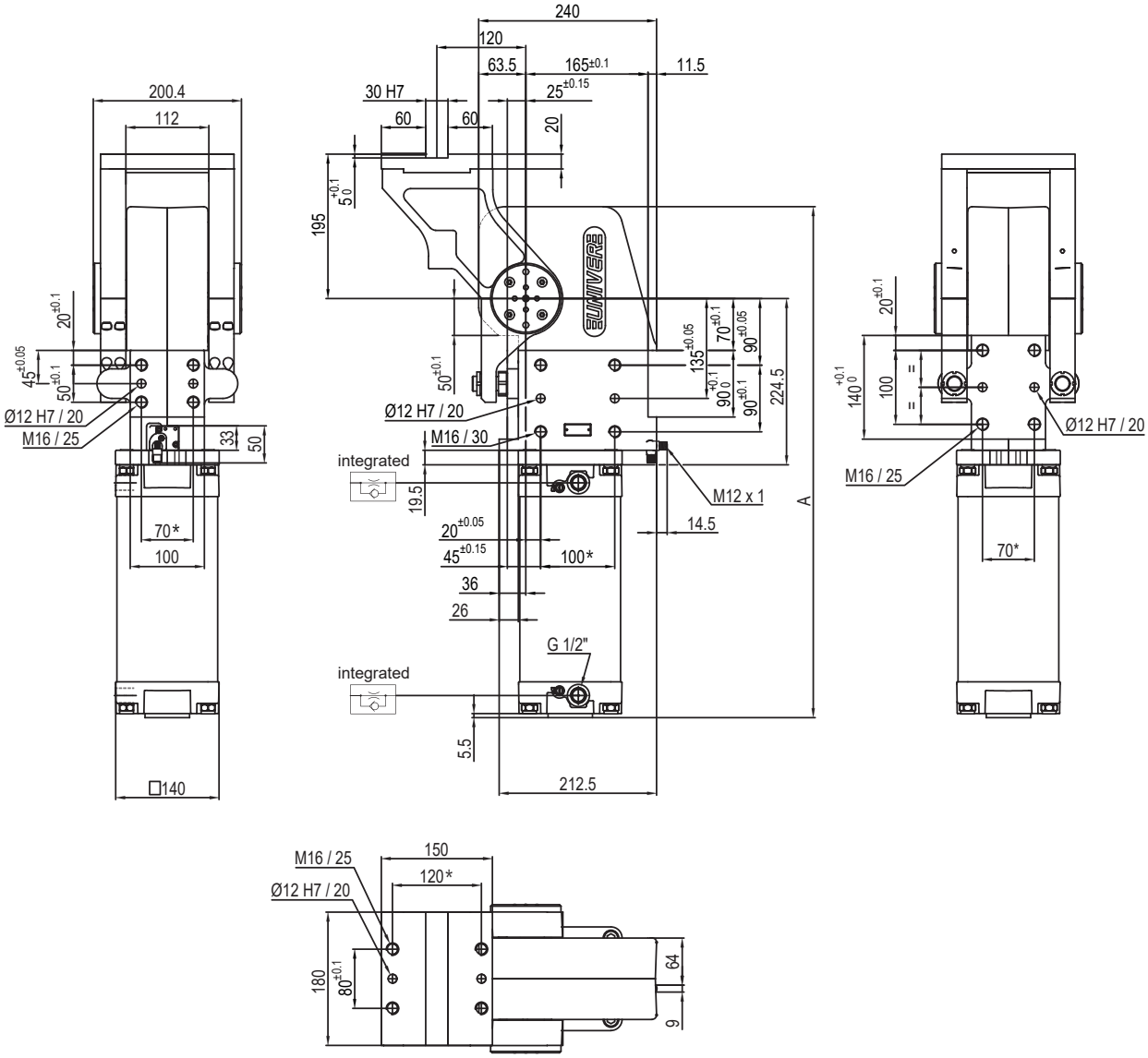

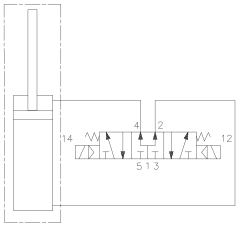

Pivot rotation (°)	A
45°	597
60°	613
90°	649.5
120°	690

**TOLERANCE BETWEEN DOWELS ± 0,02 BETWEEN SCREW HOLES ± 0,1*

Sensors

Electronic (optical)

DF-K PNP M12
DF-J NPN M12
DF-Y PNP M12 White LED

P Horizontal
Mirror of "O" position

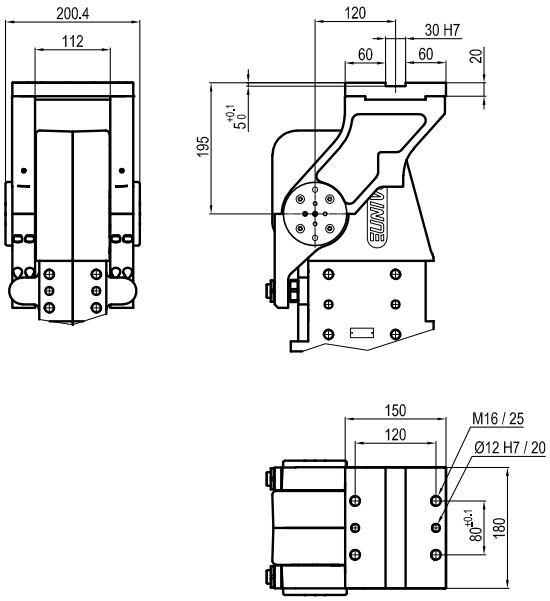

V Vertical 180°

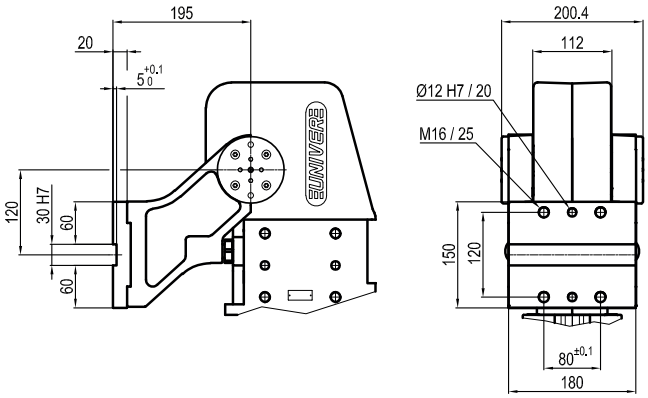

Z Vertical
Mirror of "V" position

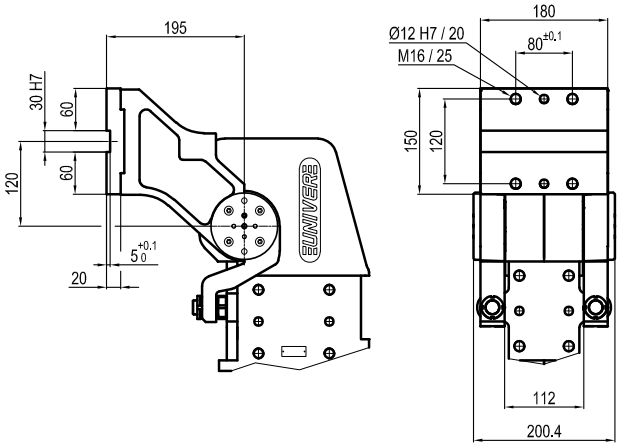

UAGP 215

Pneumatic power pivot 210 Nm without brake

Pneumatic power pivot without brake typically used to rotate and dump fixtures and parts in a desired position.

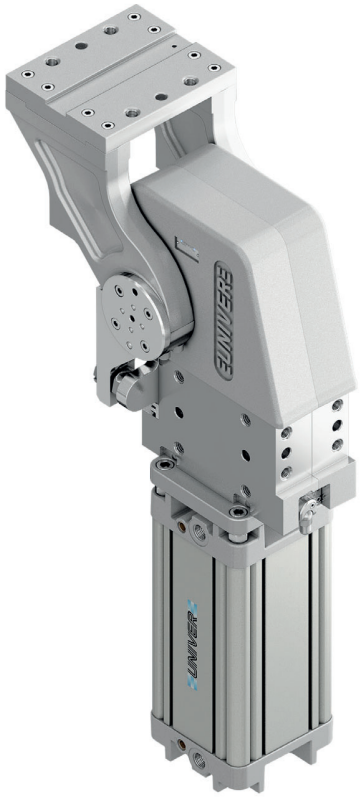

- High repeatability
- Mechanical stops
- Integrated flow control system
- Double pneumatic cushioning
- Fixing ports on 4 sides
- Tapered roller bearings to support heavy load
- Orientable table in 4 pre-set positions
- Version with brake available

CHARACTERISTICS

Operating temperature	**5° ÷ 45° C**
Min./Max. Operating pressure	**0,4 / 0,6 MPa**
Bore Ø	**125 mm**
Pivot rotation	**45°/60°/90°/120°**
Holding moment	**8000 Nm**
Max. torque at rotary table (0,55MPa)	**210 Nm**
Weight	**43 Kg**
Pneumatic supply ports	**G1/2**
Sensor	**electronic (optical)**
Supply voltage	**10 ÷ 30 Vdc**
IP code	**IP 65**

OPTICAL SENSOR

FLOW CONTROL SYSTEM

HIGH REPEATABILITY

CODIFICATION KEY

UAG	P	215	**O**	K	**090**	W	**S**	0	
1	2	3	4	5	6	7	8	9	10

1 SERIES
UAG = UNICLAMP Power pivot

2 VERSION
P = Pneumatic

3 SIZE
215 = 210 Nm Ø 125 mm

4 TABLE POSITION
O = Horizontal 90°
P = Horizontal mirror of "O"*
V = Vertical 180°
Z = Vertical mirror of "V"
*Max opening angle 60°

5 SENSOR
N = No sensor (with protection plate)
K = Electronic sensor PNP, M12 (DF-K)
Y = Electronic sensor PNP, M12 (DF-Y) white LED
J = Electronic sensor NPN, M12 (DF-J)

6 PIVOT ROTATION
120 = 120°
090 = 90°
060 = 60°
045 = 45°

7 BRAKE SYSTEM
W = Without brake

8 CONNECTIONS
S = Left side (Standard)
D = Right side
F = Front side
P = Rear side

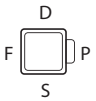

9 PRODUCT REVISION
Assigned by UNIVER

10 ATEX
X = ATEX option
See ATEX Catalogue for types and versions

O | Horizontal 90°

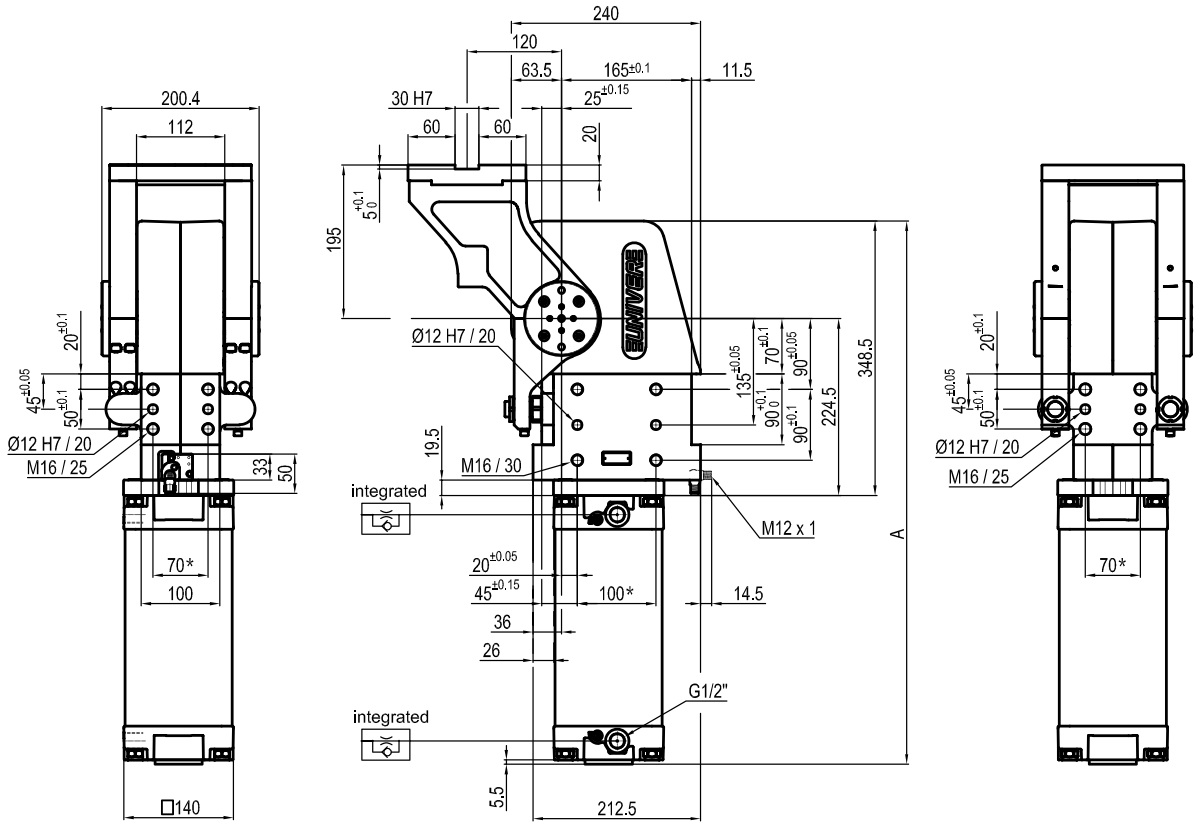

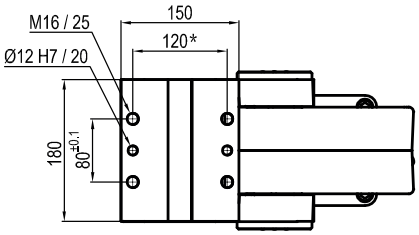

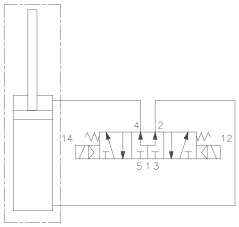

Pivot rotation (°)	A
45°	597
60°	613
90°	649.5
120°	690

**TOLERANCE BETWEEN DOWELS ± 0,02 BETWEEN SCREW HOLES ± 0,1*

Sensors

Electronic (optical)

DF-K PNP M12
DF-J NPN M12
DF-Y PNP M12 White LED

P Horizontal
Mirror of "O" position

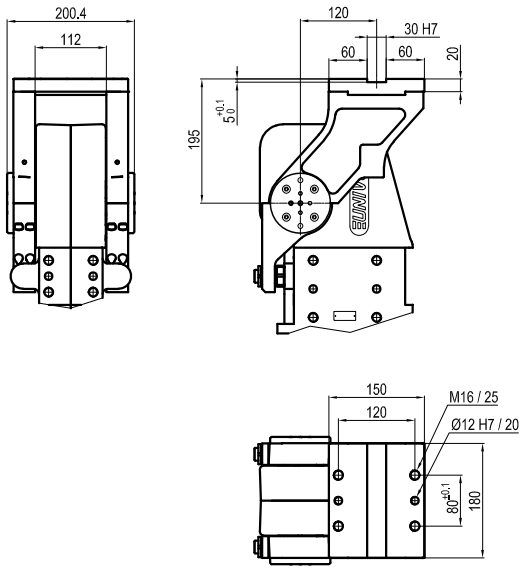

V Vertical 180°

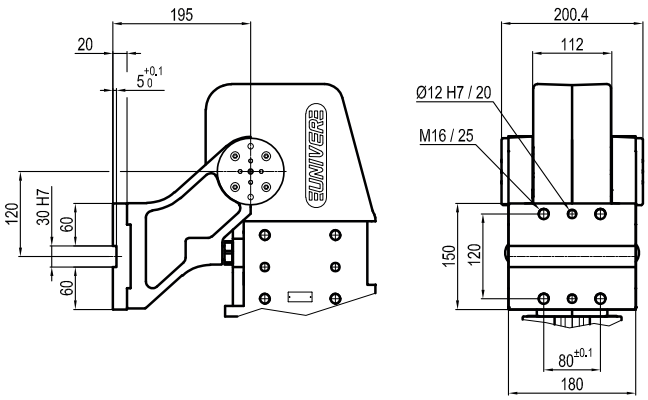

Z Vertical
Mirror of "V" position

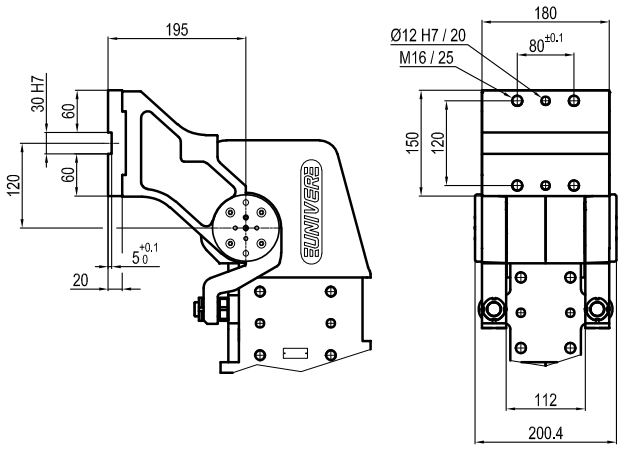

UAGP 300

Pneumatic power pivot 300 Nm without brake

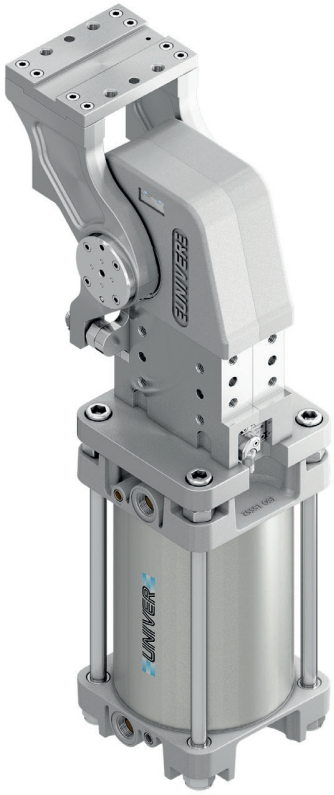

Pneumatic power pivot without brake typically used to rotate and dump fixtures and parts in a desired position.

- High repeatability
- Mechanical stops
- Integrated flow control system
- Double pneumatic cushioning
- Fixing ports on 4 sides
- Tapered roller bearings to support heavy load
- Orientable table in 4 pre-set positions
- Version with brake available

CHARACTERISTICS

Operating temperature	**5° ÷ 45° C**
Min./Max. Operating pressure	**0,4 / 0,6 MPa**
Bore Ø	**160 mm**
Pivot rotation	**45°/60°/90°/120°**
Holding moment	**6000 Nm**
Max. torque at rotary table (0,55MPa)	**300 Nm**
Weight	**33,3 Kg**
Pneumatic supply ports	**G3/4**
Sensor	**electronic (optical)**
Supply voltage	**10 ÷ 30 Vdc**
IP code	**IP 65**

OPTICAL SENSOR

FLOW CONTROL SYSTEM

HIGH REPEATABILITY

CODIFICATION KEY

UAG	P	300	**O**	K	**090**	W	**S**	0	
1	2	3	4	5	6	7	8	9	10

1 SERIES
UAG = UNICLAMP Power pivot

2 VERSION
P = Pneumatic

3 SIZE
300 = 300 Nm Ø 160 mm

4 TABLE POSITION
O = Horizontal 90°
P = Horizontal mirror of "**O**"*
V = Vertical 180°
Z = Vertical mirror of "**V**"
*Max opening angle 60°

5 SENSOR
N = No sensor (with protection plate)
K = Electronic sensor PNP, M12 (DF-K)
Y = Electronic sensor PNP, M12 (DF-Y) white LED
J = Electronic sensor NPN, M12 (DF-J)

6 PIVOT ROTATION
120 = 120°
090 = 90°
060 = 60°
045 = 45°

7 BRAKE SYSTEM
W = Without brake

8 CONNECTIONS
S = Left side (Standard)
D = Right side
F = Front side
P = Rear side

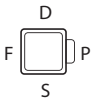

9 PRODUCT REVISION
Assigned by UNIVER

10 ATEX
X = ATEX option
See ATEX Catalogue for types and versions

O | Horizontal 90°

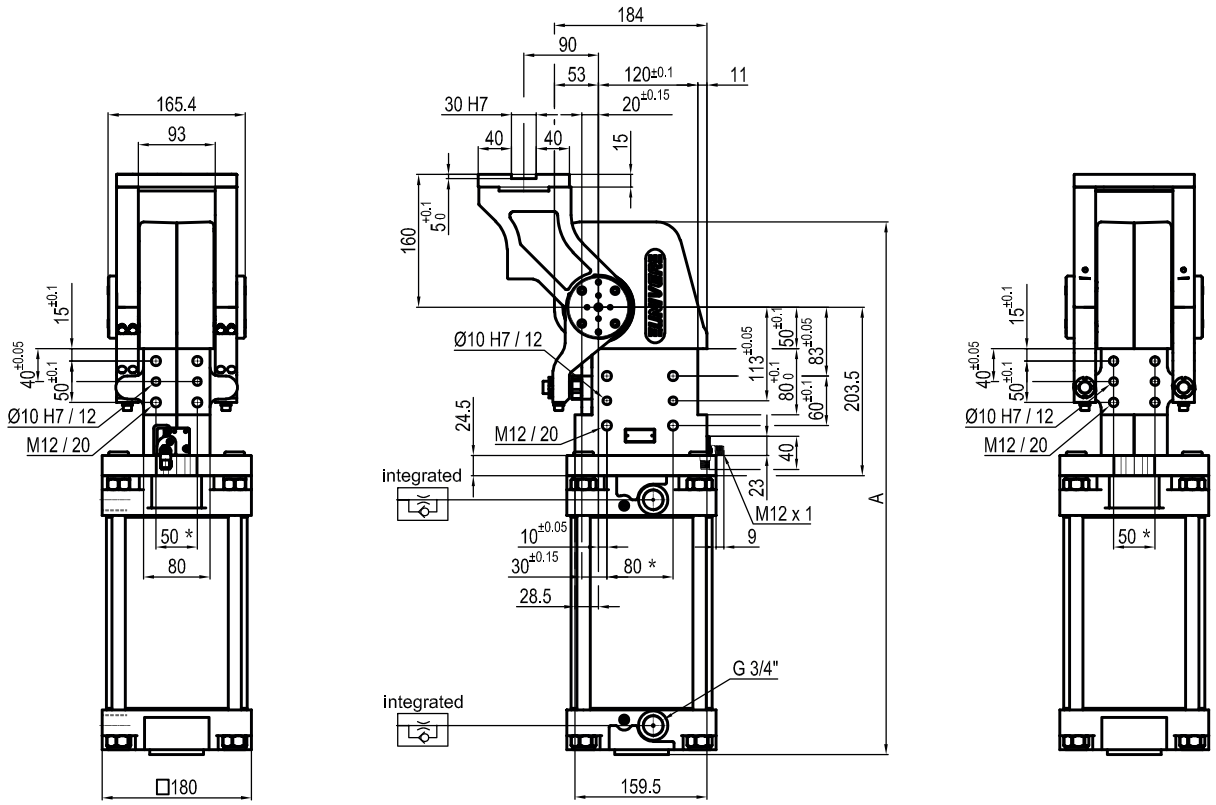

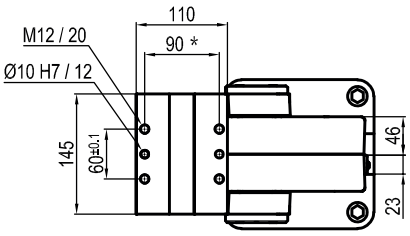

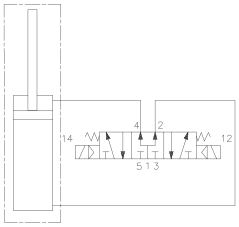

Pivot rotation (°)	**A**
45°	564
60°	578
90°	609
120°	643

**TOLERANCE BETWEEN DOWELS ± 0,02 BETWEEN SCREW HOLES ± 0,1*

Sensors

Electronic (optical)

DF-K PNP M12
DF-J NPN M12
DF-Y PNP M12 White LED

P Horizontal

Mirror of "O" position

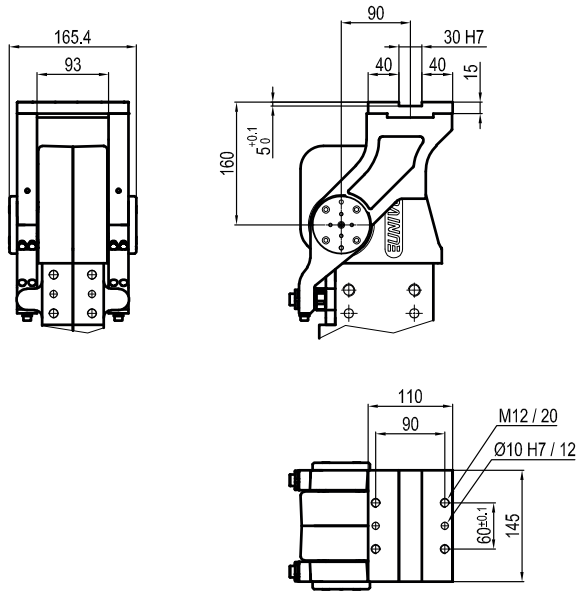

V Vertical 180°

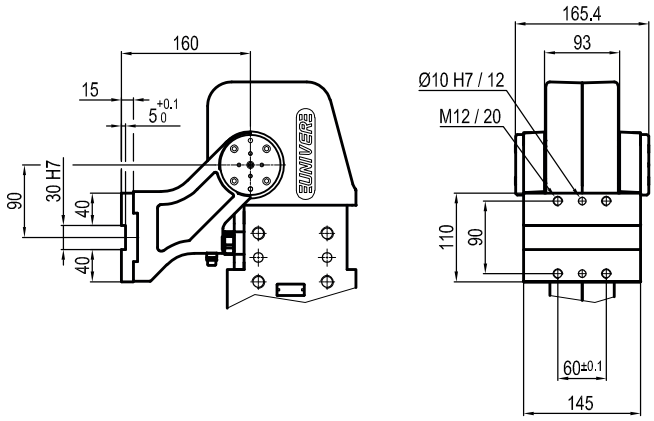

Z Vertical

Mirror of "V" position

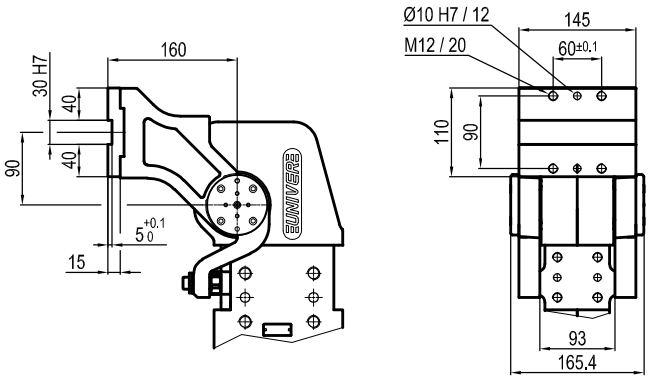

UAGP 350

Pneumatic power pivot 350 Nm without brake

Pneumatic power pivot without brake typically used to rotate and dump fixtures and parts in a desired position.

- High repeatability
- Mechanical stops
- Integrated flow control system
- Double pneumatic cushioning
- Fixing ports on 4 sides
- Tapered roller bearings to support heavy load
- Orientable table in 4 pre-set positions
- Version with brake available

CHARACTERISTICS

Operating temperature	**5° ÷ 45° C**
Min./Max. Operating pressure	**0,4 / 0,6 MPa**
Bore Ø	**160 mm**
Pivot rotation	**45°/60°/90°/120°**
Holding moment	**8000 Nm**
Max. torque at rotary table (0,55MPa)	**350 Nm**
Weight	**50 Kg**
Pneumatic supply ports	**G3/4**
Sensor	**electronic (optical)**
Supply voltage	**10 ÷ 30 Vdc**
IP code	**IP 65**

OPTICAL SENSOR

FLOW CONTROL SYSTEM

HIGH REPEATABILITY

CODIFICATION KEY

UAG	P	350	**O**	K	**090**	W	**S**	0	
1	2	3	4	5	6	7	8	9	10

1 SERIES
UAG = UNICLAMP Power pivot

2 VERSION
P = Pneumatic

3 SIZE
350 = 350 Nm Ø 160 mm

4 TABLE POSITION
O = Horizontal 90°
P = Horizontal mirror of "O"*
V = Vertical 180°
Z = Vertical mirror of "V"
*Max opening angle 60°

5 SENSOR
N = No sensor (with protection plate)
K = Electronic sensor PNP, M12 (DF-K)
Y = Electronic sensor PNP, M12 (DF-Y) white LED
J = Electronic sensor NPN, M12 (DF-J)

6 PIVOT ROTATION
120 = 120°
090 = 90°
060 = 60°
045 = 45°

7 BRAKE SYSTEM
W = Without brake

8 CONNECTIONS
S = Left side (Standard)
D = Right side
F = Front side
P = Rear side

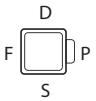

9 PRODUCT REVISION
Assigned by UNIVER

10 ATEX
X = ATEX option
See ATEX Catalogue for types and versions

O | Horizontal 90°

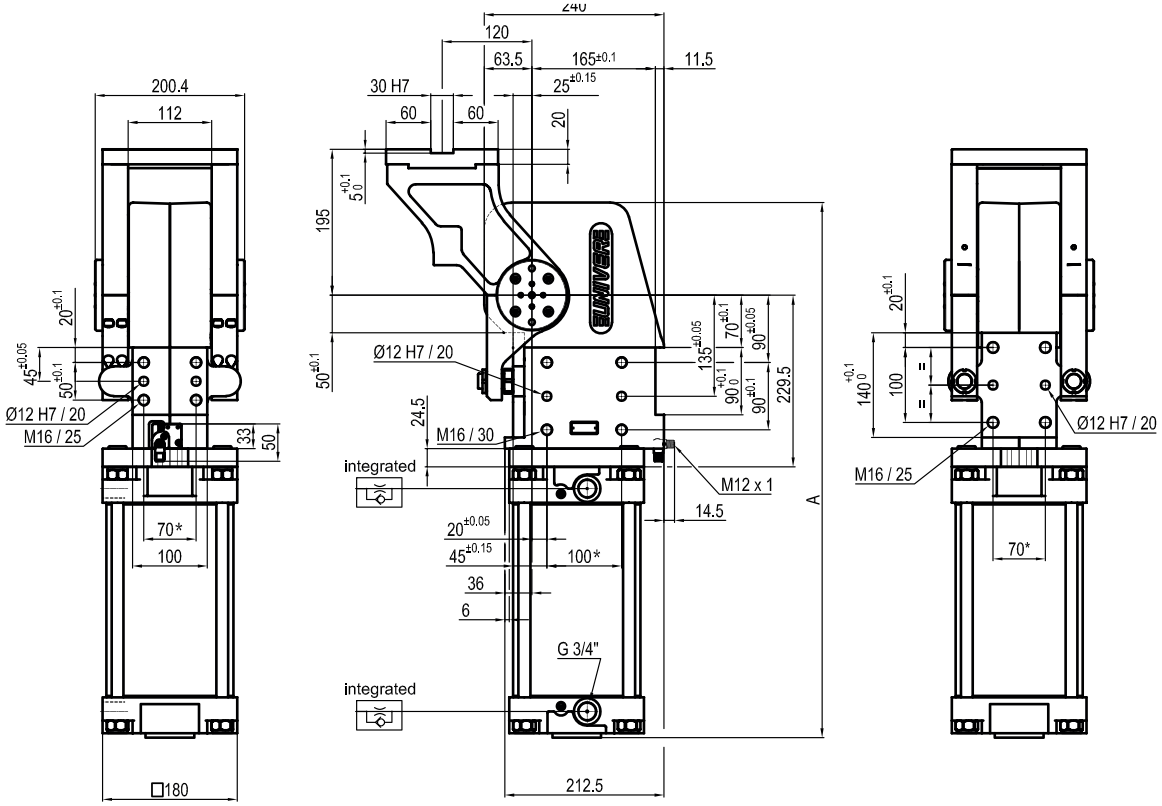

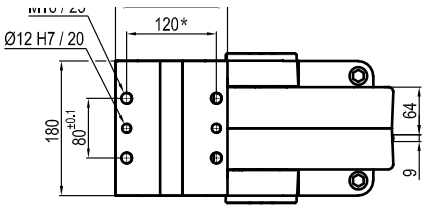

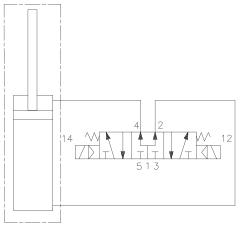

Pivot rotation (°)	A
45°	622.5
60°	638.5
90°	675.5
120°	715.5

**TOLERANCE BETWEEN DOWELS ± 0,02 BETWEEN SCREW HOLES ± 0,1*

Sensors

Electronic (optical)

DF-K PNP M12
DF-J NPN M12
DF-Y PNP M12 White LED

P Horizontal
Mirror of "**O**" position

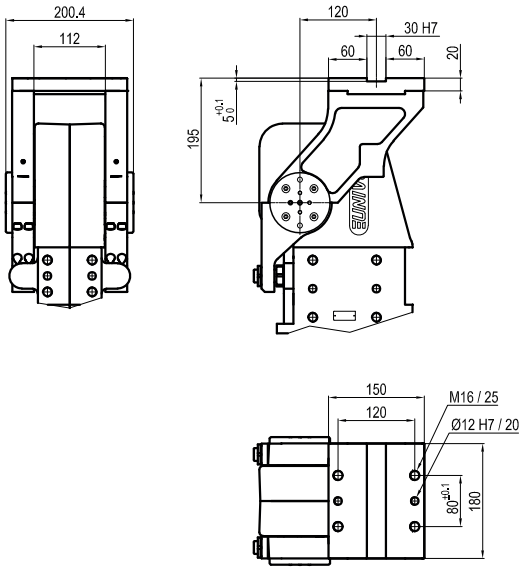

V Vertical 180°

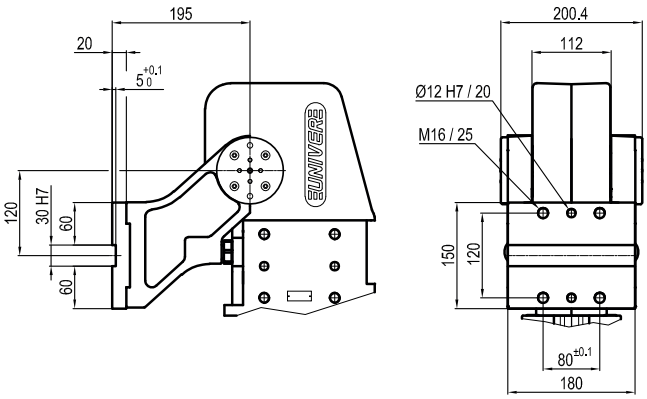

Z Vertical
Mirror of "**V**" position

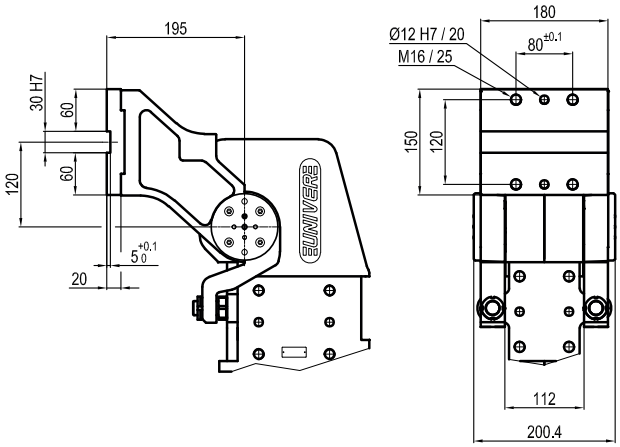

UAGP 355

Pneumatic power pivot 350 Nm without brake

Pneumatic power pivot without brake typically used to rotate and dump fixtures and parts in a desired position.

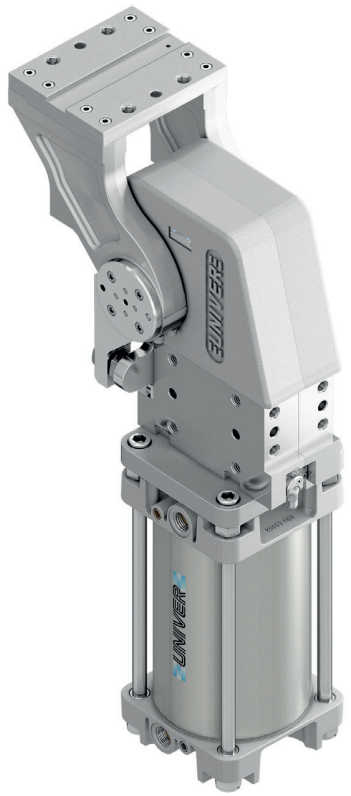

- High repeatability
- Mechanical stops
- Integrated flow control system
- Double pneumatic cushioning
- Fixing ports on 4 sides
- Tapered roller bearings to support heavy load
- Orientable table in 4 pre-set positions
- Version with brake available

CHARACTERISTICS

Operating temperature	**5° ÷ 45° C**
Min./Max. Operating pressure	**0,4 / 0,6 MPa**
Bore Ø	**160 mm**
Pivot rotation	**45°/60°/90°/120°**
Holding moment	**8000 Nm**
Max. torque at rotary table (0,55MPa)	**350 Nm**
Weight	**50 Kg**
Pneumatic supply ports	**G3/4**
Sensor	**electronic (optical)**
Supply voltage	**10 ÷ 30 Vdc**
IP code	**IP 65**

OPTICAL SENSOR

FLOW CONTROL SYSTEM

HIGH REPEATABILITY

CODIFICATION KEY

UAG	P	355	**O**	K	**090**	W	**S**	0	
1	2	3	4	5	6	7	8	9	10

1 SERIES
UAG = UNICLAMP Power pivot

2 VERSION
P = Pneumatic

3 SIZE
355 = 350 Nm Ø 160 mm

4 TABLE POSITION
O = Horizontal 90°
P = Horizontal mirror of "O"*
V = Vertical 180°
Z = Vertical mirror of "V"
*Max opening angle 60°

5 SENSOR
N = No sensor (with protection plate)
K = Electronic sensor PNP, M12 (DF-K)
Y = Electronic sensor PNP, M12 (DF-Y) white LED
J = Electronic sensor NPN, M12 (DF-J)

6 PIVOT ROTATION
120 = 120°
090 = 90°
060 = 60°
045 = 45°

7 BRAKE SYSTEM
W = Without brake

8 CONNECTIONS
S = Left side (Standard)
D = Right side
F = Front side
P = Rear side

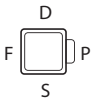

9 PRODUCT REVISION
Assigned by UNIVER

10 ATEX
X = ATEX option
See ATEX Catalogue for types and versions

O | Horizontal 90°

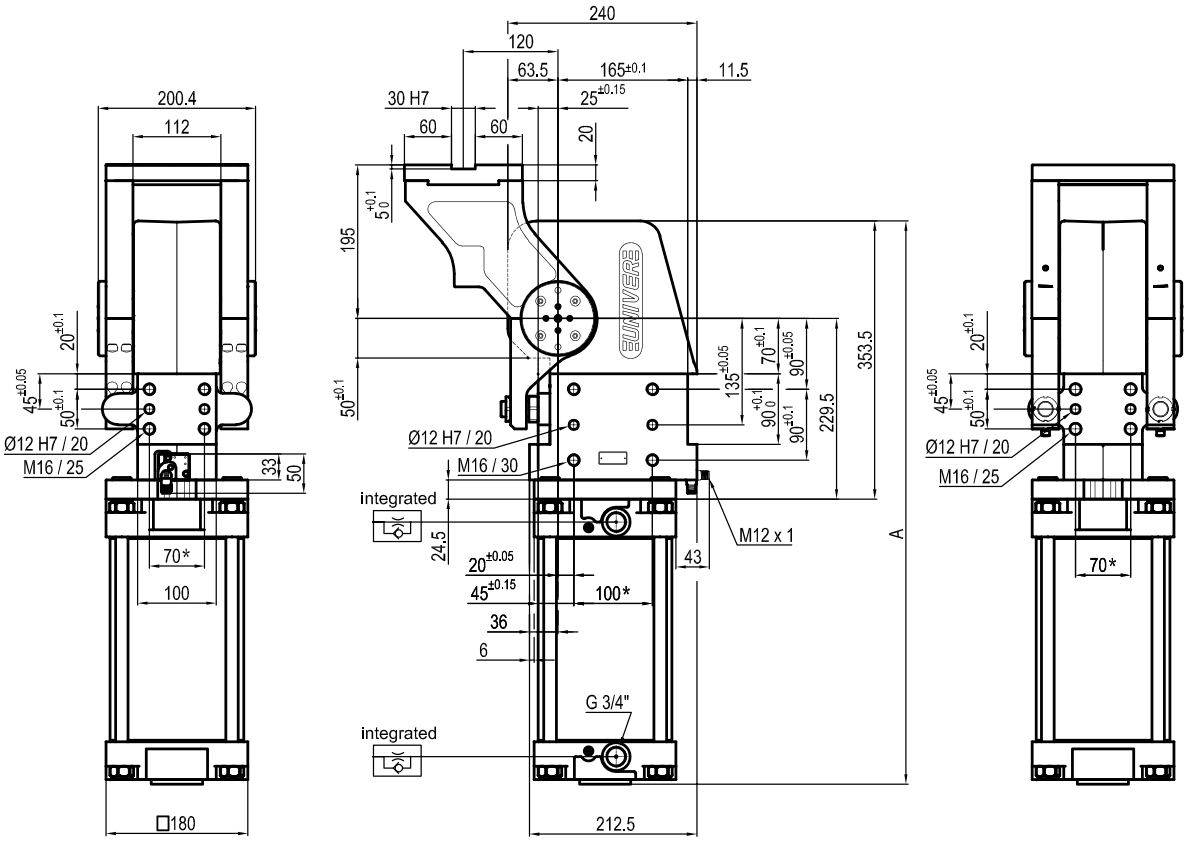

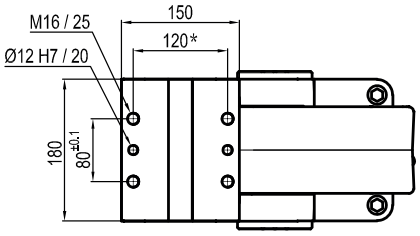

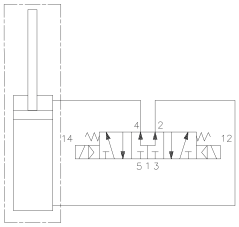

Pivot rotation (°)	**A**
45°	622.5
60°	638.5
90°	675.5
120°	715.5

**TOLERANCE BETWEEN DOWELS ± 0,02 BETWEEN SCREW HOLES ± 0,1*

Sensors

Electronic (optical)

DF-K PNP M12
DF-J NPN M12
DF-Y PNP M12 White LED

P Horizontal
Mirror of "O" position

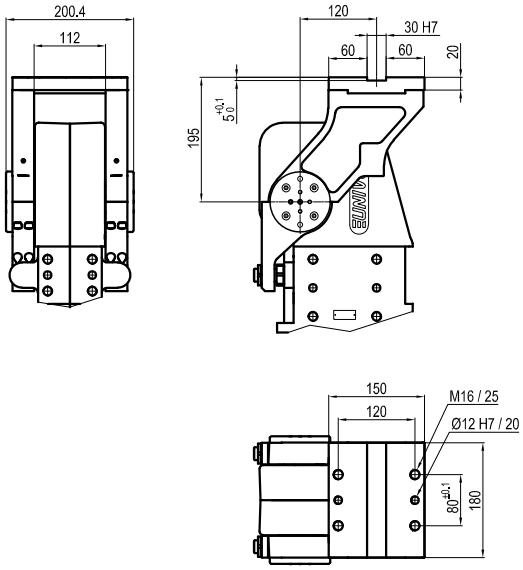

V Vertical 180°

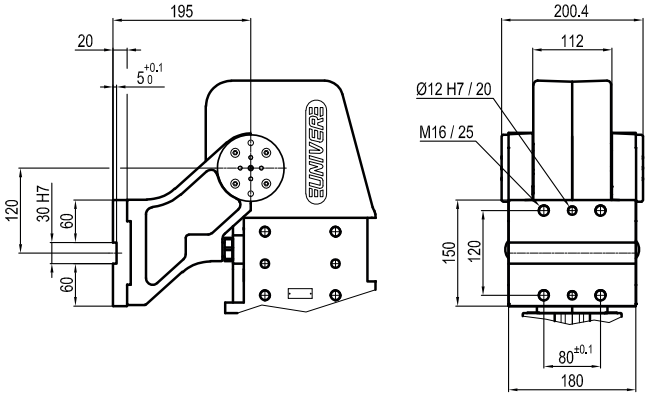

Z Vertical
Mirror of "V" position

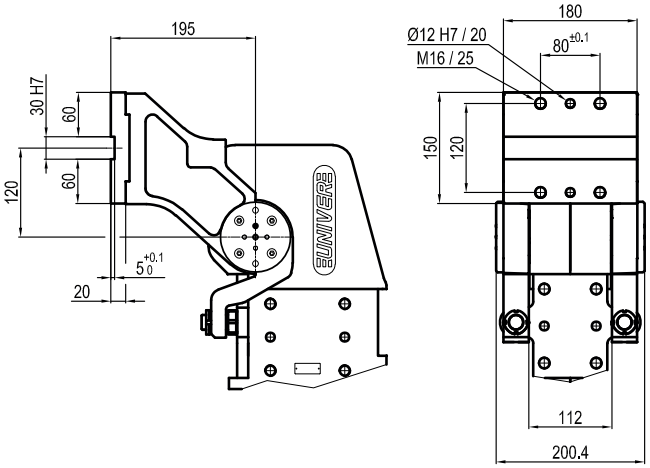

UAGP 600

Pneumatic power pivot 600 Nm without brake

Pneumatic power pivot without brake typically used to rotate and dump fixtures and parts in a desired position.

- High repeatability
- Mechanical stops
- Integrated flow control system
- Double pneumatic cushioning
- Fixing ports on 4 sides
- Tapered roller bearings to support heavy load
- Orientable table in 4 pre-set positions
- Version with brake available

CHARACTERISTICS

Operating temperature	**5° ÷ 45° C**
Min./Max. Operating pressure	**0,4 / 0,6 MPa**
Bore Ø	**200 mm**
Pivot rotation	**45°/60°/90°/120°**
Holding moment	**8000 Nm**
Max. torque at rotary table (0,55MPa)	**600 Nm**
Weight	**53,8 Kg**
Pneumatic supply ports	**G3/4**
Sensor	**electronic (optical)**
Supply voltage	**10 ÷ 30 Vdc**
IP code	**IP 65**

OPTICAL SENSOR

FLOW CONTROL SYSTEM

HIGH REPEATABILITY

CODIFICATION KEY

UAG	P	600	**O**	K	**090**	W	**S**	0	
1	2	3	4	5	6	7	8	9	10

1 SERIES
UAG = UNICLAMP Power pivot

2 VERSION
P = Pneumatic

3 SIZE
600 = 600 Nm Ø 200 mm

4 TABLE POSITION
O = Horizontal 90°
P = Horizontal mirror of "**O**"*
V = Vertical 180°
Z = Vertical mirror of "**V**"
*Max opening angle 60°

5 SENSOR
N = No sensor (with protection plate)
K = Electronic sensor PNP, M12 (DF-K)
Y = Electronic sensor PNP, M12 (DF-Y) white LED
J = Electronic sensor NPN, M12 (DF-J)

6 PIVOT ROTATION
120 = 120°
090 = 90°
060 = 60°
045 = 45°

7 BRAKE SYSTEM
W = Without brake

8 CONNECTIONS
S = Left side (Standard)
D = Right side
F = Front side
P = Rear side

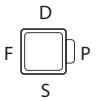

9 PRODUCT REVISION
Assigned by UNIVER

10 ATEX
X = ATEX option
See ATEX Catalogue for types and versions

O | Horizontal 90°

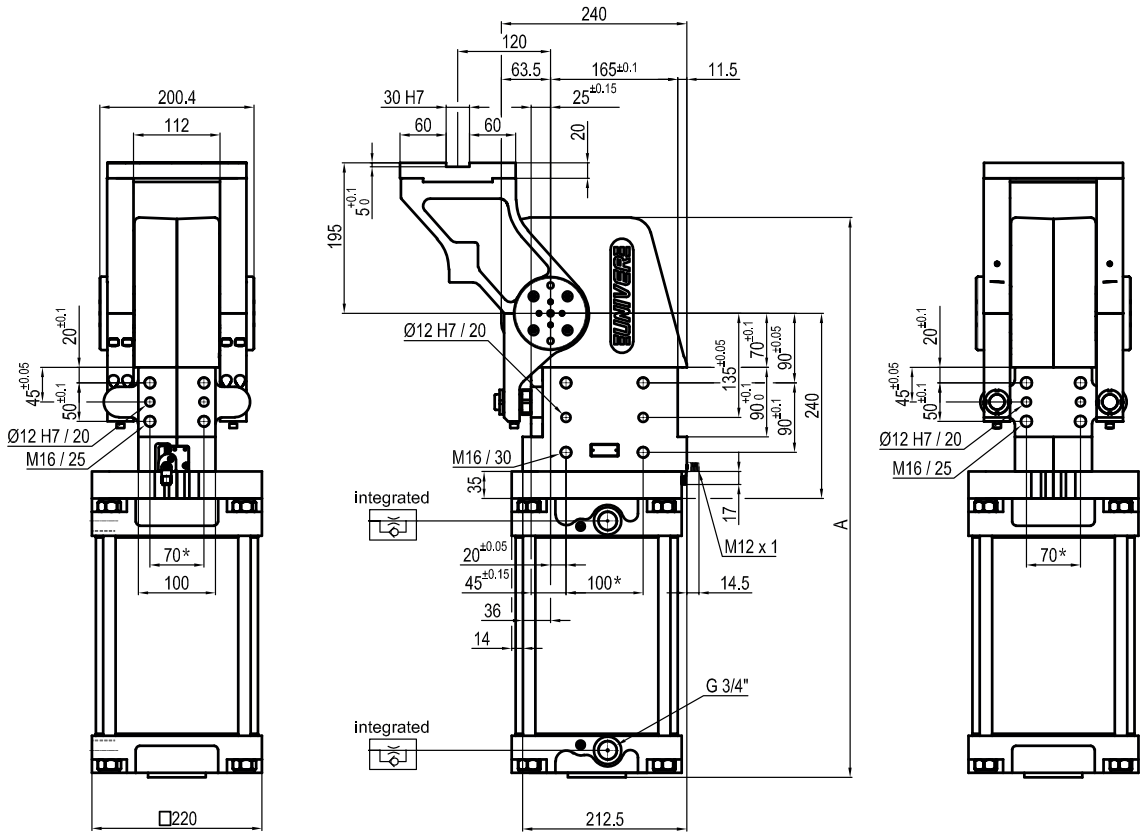

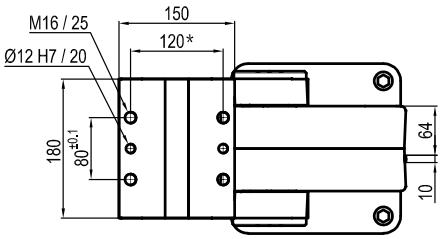

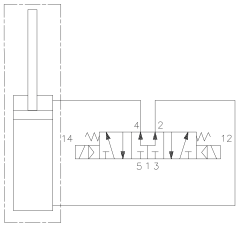

Pivot rotation (°)	**A**
45°	633
60°	649
90°	686
120°	725

**TOLERANCE BETWEEN DOWELS ± 0,02 BETWEEN SCREW HOLES ± 0,1*

Sensors

Electronic (optical)

DF-K PNP M12
DF-J NPN M12
DF-Y PNP M12 White LED

P Horizontal
Mirror of "**O**" position

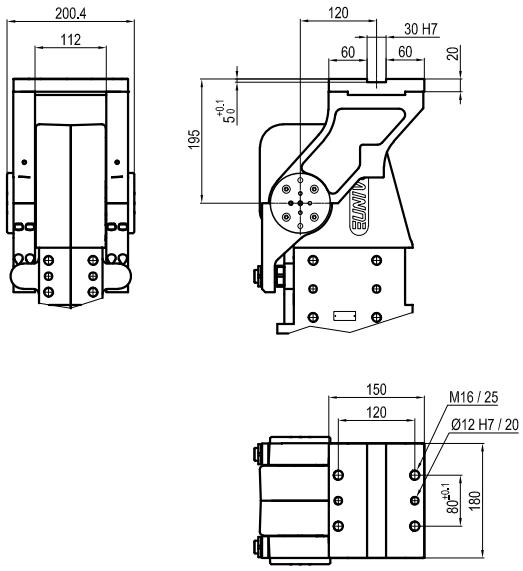

V Vertical 180°

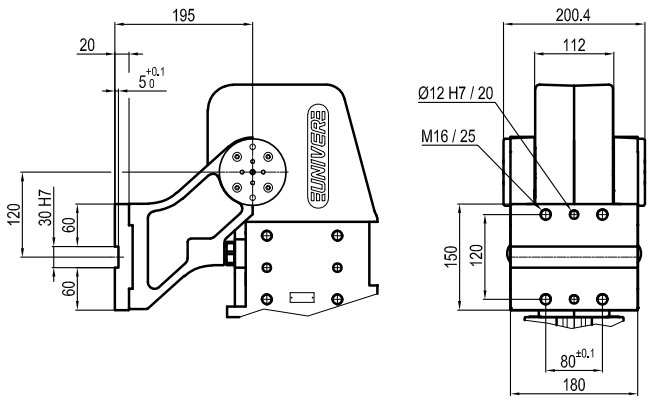

Z Vertical
Mirror of "**V**" position

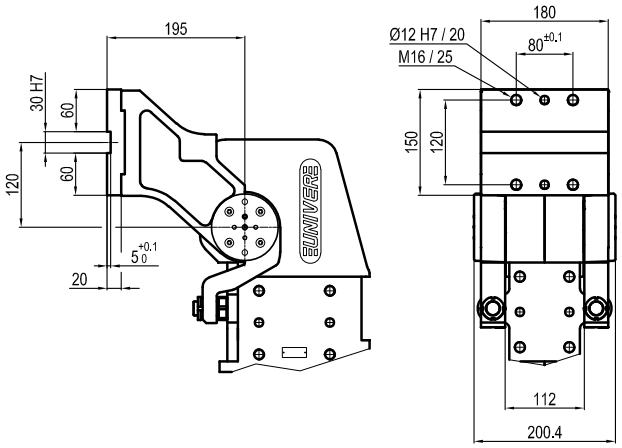

UAGP 605

Pneumatic power pivot 600 Nm without brake

Pneumatic power pivot without brake typically used to rotate and dump fixtures and parts in a desired position.

- High repeatability
- Mechanical stops
- Integrated flow control system
- Double pneumatic cushioning
- Fixing ports on 4 sides
- Tapered roller bearings to support heavy load
- Orientable table in 4 pre-set positions
- Version with brake available

CHARACTERISTICS

Operating temperature	**5° ÷ 45° C**
Min./Max. Operating pressure	**0,4 / 0,6 MPa**
Bore Ø	**200 mm**
Pivot rotation	**45°/60°/90°/120°**
Holding moment	**8000 Nm**
Max. torque at rotary table (0,55MPa)	**600 Nm**
Weight	**54 Kg**
Pneumatic supply ports	**G3/4**
Sensor	**electronic (optical)**
Supply voltage	**10 ÷ 30 Vdc**
IP code	**IP 65**

OPTICAL SENSOR

FLOW CONTROL SYSTEM

HIGH REPEATABILITY

CODIFICATION KEY

UAG	P	605	**O**	K	**090**	W	**S**	0	
1	2	3	4	5	6	7	8	9	10

1 SERIES
UAG = UNICLAMP Power pivot

2 VERSION
P = Pneumatic

3 SIZE
605 = 600 Nm Ø 200 mm

4 TABLE POSITION
O = Horizontal 90°
P = Horizontal mirror of "**O**"*
V = Vertical 180°
Z = Vertical mirror of "**V**"
*Max opening angle 60°

5 SENSOR
N = No sensor (with protection plate)
K = Electronic sensor PNP, M12 (DF-K)
Y = Electronic sensor PNP, M12 (DF-Y) white LED
J = Electronic sensor NPN, M12 (DF-J)

6 PIVOT ROTATION
120 = 120°
090 = 90°
060 = 60°
045 = 45°

7 BRAKE SYSTEM
W = Without brake

8 CONNECTIONS
S = Left side (Standard)
D = Right side
F = Front side
P = Rear side

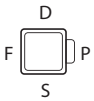

9 PRODUCT REVISION
Assigned by UNIVER

10 ATEX
X = ATEX option
See ATEX Catalogue for types and versions

O | Horizontal 90°

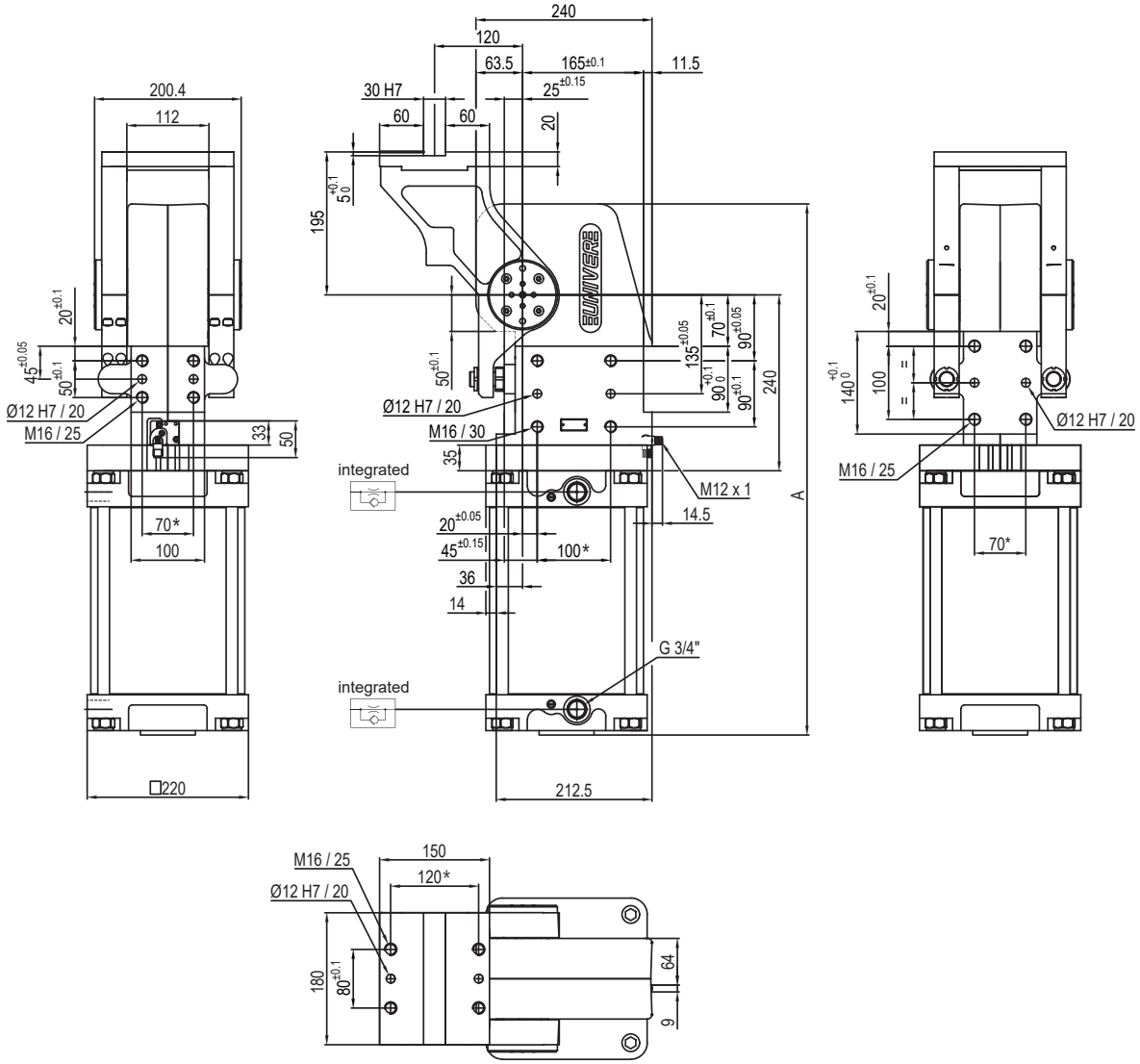

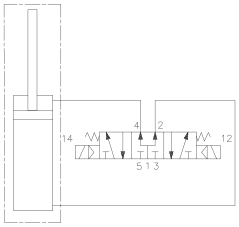

Pivot rotation (°)	**A**
45°	633
60°	649
90°	686
120°	725

**TOLERANCE BETWEEN DOWELS ± 0,02 BETWEEN SCREW HOLES ± 0,1*

Sensors

Electronic (optical)

DF-K PNP M12
DF-J NPN M12
DF-Y PNP M12 White LED

P Horizontal
Mirror of "**O**" position

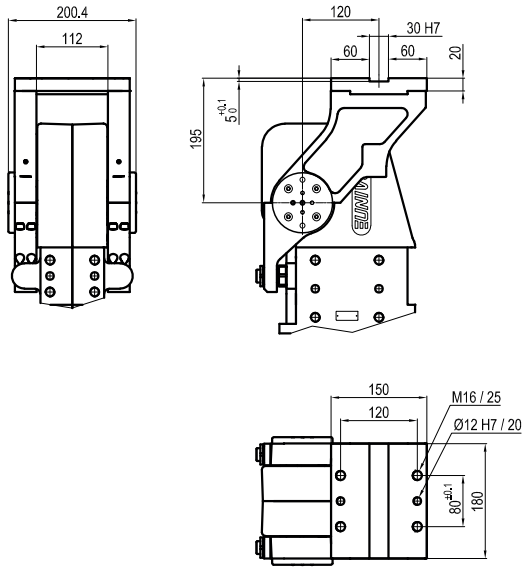

V Vertical 180°

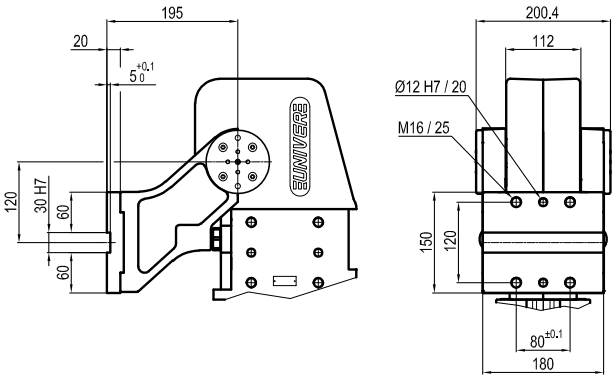

Z Vertical
Mirror of "**V**" position

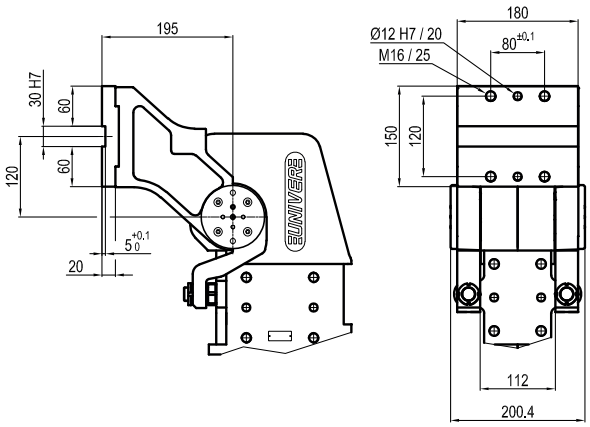

UAGP 063

Pneumatic power pivot 16 Nm with brake

Pneumatic power pivot with brake typically used to rotate and dump fixtures and parts in a desired position.

- High repeatability
- Mechanical stops
- Double pneumatic cushioning
- Fixing ports on 4 sides
- Roller bearings to support heavy load
- Orientable table in 4 pre-set positions

CHARACTERISTICS

Operating temperature	**5° ÷ 45° C**
Min./Max. Operating pressure	**0,4 / 0,6 MPa**
Bore Ø	**63 mm**
Pivot rotation	**45°/60°/ 90°/120°**
Holding moment	**1500 Nm**
Max. torque at rotary table (0,55MPa)	**16 Nm**
Weight	**5,5 kg**
Pneumatic supply ports	**G1/4**
Body sensor	**electronic (optical)**
Brake sensor	**electronic**
Supply voltage	**10 ÷ 30 Vdc**
IP code	**IP 65**

OPTICAL SENSOR

HIGH REPEATABILITY

CODIFICATION KEY

UAG	P	063	**O**	K	**090**	B	0
1	2	3	4	5	6	7	8	9

1 SERIES
UAG = UNICLAMP Power pivot

2 VERSION
P = Pneumatic

3 SIZE
063 = 16 Nm Ø 63 mm

4 TABLE POSITION
O = Horizontal 90° *
P = Horizontal mirror of "O" **
V = Vertical 180°
Z = Vertical mirror of "V"

*Max opening angle 90°
**Max opening angle 60°

5 SENSOR
N = No sensor (with protection plate)
K = Electronic sensor PNP, M12 (DF-K)
Y = Electronic sensor PNP, M12 (DF-Y) white LED
J = Electronic sensor NPN, M12 (DF-J)

6 PIVOT ROTATION
120 = 120°
090 = 90°
060 = 60°
045 = 45°

7 BRAKE SYSTEM
B = With brake

8 PRODUCT REVISION
Assigned by UNIVER

9 ATEX
X = ATEX option
See ATEX Catalogue for types and versions

O | Horizontal 90°

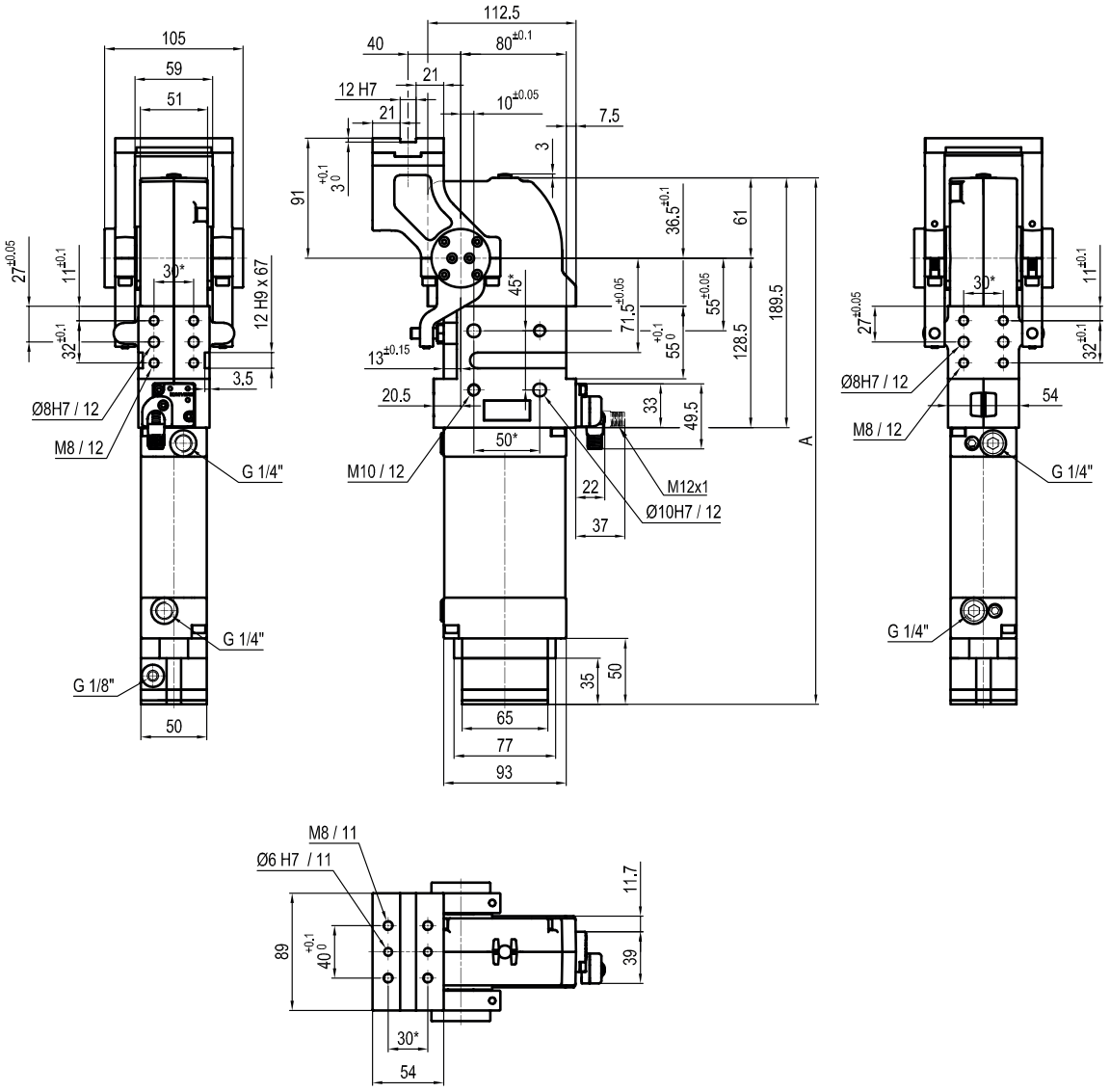

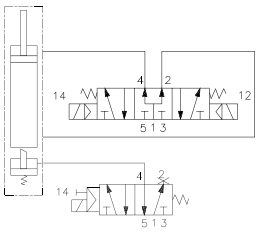

Pivot rotation (°)	A
45°	357.5
60°	565.5
90°	383
120°*	399.5

**TOLERANCE BETWEEN DOWELS ± 0,02 BETWEEN SCREW HOLES ± 0,1*

** ONLY FOR TABLE POSITION "V" AND "Z"*

Sensors

Body

Electronic (optical)

DF-K PNP M12
DF-J NPN M12
DF-Y PNP M12 White LED

P Horizontal
Mirror of "O" position

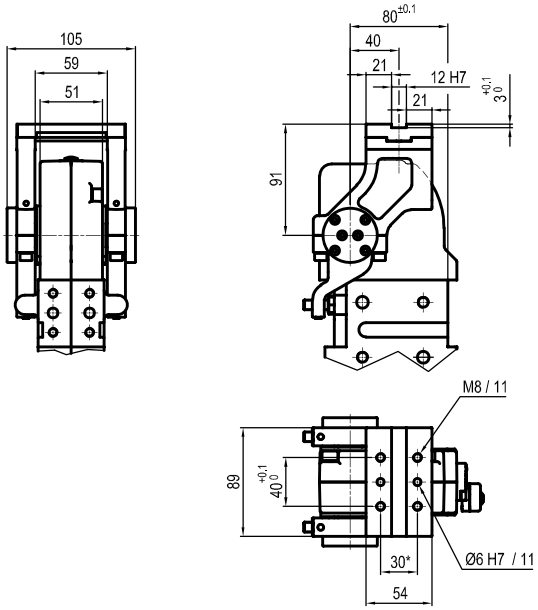

V Vertical 180°

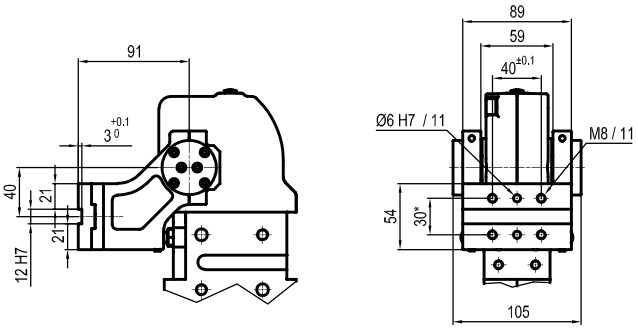

Z Vertical
Mirror of "V" position

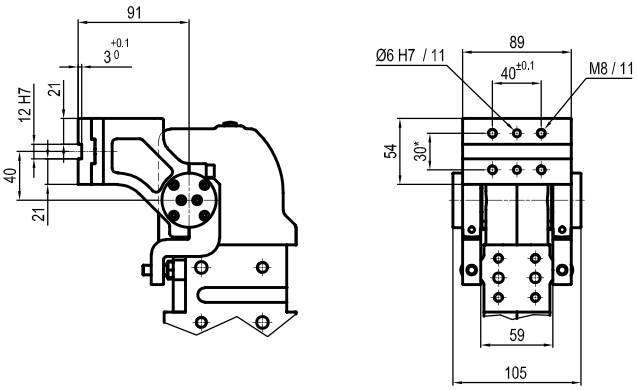

UAGP 075

Pneumatic power pivot 75 Nm with brake

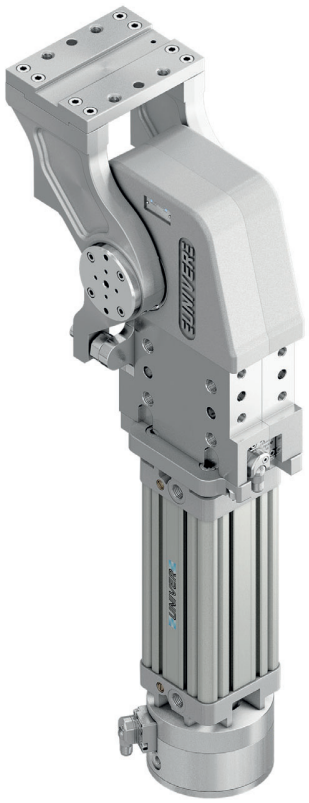

Pneumatic power pivot with brake typically used to rotate and dump fixtures and parts in a desired position.

- High repeatability
- Mechanical stops
- Integrated flow control system
- Double pneumatic cushioning
- Fixing ports on 4 sides
- Tapered roller bearings to support heavy load
- Orientable table in 4 pre-set positions
- Version with sensor on the brake available

CHARACTERISTICS

Operating temperature	**5° ÷ 45° C**
Min./Max. Operating pressure	**0,4 / 0,6 MPa**
Bore Ø	**80 mm**
Pivot rotation	**45°/60°/ 90°/120°**
Holding moment	**6000 Nm**
Max. torque at rotary table (0,55MPa)	**75 Nm**
Weight	**24 kg**
Pneumatic supply ports	**G3/8**
Body sensor	**electronic (optical)**
Brake sensor	**electronic**
Supply voltage	**10 ÷ 30 Vdc**
IP code	**IP 65**

OPTICAL SENSOR

FLOW CONTROL SYSTEM

HIGH REPEATABILITY

CODIFICATION KEY

UAG	P	075	O	A	090	B	S	0	
1	2	3	4	5	6	7	8	9	10

1 SERIES
UAG = UNICLAMP Power pivot

2 VERSION
P = Pneumatic

3 SIZE
075 = 75 Nm Ø 80 mm

4 TABLE POSITION
O = Horizontal 90°
P = Horizontal mirror of "O"*
V = Vertical 180°
Z = Vertical mirror of "V"
*Max opening angle 60°

5 SENSOR
N = No sensor (with protection plate)
K = Electronic sensor PNP, M12 (DF-K)
Y = Electronic sensor PNP, M12 (DF-Y) white LED
J = Electronic sensor NPN, M12 (DF-J)
A = Electronic sensor PNP, optical for opening angle, M12 (DF-K) + brake sensor (DF-S)

6 PIVOT ROTATION
120 = 120°
090 = 90°
060 = 60°
045 = 45°

7 BRAKE SYSTEM
B = With brake

8 CONNECTIONS
S = Left side (Standard)
D = Right side
F = Front side
P = Rear side

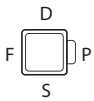

9 PRODUCT REVISION
Assigned by UNIVER

10 ATEX
X = ATEX option
See ATEX Catalogue for types and versions

O | Horizontal 90°

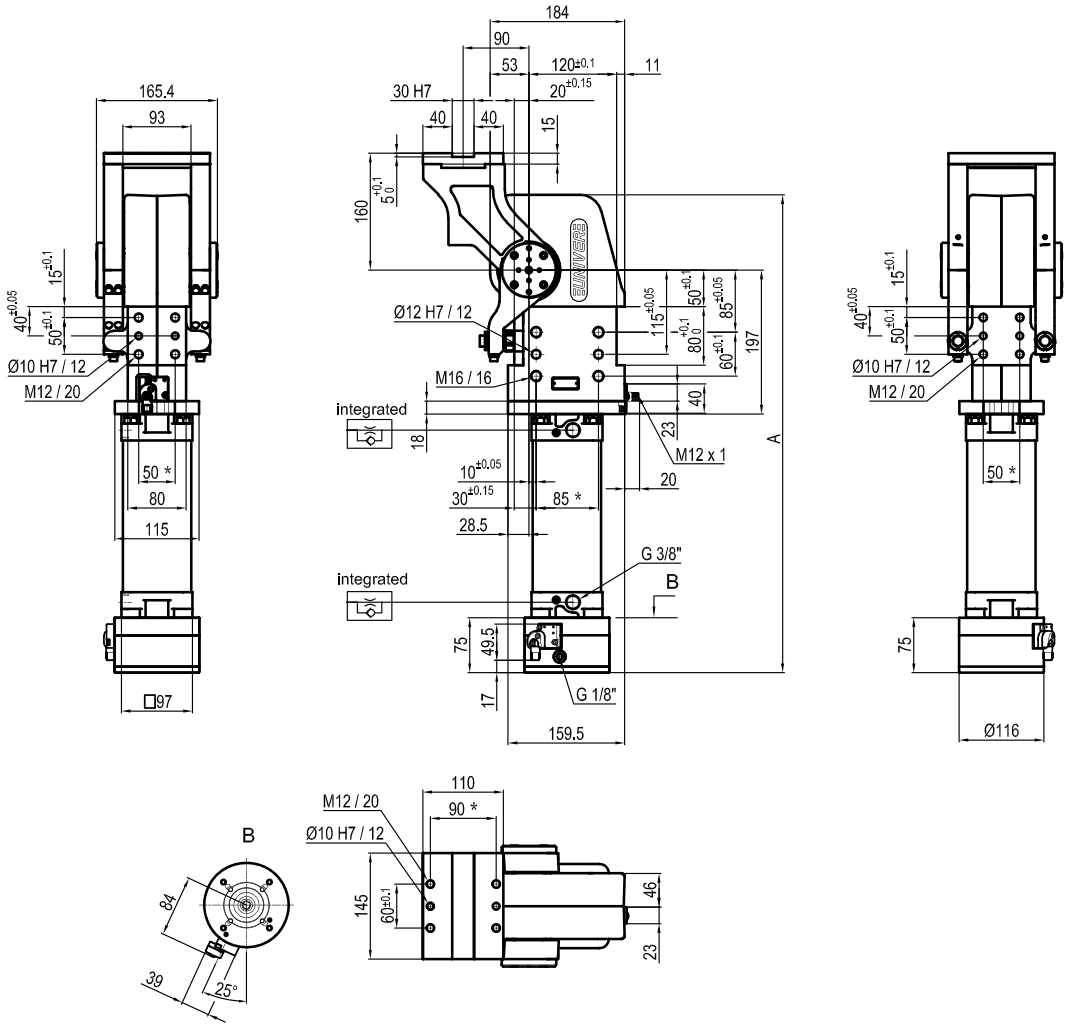

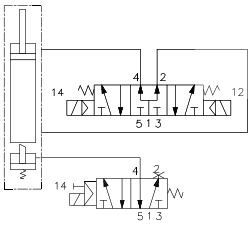

Pivot rotation (°)	A
45°	550
60°	561.5
90°	586.5
120°	611.5

**TOLERANCE BETWEEN DOWELS ± 0,02 BETWEEN SCREW HOLES ± 0,1*

Sensors

Body

Electronic (optical)

DF-K PNP M12
DF-J NPN M12
DF-Y PNP M12 White LED

Brake

Electronic

DF-S PNP M12

P Horizontal
Mirror of "**O**" position

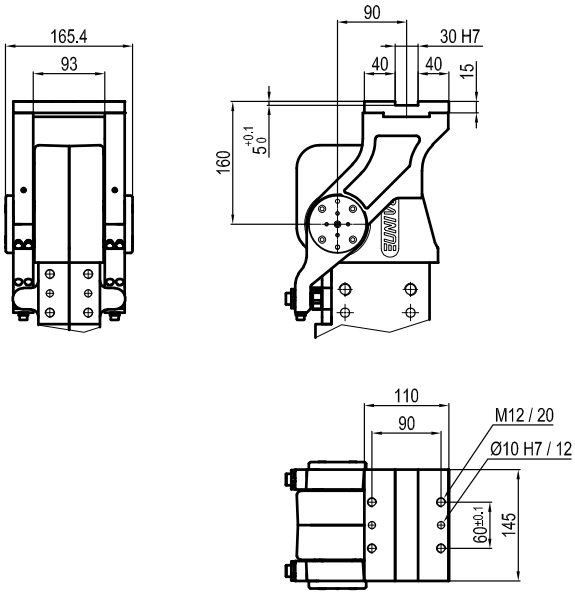

V Vertical 180°

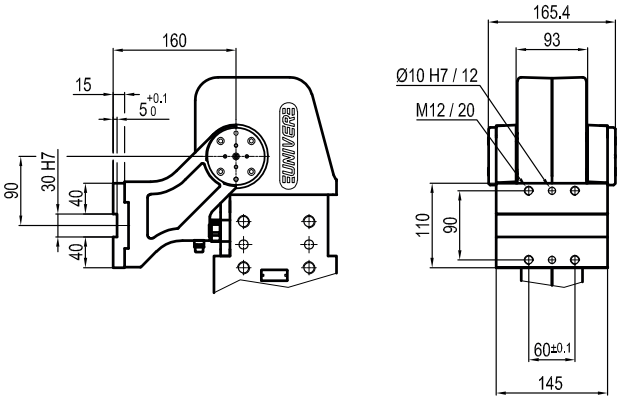

Z Vertical
Mirror of "**V**" position

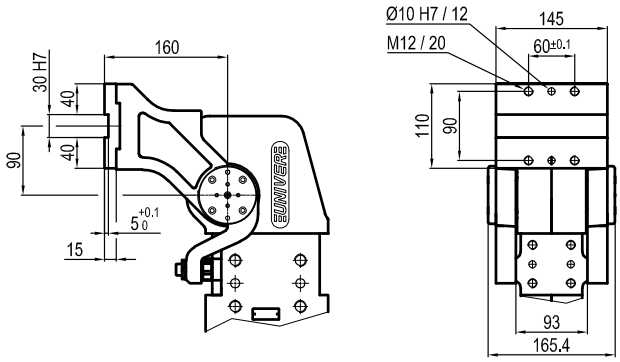

UAGP 080

Pneumatic power pivot 60 Nm with brake

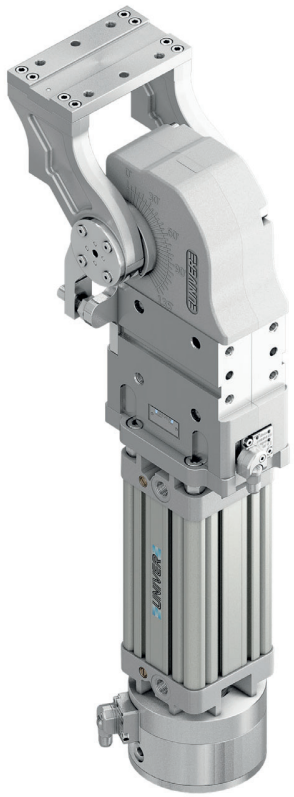

Pneumatic power pivot with brake typically used to rotate and dump fixtures and parts in a desired position.

- High repeatability
- Mechanical stops
- Integrated flow control system
- Double pneumatic cushioning
- Fixing ports on 4 sides
- Tapered roller bearings to support heavy load
- Orientable table in 4 pre-set positions
- Version with sensor on the brake available

CHARACTERISTICS

Operating temperature	**5° ÷ 45° C**
Min./Max. Operating pressure	**0,4 / 0,6 MPa**
Bore Ø	**80 mm**
Pivot rotation	**45°/60°/ 90°/120°**
Holding moment	**4000 Nm**
Max. torque at rotary table (0,55MPa)	**60 Nm**
Weight	**17 kg**
Pneumatic supply ports	**G3/8**
Body sensor	**electronic (optical)**
Brake sensor	**electronic**
Supply voltage	**10 ÷ 30 Vdc**
IP code	**IP 65**

OPTICAL SENSOR

FLOW CONTROL SYSTEM

HIGH REPEATABILITY

CODIFICATION KEY

UAG	P	080	O	A	090	B	S	0	
1	2	3	4	5	6	7	8	9	10

1 SERIES
UAG = UNICLAMP Power pivot

2 VERSION
P = Pneumatic

3 SIZE
080 = 60 Nm Ø 80 mm

4 TABLE POSITION
O = Horizontal 90°
P = Horizontal mirror of "O"*
V = Vertical 180°
Z = Vertical mirror of "V"
*Max opening angle 60°

5 SENSOR
N = No sensor (with protection plate)
K = Electronic sensor PNP, M12 (DF-K)
Y = Electronic sensor PNP, M12 (DF-Y) white LED
J = Electronic sensor NPN, M12 (DF-J)
A = Electronic sensor PNP, optical for opening angle, M12 (DF-K) + brake sensor (DF-S)

6 PIVOT ROTATION
120 = 120°
090 = 90°
060 = 60°
045 = 45°

7 BRAKE SYSTEM
B = With brake
M = With brake and manual unlock

8 CONNECTIONS
S = Left side (Standard)
D = Right side
F = Front side
P = Rear side

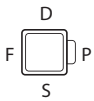

9 PRODUCT REVISION
Assigned by UNIVER

10 ATEX
X = ATEX option
See ATEX Catalogue for types and versions

O | Horizontal 90°

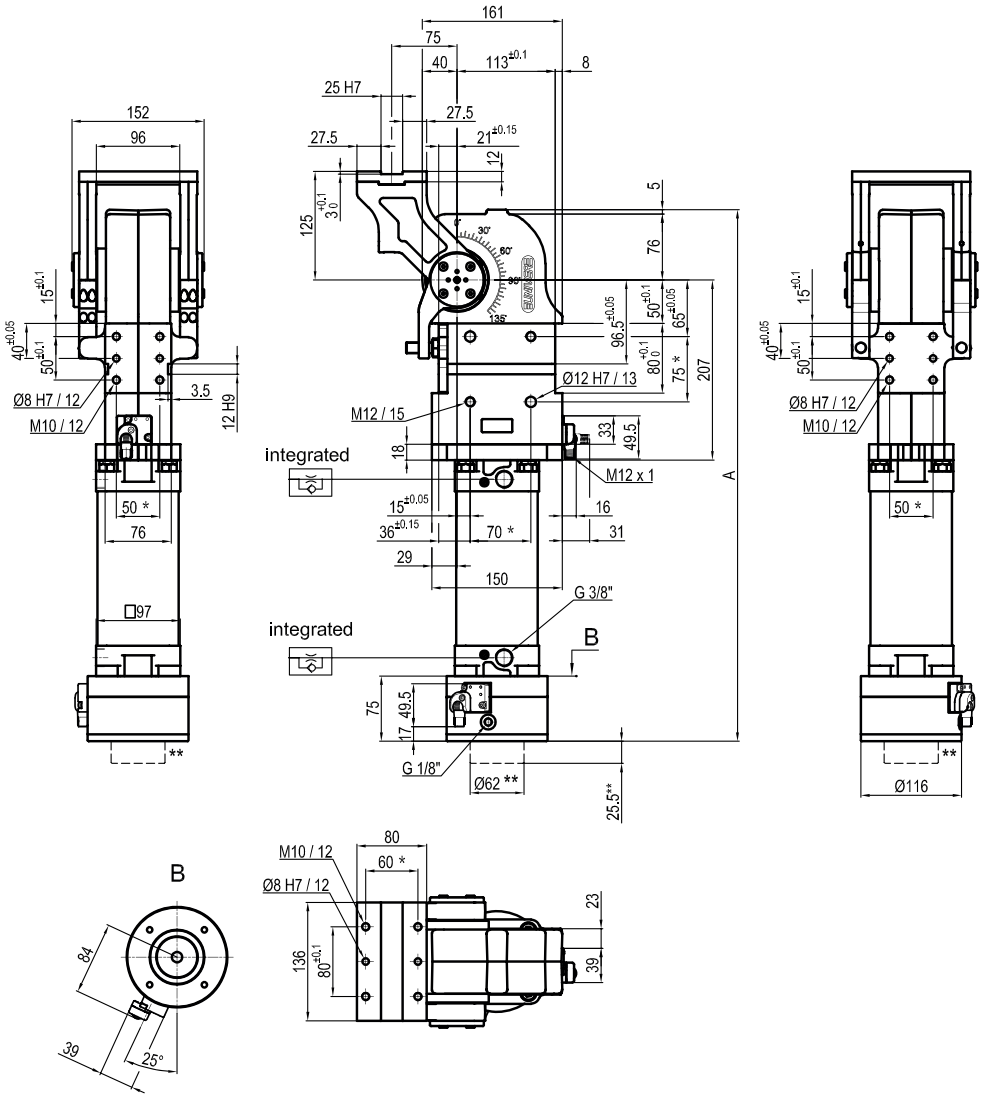

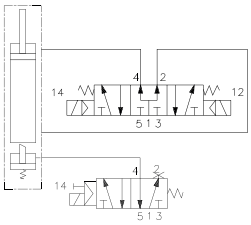

Pivot rotation (°)	A
45°	550
60°	561.5
90°	586.5
120°	611.5

**TOLERANCE BETWEEN DOWELS ± 0,02 BETWEEN SCREW HOLES ± 0,1*
***VERSION WITH BRAKE UNLOCK "M"*

Sensors

Body

Electronic (optical)

DF-K PNP M12
DF-J NPN M12
DF-Y PNP M12 White LED

Brake

Electronic

DF-S PNP M12

P Horizontal
Mirror of "O" position

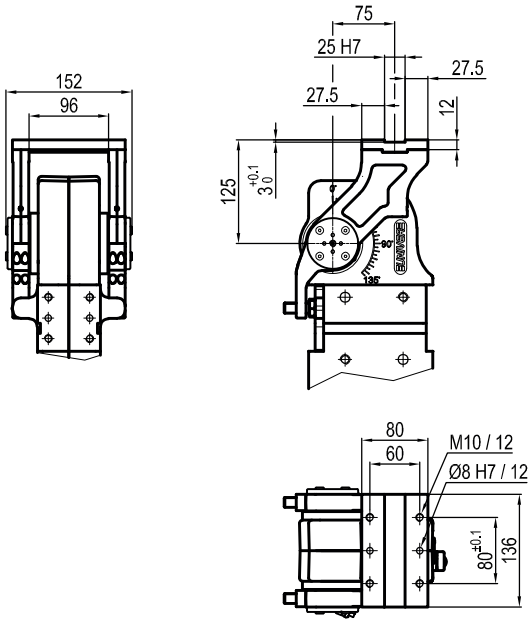

V Vertical 180°

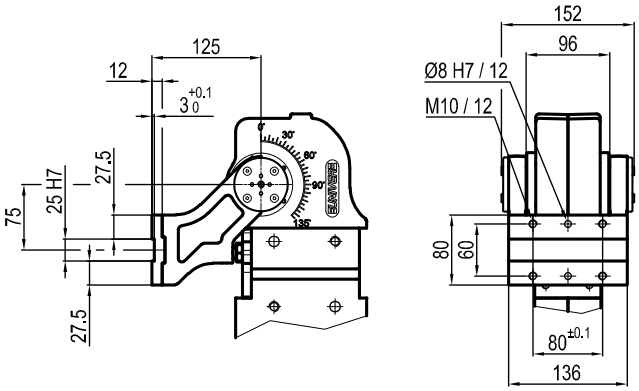

Z Vertical
Mirror of "V" position

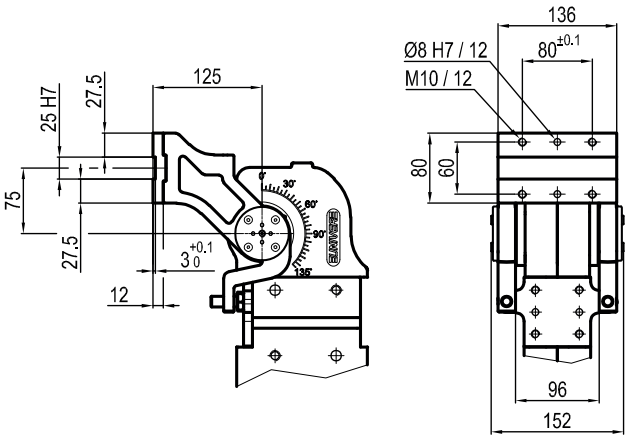

UAGP 120

Pneumatic power pivot 110 Nm with brake

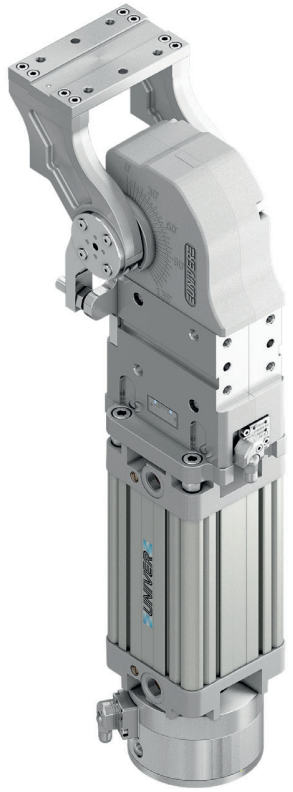

Pneumatic power pivot with brake typically used to rotate and dump fixtures and parts in a desired position.

- High repeatability
- Mechanical stops
- Integrated flow control system
- Double pneumatic cushioning
- Fixing ports on 4 sides
- Tapered roller bearings to support heavy load
- Orientable table in 4 pre-set positions
- Version with sensor on the brake available

CHARACTERISTICS

Operating temperature	**5° ÷ 45° C**
Min./Max. Operating pressure	**0,4 / 0,6 MPa**
Bore Ø	**100 mm**
Pivot rotation	**45°/60°/90°/120°**
Holding moment	**4000 Nm**
Max. torque at rotary table (0,55MPa)	**110 Nm**
Weight	**19 kg**
Pneumatic supply ports	**G1/2**
Body sensor	**electronic (optical)**
Brake sensor	**electronic**
Supply voltage	**10 ÷ 30 Vdc**
IP code	**IP 65**

OPTICAL SENSOR

FLOW CONTROL SYSTEM

HIGH REPEATABILITY

CODIFICATION KEY

UAG	P	120	O	A	090	B	S	0	
1	2	3	4	5	6	7	8	9	10

1 SERIES
UAG = UNICLAMP Power pivot

2 VERSION
P = Pneumatic

3 SIZE
120 = 110 Nm Ø 100 mm

4 TABLE POSITION
O = Horizontal 90°
P = Horizontal mirror of "O"*
V = Vertical 180°
Z = Vertical mirror of "V"
*Max opening angle 60°

5 SENSOR
N = No sensor (with protection plate)
K = Electronic sensor PNP, M12 (DF-K)
Y = Electronic sensor PNP, M12 (DF-Y) white LED
J = Electronic sensor NPN, M12 (DF-J)
A = Electronic sensor PNP, optical for opening angle, M12 (DF-K) + brake sensor (DF-S)

6 PIVOT ROTATION
120 = 120°
090 = 90°
060 = 60°
045 = 45°

7 BRAKE SYSTEM
B = With brake
M = With brake and manual unlock

8 CONNECTIONS
S = Left side (Standard)
D = Right side
F = Front side
P = Rear side

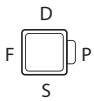

9 PRODUCT REVISION
Assigned by UNIVER

10 ATEX
X = ATEX option
See ATEX Catalogue for types and versions

O | Horizontal 90°

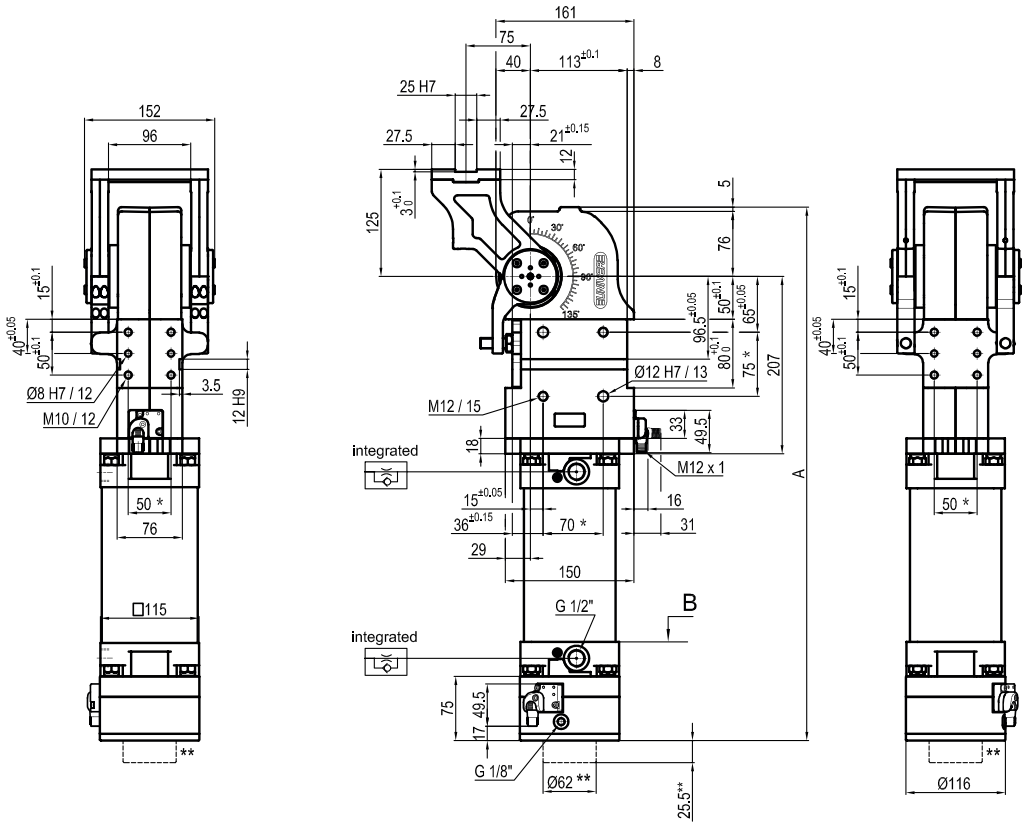

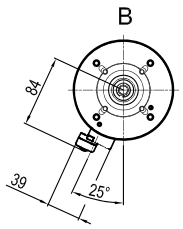

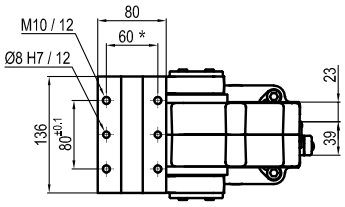

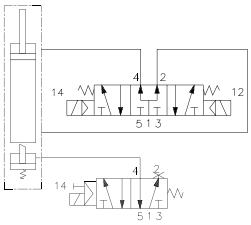

Pivot rotation (°)	A
45°	561.1
60°	572.6
90°	597.6
120°	622.6

**TOLERANCE BETWEEN DOWELS ± 0,02 BETWEEN SCREW HOLES ± 0,1*
***VERSION WITH BRAKE UNLOCK "M"*

Sensors

Body

Electronic (optical)

DF-K PNP M12
DF-J NPN M12
DF-Y PNP M12 White LED

Brake

Electronic

DF-S PNP M12

P Horizontal
Mirror of "O" position

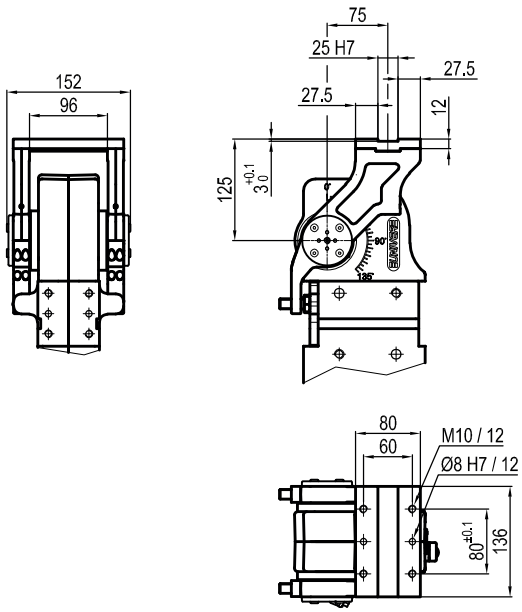

V Vertical 180°

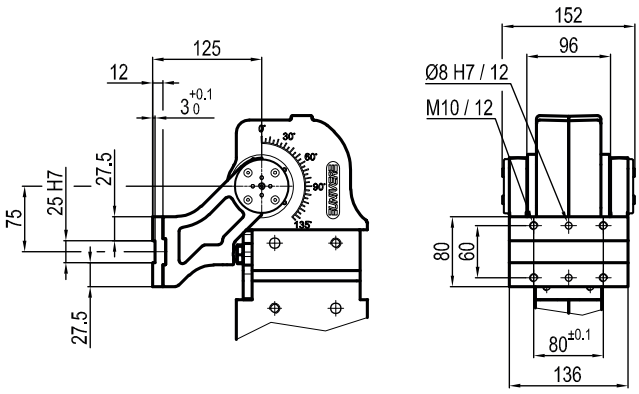

Z Vertical
Mirror of "V" position

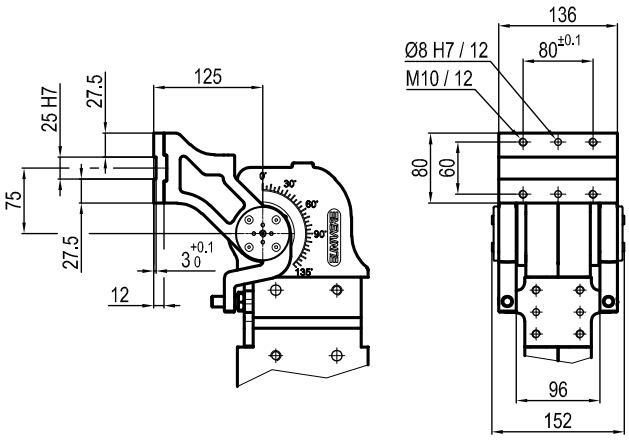

UAGP 150

Pneumatic power pivot 120 Nm with brake

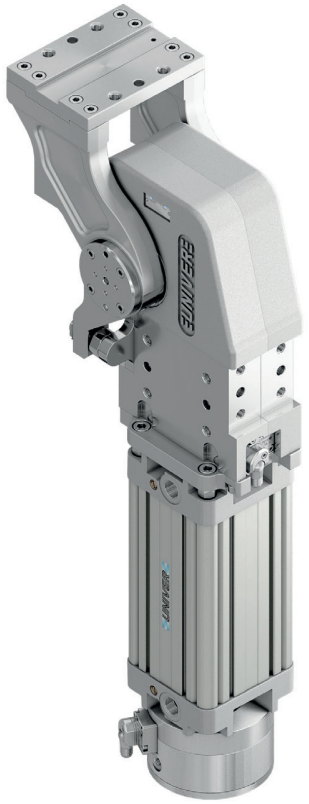

Pneumatic power pivot with brake typically used to rotate and dump fixtures and parts in a desired position.

- High repeatability
- Mechanical stops
- Integrated flow control system
- Double pneumatic cushioning
- Fixing ports on 4 sides
- Tapered roller bearings to support heavy load
- Orientable table in 4 pre-set positions
- Version with sensor on the brake available

CHARACTERISTICS

Operating temperature	**5° ÷ 45° C**
Min./Max. Operating pressure	**0,4 / 0,6 MPa**
Bore Ø	**100 mm**
Pivot rotation	**45°/60°/90°/120°**
Holding moment	**6000 Nm**
Max. torque at rotary table (0,55MPa)	**120 Nm**
Weight	**25 kg**
Pneumatic supply ports	**G1/2**
Body sensor	**electronic (optical)**
Brake sensor	**electronic**
Supply voltage	**10 ÷ 30 Vdc**
IP code	**IP 65**

OPTICAL SENSOR

FLOW CONTROL SYSTEM

HIGH REPEATABILITY

CODIFICATION KEY

UAG	P	150	O	A	090	B	S	0		
1	2	3	4	5	6	7	8	9	10	

1 SERIES
UAG = UNICLAMP Power pivot

2 VERSION
P = Pneumatic

3 SIZE
150 = 120 Nm Ø 100 mm

4 TABLE POSITION
O = Horizontal 90°
P = Horizontal mirror of "O"*
V = Vertical 180°
Z = Vertical mirror of "V"
*Max opening angle 60°

5 SENSOR
N = No sensor (with protection plate)
K = Electronic sensor PNP, M12 (DF-K)
Y = Electronic sensor PNP, M12 (DF-Y) white LED
J = Electronic sensor NPN, M12 (DF-J)
A = Electronic sensor PNP, optical for opening angle, M12 (DF-K) + brake sensor (DF-S)

6 PIVOT ROTATION
120 = 120°
090 = 90°
060 = 60°
045 = 45°

7 BRAKE SYSTEM
B = With brake
M = With brake and manual unlock

8 CONNECTIONS
S = Left side (Standard)
D = Right side
F = Front side
P = Rear side

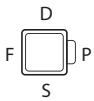

9 PRODUCT REVISION
Assigned by UNIVER

10 ATEX
X = ATEX option
See ATEX Catalogue for types and versions

O | Horizontal 90°

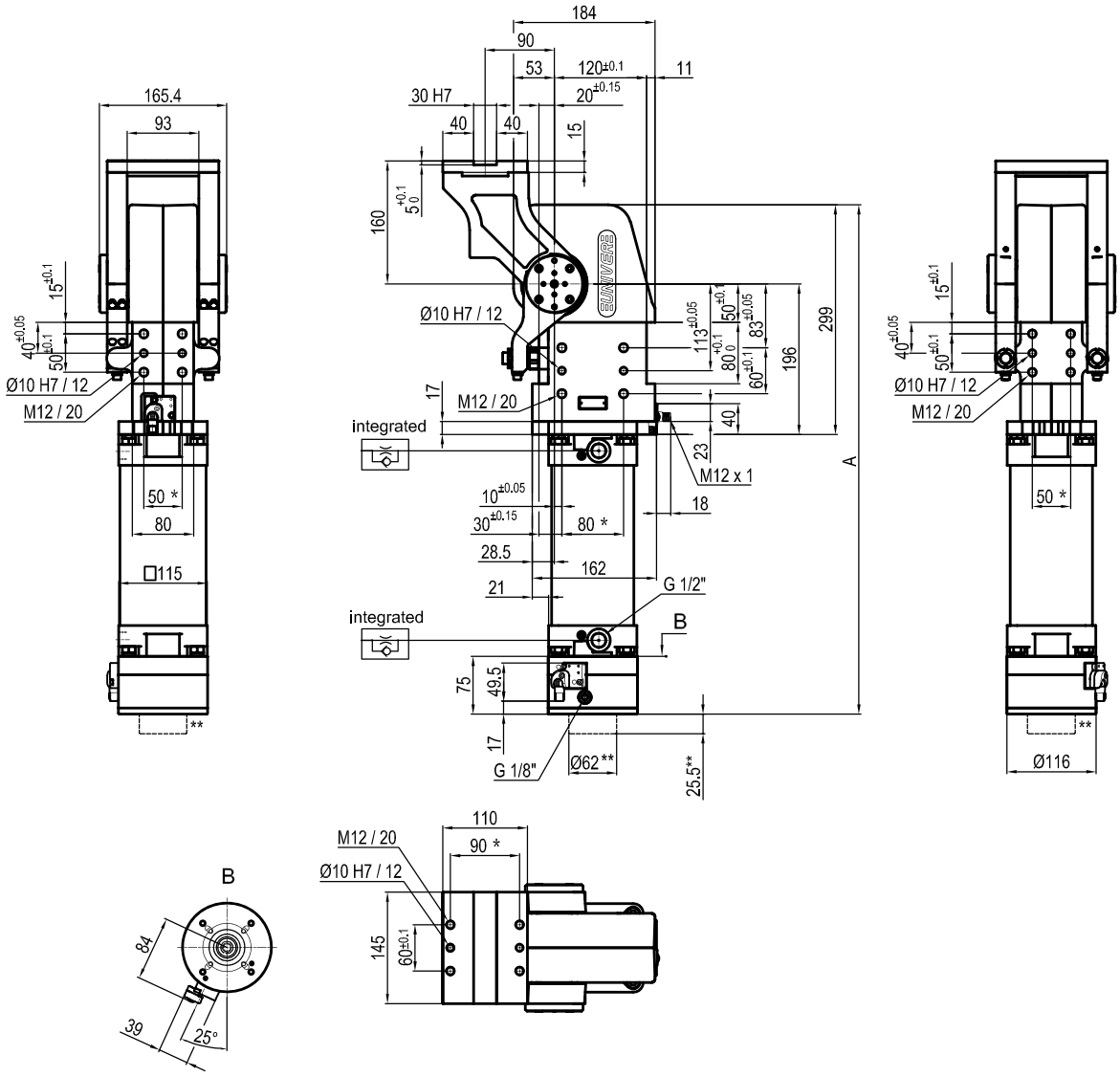

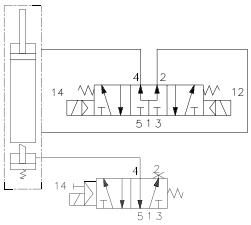

Pivot rotation (°)	A
45°	583.5
60°	597
90°	628
120°	662.5

**TOLERANCE BETWEEN DOWELS ± 0,02 BETWEEN SCREW HOLES ± 0,1*
***VERSION WITH BRAKE UNLOCK "M"*

Sensors

Body

Electronic (optical)

DF-K PNP M12
DF-J NPN M12
DF-Y PNP M12 White LED

Brake

Electronic

DF-S PNP M12

P Horizontal
Mirror of "O" position

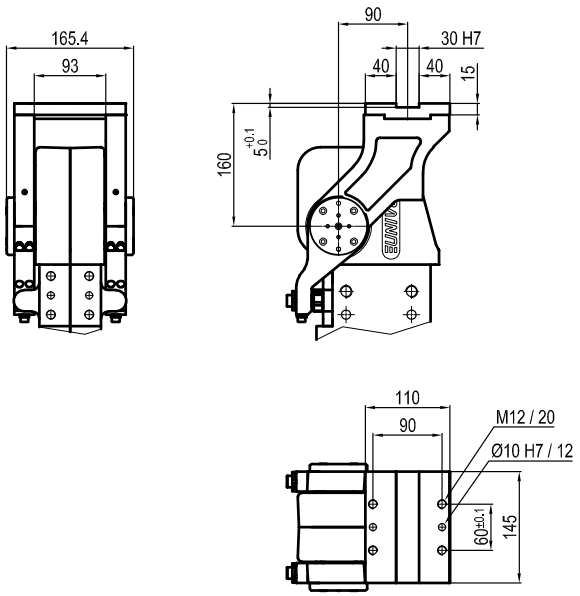

V Vertical 180°

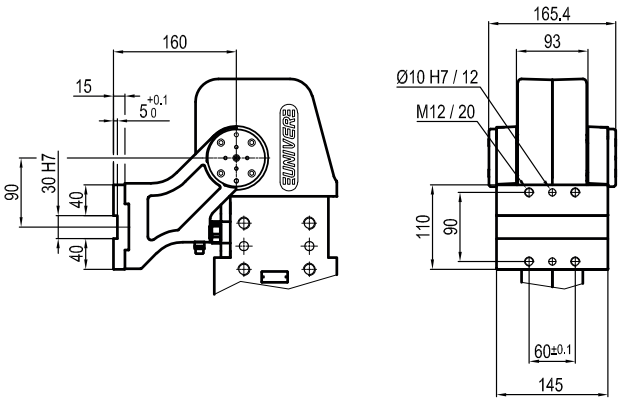

Z Vertical
Mirror of "V" position

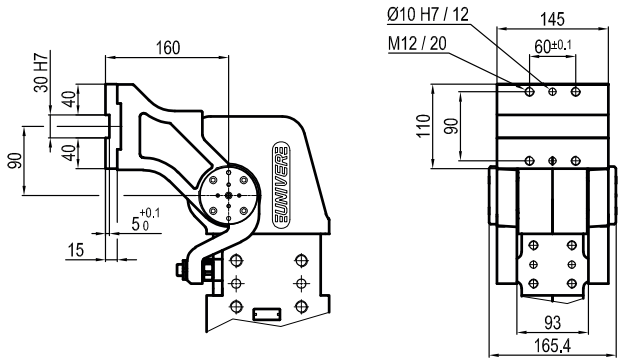

UAGP 155

Pneumatic power pivot 120 Nm with brake

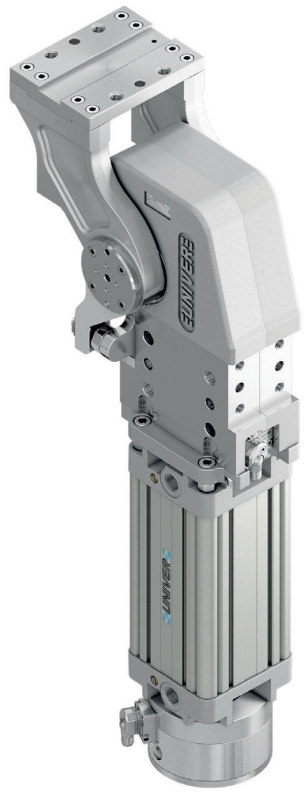

Pneumatic power pivot with brake typically used to rotate and dump fixtures and parts in a desired position.

- High repeatability
- Mechanical stops
- Integrated flow control system
- Double pneumatic cushioning
- Fixing ports on 4 sides
- Tapered roller bearings to support heavy load
- Orientable table in 4 pre-set positions
- Version with sensor on the brake available

CHARACTERISTICS

Operating temperature	**5° ÷ 45° C**
Min./Max. Operating pressure	**0,4 / 0,6 MPa**
Bore Ø	**100 mm**
Pivot rotation	**45°/60°/90°/120°**
Holding moment	**6000 Nm**
Max. torque at rotary table (0,55MPa)	**120 Nm**
Weight	**25 kg**
Pneumatic supply ports	**G1/2**
Body sensor	**electronic (optical)**
Brake sensor	**electronic**
Supply voltage	**10 ÷ 30 Vdc**
IP code	**IP 65**

OPTICAL SENSOR

FLOW CONTROL SYSTEM

HIGH REPEATABILITY

CODIFICATION KEY

UAG	P	155	O	A	090	B	S	0	
1	2	3	4	5	6	7	8	9	10

1 SERIES
UAG = UNICLAMP Power pivot

2 VERSION
P = Pneumatic

3 SIZE
155 = 120 Nm Ø 100 mm

4 TABLE POSITION
O = Horizontal 90°
P = Horizontal mirror of "O"*
V = Vertical 180°
Z = Vertical mirror of "V"
*Max opening angle 60°

5 SENSOR
N = No sensor (with protection plate)
K = Electronic sensor PNP, M12 (DF-K)
Y = Electronic sensor PNP, M12 (DF-Y) white LED
J = Electronic sensor NPN, M12 (DF-J)
A = Electronic sensor PNP, optical for opening angle, M12 (DF-K) + brake sensor (DF-S)

6 PIVOT ROTATION
120 = 120°
090 = 90°
060 = 60°
045 = 45°

7 BRAKE SYSTEM
B = With brake
M = With brake and manual unlock

8 CONNECTIONS
S = Left side (Standard)
D = Right side
F = Front side
P = Rear side

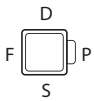

9 PRODUCT REVISION
Assigned by UNIVER

10 ATEX
X = ATEX option
See ATEX Catalogue for types and versions

O | Horizontal 90°

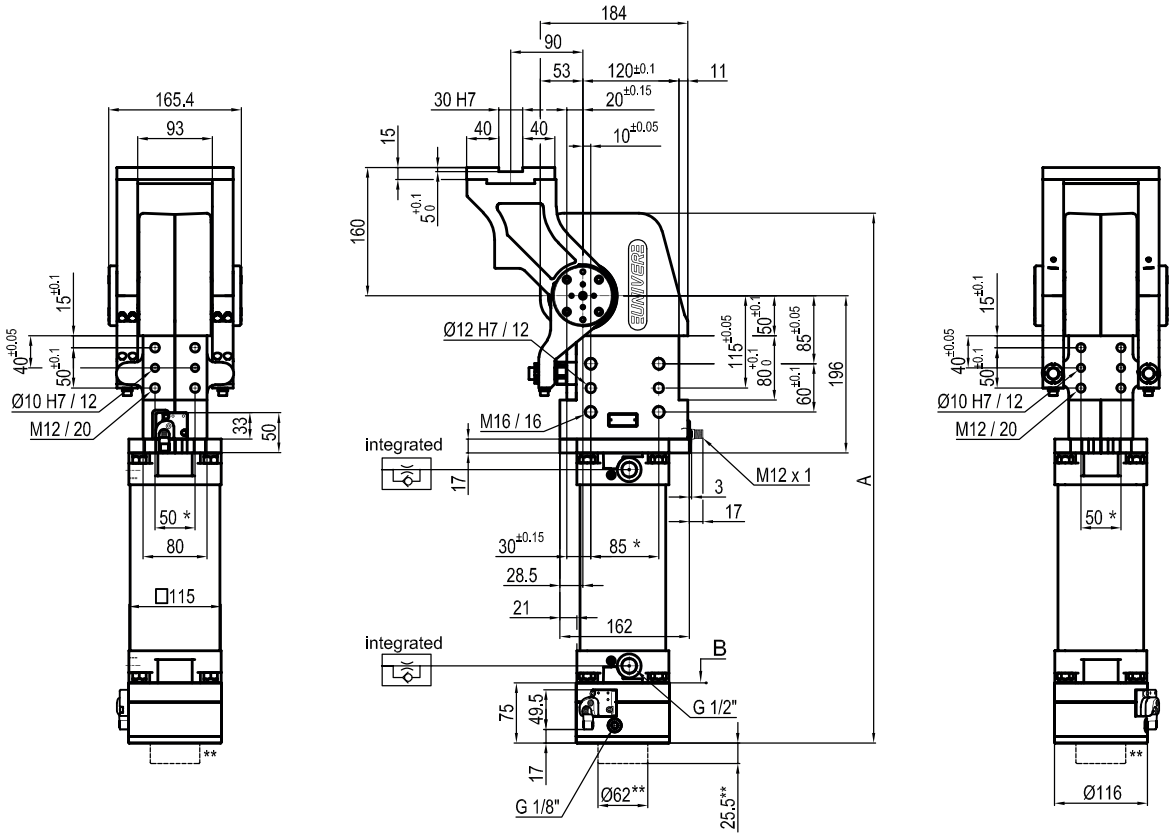

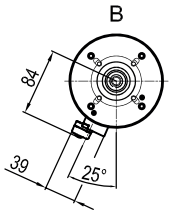

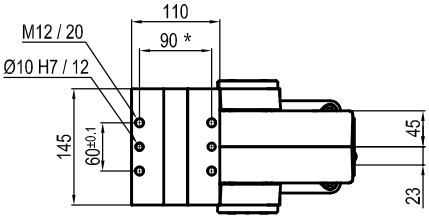

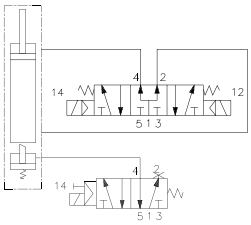

Pivot rotation (°)	A
45°	583.5
60°	597
90°	628
120°	662.5

**TOLERANCE BETWEEN DOWELS ± 0,02 BETWEEN SCREW HOLES ± 0,1*
***VERSION WITH BRAKE UNLOCK "M"*

Sensors

Body

Electronic (optical)

DF-K PNP M12
DF-J NPN M12
DF-Y PNP M12 White LED

Brake

Electronic

DF-S PNP M12

P Horizontal
Mirror of "O" position

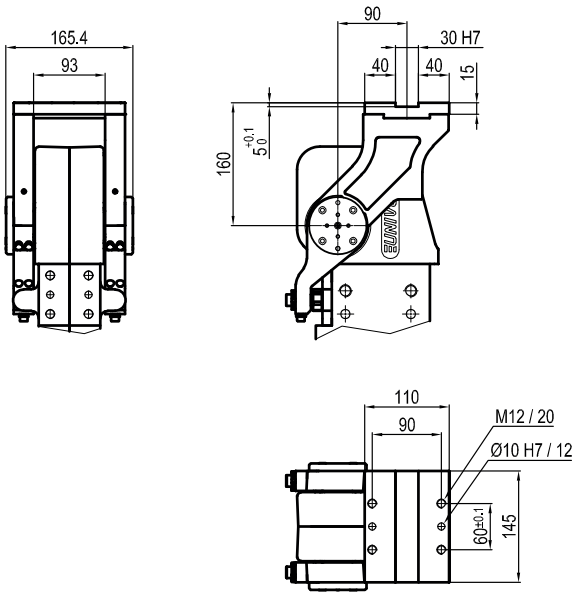

V Vertical 180°

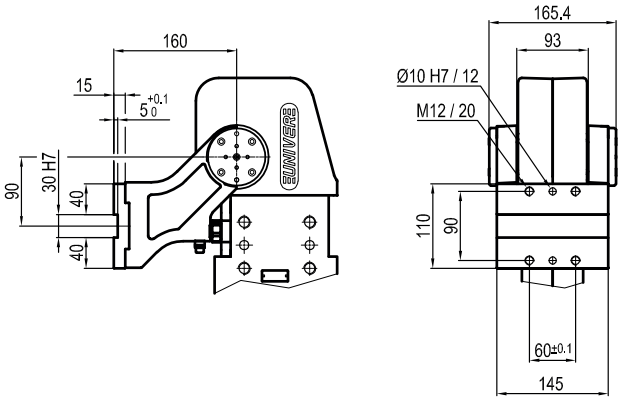

Z Vertical
Mirror of "V" position

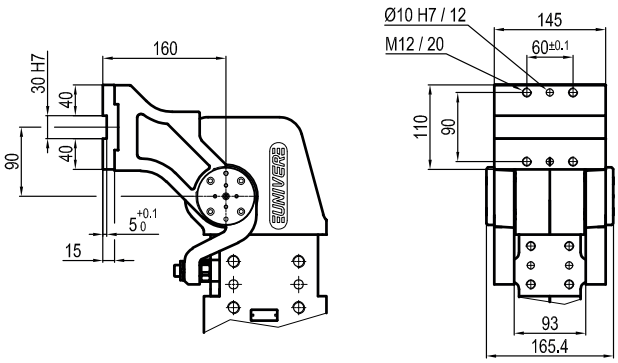

UAGP 170

Pneumatic power pivot 170 Nm with brake

Pneumatic power pivot with brake typically used to rotate and dump fixtures and parts in a desired position.

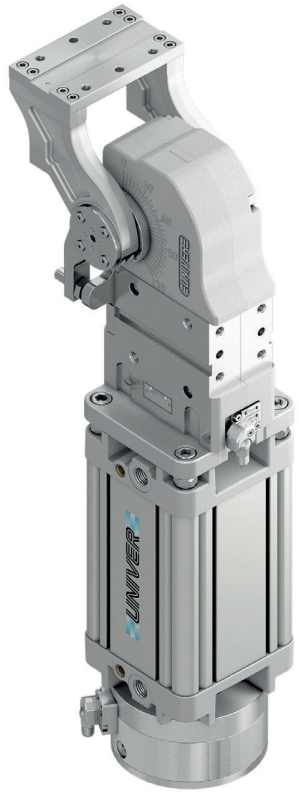

- High repeatability
- Mechanical stops
- Integrated flow control system
- Double pneumatic cushioning
- Fixing ports on 4 sides
- Tapered roller bearings to support heavy load
- Orientable table in 4 pre-set positions
- Version with sensor on the brake available

CHARACTERISTICS

Operating temperature	**5° ÷ 45° C**
Min./Max. Operating pressure	**0,4 / 0,6 MPa**
Bore Ø	**125 mm**
Pivot rotation	**45°/60°/90°/120°**
Holding moment	**4000 Nm**
Max. torque at rotary table (0,55MPa)	**170 Nm**
Weight	**22,3 kg**
Pneumatic supply ports	**G1/2**
Body sensor	**electronic (optical)**
Brake sensor	**electronic**
Supply voltage	**10 ÷ 30 Vdc**
IP code	**IP 65**

OPTICAL SENSOR

FLOW CONTROL SYSTEM

HIGH REPEATABILITY

CODIFICATION KEY

UAG	P	170	O	A	090	B	S	0	
1	2	3	4	5	6	7	8	9	10

1 SERIES
UAG = UNICLAMP Power pivot

2 VERSION
P = Pneumatic

3 SIZE
170 = 170 Nm Ø 125 mm

4 TABLE POSITION
O = Horizontal 90°
P = Horizontal mirror of "O"*
V = Vertical 180°
Z = Vertical mirror of "V"
*Max opening angle 60°

5 SENSOR
N = No sensor (with protection plate)
K = Electronic sensor PNP, M12 (DF-K)
Y = Electronic sensor PNP, M12 (DF-Y) white LED
J = Electronic sensor NPN, M12 (DF-J)
A = Electronic sensor PNP, optical for opening angle, M12 (DF-K) + brake sensor (DF-S)

6 PIVOT ROTATION
120 = 120°
090 = 90°
060 = 60°
045 = 45°

7 BRAKE SYSTEM
B = With brake
M = With brake and manual unlock

8 CONNECTIONS
S = Left side (Standard)
D = Right side
F = Front side
P = Rear side

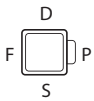

9 PRODUCT REVISION
Assigned by UNIVER

10 ATEX
X = ATEX option
See ATEX Catalogue for types and versions

O | Horizontal 90°

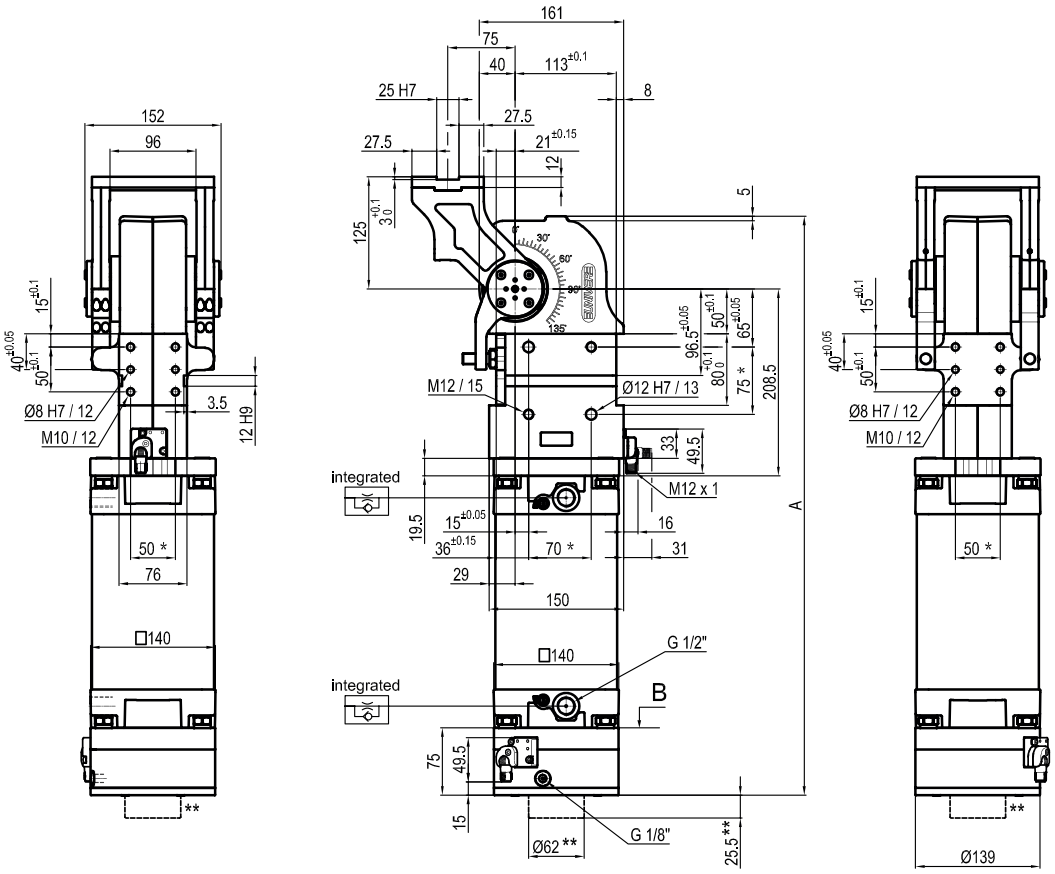

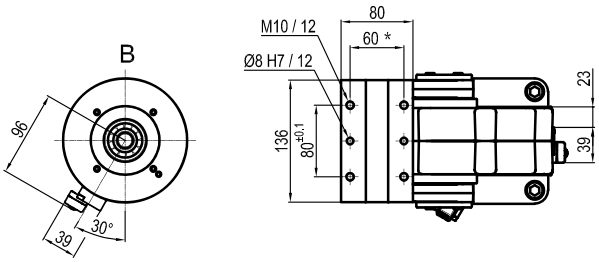

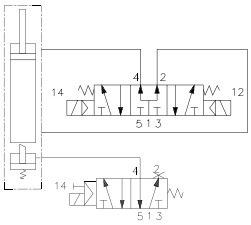

Pivot rotation (°)	A
45°	584
60°	595.5
90°	620.5
120°	646

**TOLERANCE BETWEEN DOWELS ± 0,02 BETWEEN SCREW HOLES ± 0,1*
***VERSION WITH BRAKE UNLOCK "M"*

Sensors

Body

Electronic (optical)

DF-K PNP M12
DF-J NPN M12
DF-Y PNP M12 White LED

Brake

Electronic

DF-S PNP M12

P Horizontal
Mirror of "O" position

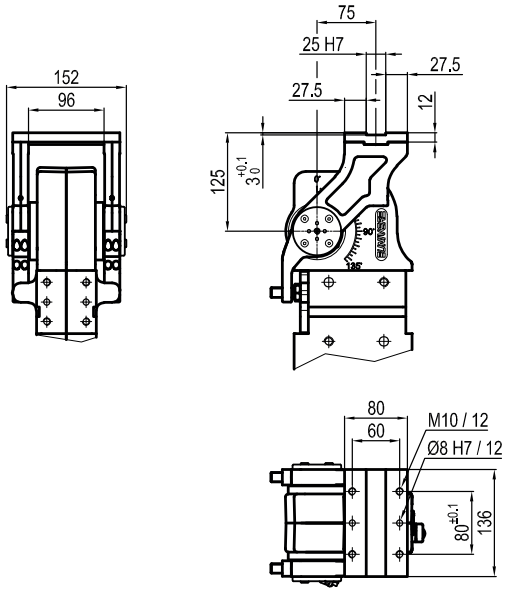

V Vertical 180°

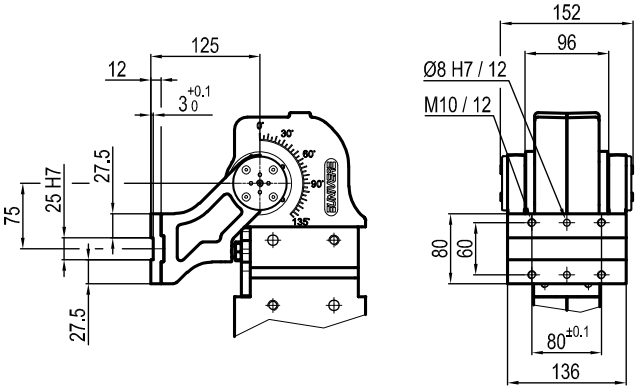

Z Vertical
Mirror of "V" position

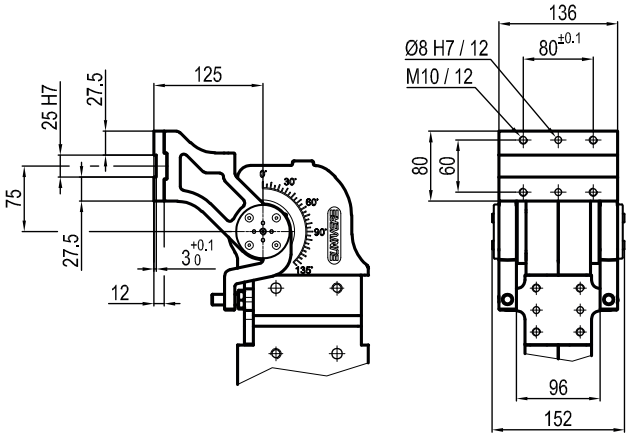

UAGP 210

Pneumatic power pivot 210 Nm with brake

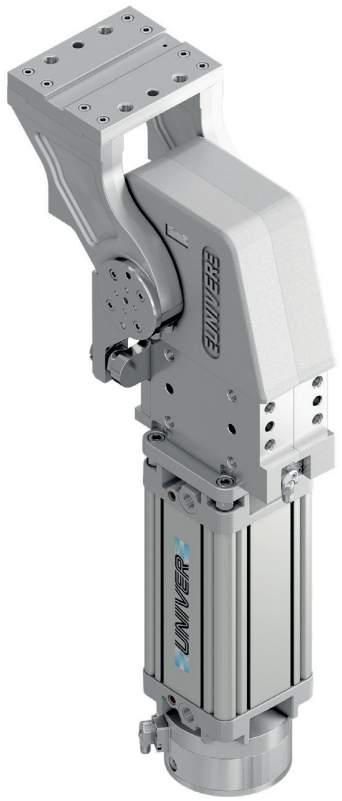

Pneumatic power pivot with brake typically used to rotate and dump fixtures and parts in a desired position.

- High repeatability
- Mechanical stops
- Integrated flow control system
- Double pneumatic cushioning
- Fixing ports on 4 sides
- Tapered roller bearings to support heavy load
- Orientable table in 4 pre-set positions
- Version with sensor on the brake available

CHARACTERISTICS

Operating temperature	**5° ÷ 45° C**
Min./Max. Operating pressure	**0,4 / 0,6 MPa**
Bore Ø	**125 mm**
Pivot rotation	**45°/60°/90°/120°**
Holding moment	**8000 Nm**
Max. torque at rotary table (0,55MPa)	**210 Nm**
Weight	**48 kg**
Pneumatic supply ports	**G1/2**
Body sensor	**electronic (optical)**
Brake sensor	**electronic**
Supply voltage	**10 ÷ 30 Vdc**
IP code	**IP 65**

OPTICAL SENSOR

FLOW CONTROL SYSTEM

HIGH REPEATABILITY

CODIFICATION KEY

UAG	P	210	O	A	090	B	S	0	
1	2	3	4	5	6	7	8	9	10

1 SERIES
UAG = UNICLAMP Power pivot

2 VERSION
P = Pneumatic

3 SIZE
210 = 210 Nm Ø 125 mm

4 TABLE POSITION
O = Horizontal 90°
P = Horizontal mirror of "O"*
V = Vertical 180°
Z = Vertical mirror of "V"
*Max opening angle 60°

5 SENSOR
N = No sensor (with protection plate)
K = Electronic sensor PNP, M12 (DF-K)
Y = Electronic sensor PNP, M12 (DF-Y) white LED
J = Electronic sensor NPN, M12 (DF-J)
A = Electronic sensor PNP, optical for opening angle, M12 (DF-K) + brake sensor (DF-S)

6 PIVOT ROTATION
120 = 120°
090 = 90°
060 = 60°
045 = 45°

7 BRAKE SYSTEM
B = With brake
M = With brake and manual unlock

8 CONNECTIONS
S = Left side (Standard)
D = Right side
F = Front side
P = Rear side

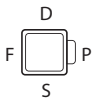

9 PRODUCT REVISION
Assigned by UNIVER

10 ATEX
X = ATEX option
See ATEX Catalogue for types and versions

O | Horizontal 90°

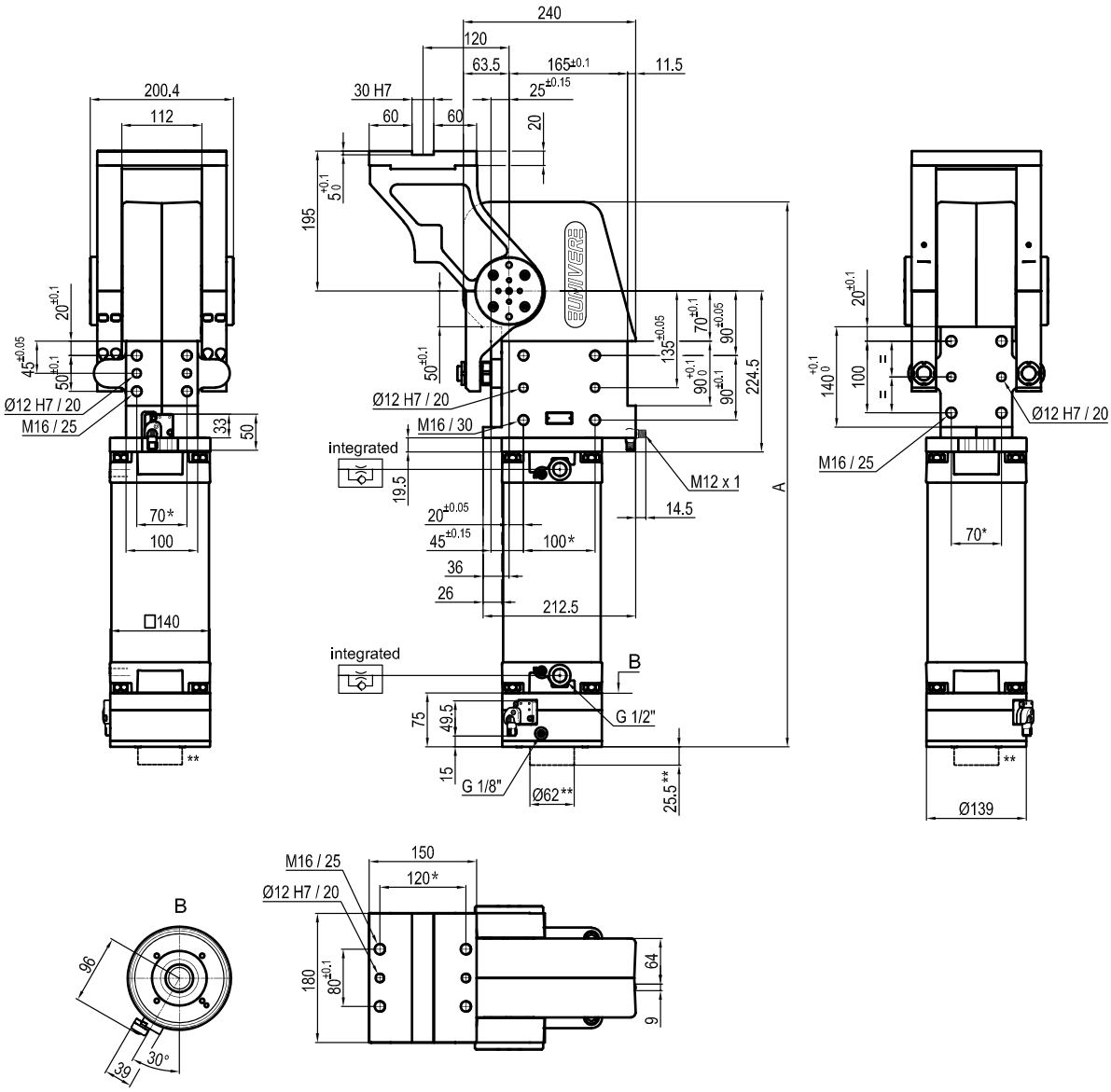

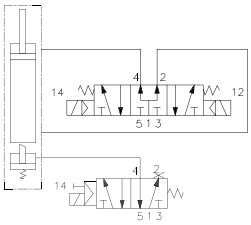

Pivot rotation (°)	A
45°	666.5
60°	682.5
90°	719
120°	759.5

**TOLERANCE BETWEEN DOWELS ± 0,02 BETWEEN SCREW HOLES ± 0,1*
***VERSION WITH BRAKE UNLOCK "M"*

Sensors

Body

Electronic (optical)

DF-K PNP M12
DF-J NPN M12
DF-Y PNP M12 White LED

Brake

Electronic

DF-S PNP M12

P Horizontal

Mirror of "**O**" position

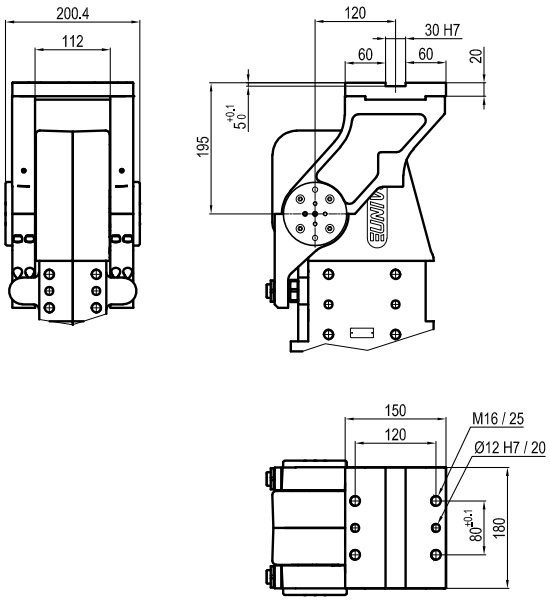

V Vertical 180°

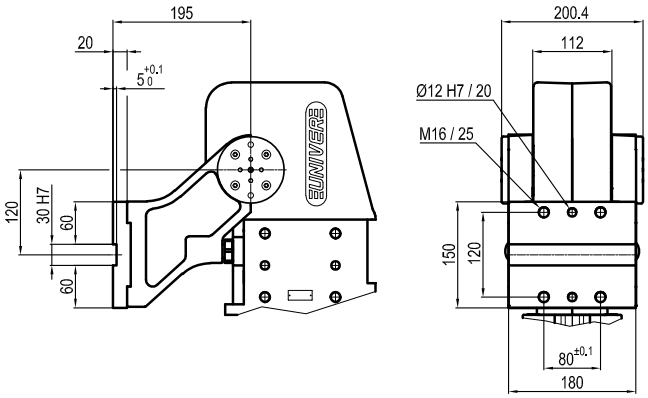

Z Vertical

Mirror of "**V**" position

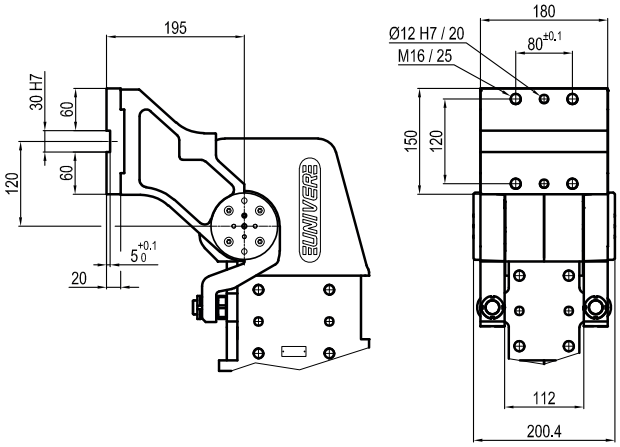

UAGP 215

Pneumatic power pivot 210 Nm with brake

Pneumatic power pivot with brake typically used to rotate and dump fixtures and parts in a desired position.

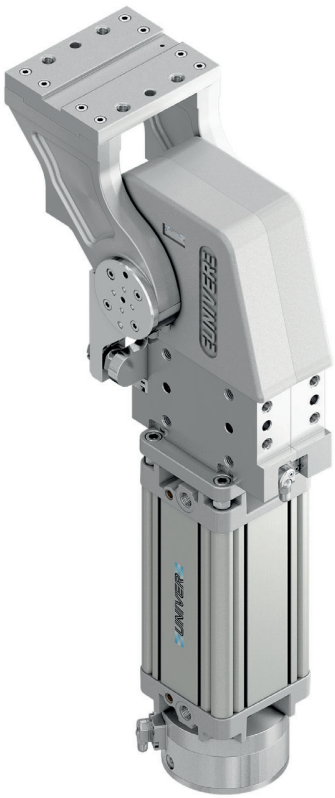

- High repeatability
- Mechanical stops
- Integrated flow control system
- Double pneumatic cushioning
- Fixing ports on 4 sides
- Tapered roller bearings to support heavy load
- Orientable table in 4 pre-set positions
- Version with sensor on the brake available

CHARACTERISTICS

Operating temperature	**5° ÷ 45° C**
Min./Max. Operating pressure	**0,4 / 0,6 MPa**
Bore Ø	**125 mm**
Pivot rotation	**45°/60°/90°/120°**
Holding moment	**8000 Nm**
Max. torque at rotary table (0,55MPa)	**210 Nm**
Weight	**48 kg**
Pneumatic supply ports	**G1/2**
Body sensor	**electronic (optical)**
Brake sensor	**electronic**
Supply voltage	**10 ÷ 30 Vdc**
IP code	**IP 65**

OPTICAL SENSOR

FLOW CONTROL SYSTEM

HIGH REPEATABILITY

CODIFICATION KEY

UAG	P	215	O	A	090	B	S	0	
1	2	3	4	5	6	7	8	9	10

1 SERIES
UAG = UNICLAMP Power pivot

2 VERSION
P = Pneumatic

3 SIZE
215 = 210 Nm Ø 125 mm

4 TABLE POSITION
O = Horizontal 90°
P = Horizontal mirror of "O"*
V = Vertical 180°
Z = Vertical mirror of "V"
*Max opening angle 60°

5 SENSOR
N = No sensor (with protection plate)
K = Electronic sensor PNP, M12 (DF-K)
Y = Electronic sensor PNP, M12 (DF-Y) white LED
J = Electronic sensor NPN, M12 (DF-J)
A = Electronic sensor PNP, optical for opening angle, M12 (DF-K) + brake sensor (DF-S)

6 PIVOT ROTATION
120 = 120°
090 = 90°
060 = 60°
045 = 45°

7 BRAKE SYSTEM
B = With brake
M = With brake and manual unlock

8 CONNECTIONS
S = Left side (Standard)
D = Right side
F = Front side
P = Rear side

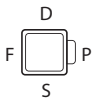

9 PRODUCT REVISION
Assigned by UNIVER

10 ATEX
X = ATEX option
See ATEX Catalogue for types and versions

O | Horizontal 90°

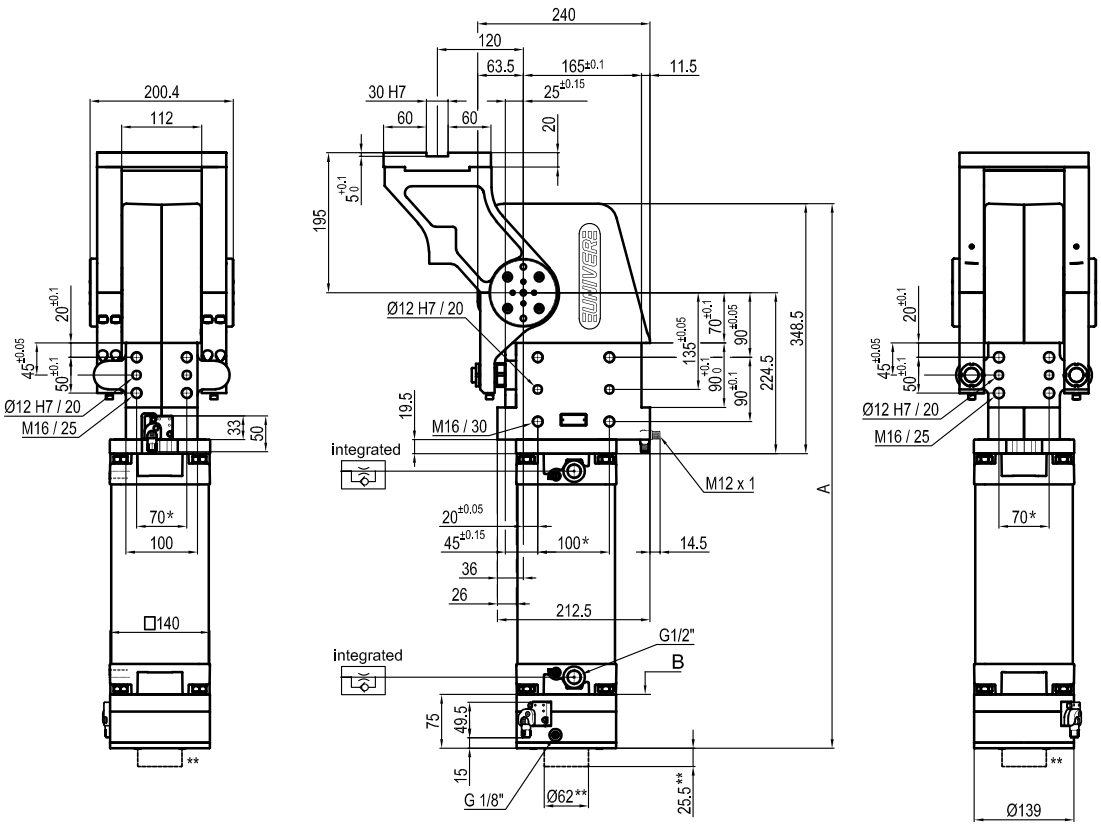

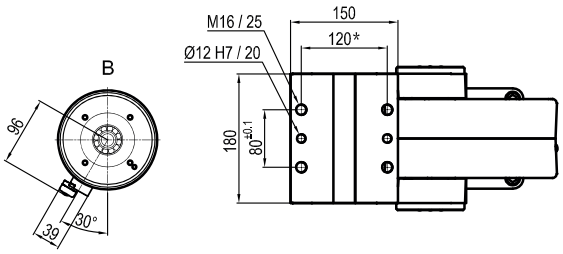

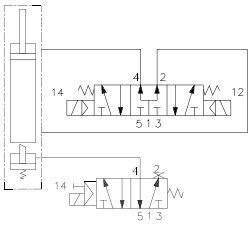

Pivot rotation (°)	A
45°	666.5
60°	682.5
90°	719
120°	759.5

**TOLERANCE BETWEEN DOWELS ± 0,02 BETWEEN SCREW HOLES ± 0,1*
***VERSION WITH BRAKE UNLOCK "M"*

Sensors

Body

Electronic (optical)

DF-K PNP M12
DF-J NPN M12
DF-Y PNP M12 White LED

Brake

Electronic

DF-S PNP M12

P Horizontal
Mirror of "O" position

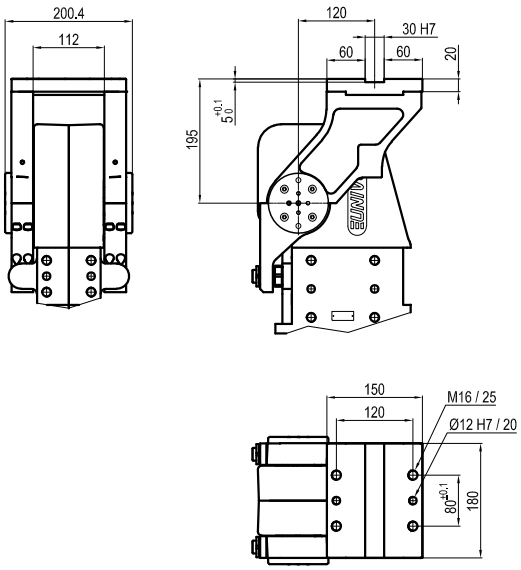

V Vertical 180°

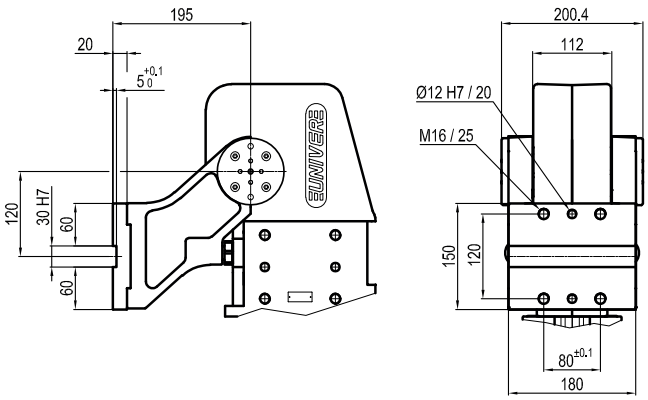

Z Vertical
Mirror of "V" position

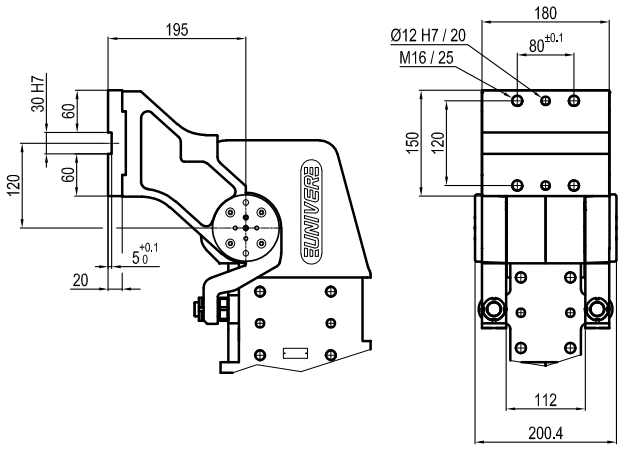

UAGP 300

Pneumatic power pivot 300 Nm with brake

Pneumatic power pivot with brake typically used to rotate and dump fixtures and parts in a desired position.

- High repeatability
- Mechanical stops
- Integrated flow control system
- Double pneumatic cushioning
- Fixing ports on 4 sides
- Tapered roller bearings to support heavy load
- Orientable table in 4 pre-set positions
- Version with sensor on the brake available

CHARACTERISTICS

Operating temperature	**5° ÷ 45° C**
Min./Max. Operating pressure	**0,4 / 0,6 MPa**
Bore Ø	**160 mm**
Pivot rotation	**45°/60°/90°/120°**
Holding moment	**6000 Nm**
Max. torque at rotary table (0,55MPa)	**300 Nm**
Weight	**39,3 kg**
Pneumatic supply ports	**G3/4**
Body sensor	**electronic (optical)**
Brake sensor	**electronic**
Supply voltage	**10 ÷ 30 Vdc**
IP code	**IP 65**

OPTICAL SENSOR

FLOW CONTROL SYSTEM

HIGH REPEATABILITY

CODIFICATION KEY

UAG	P	300	O	A	090	B	S	0	
1	2	3	4	5	6	7	8	9	10

1 SERIES
UAG = UNICLAMP Power pivot

2 VERSION
P = Pneumatic

3 SIZE
300 = 300 Nm Ø 160 mm

4 TABLE POSITION
O = Horizontal 90°
P = Horizontal mirror of "O"*
V = Vertical 180°
Z = Vertical mirror of "V"
*Max opening angle 60°

5 SENSOR
N = No sensor (with protection plate)
K = Electronic sensor PNP, M12 (DF-K)
Y = Electronic sensor PNP, M12 (DF-Y) white LED
J = Electronic sensor NPN, M12 (DF-J)
A = Electronic sensor PNP, optical for opening angle, M12 (DF-K) + brake sensor (DF-S)

6 PIVOT ROTATION
120 = 120°
090 = 90°
060 = 60°
045 = 45°

7 BRAKE SYSTEM
B = With brake
M = With brake and manual unlock

8 CONNECTIONS
S = Left side (Standard)
D = Right side
F = Front side
P = Rear side

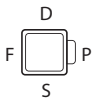

9 PRODUCT REVISION
Assigned by UNIVER

10 ATEX
X = ATEX option
See ATEX Catalogue for types and versions

O | Horizontal 90°

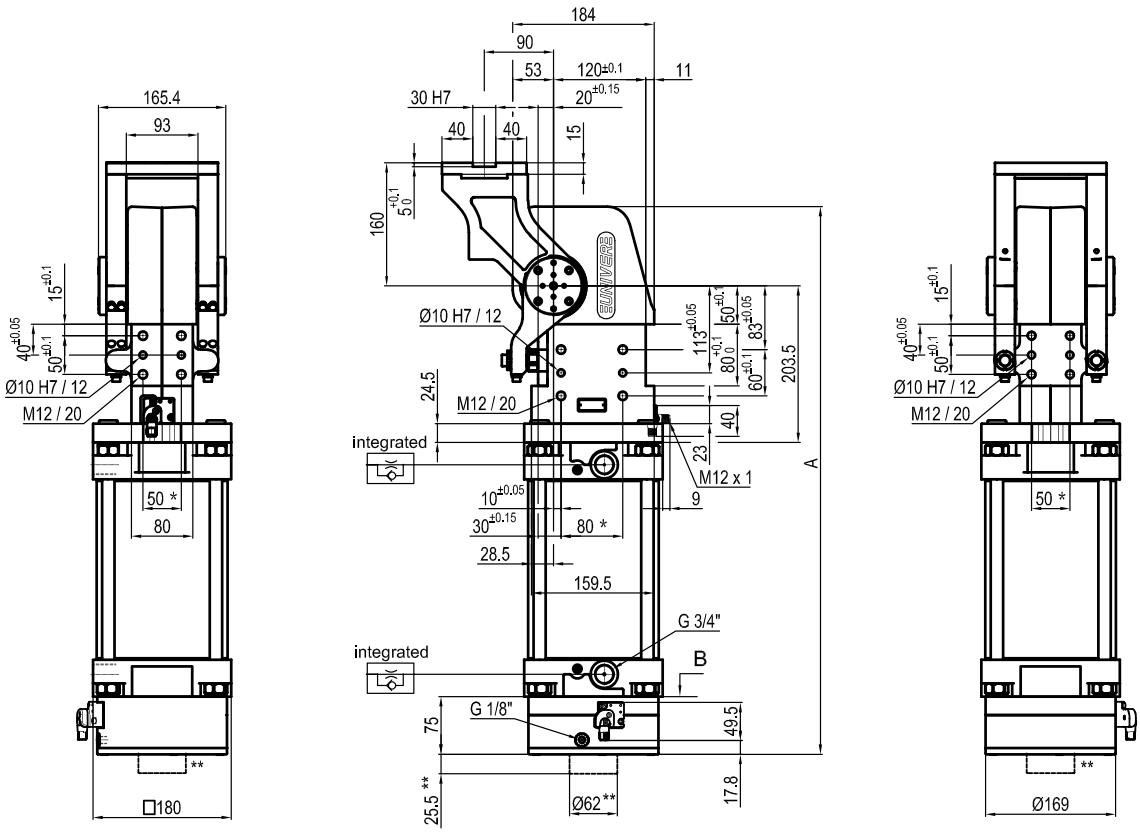

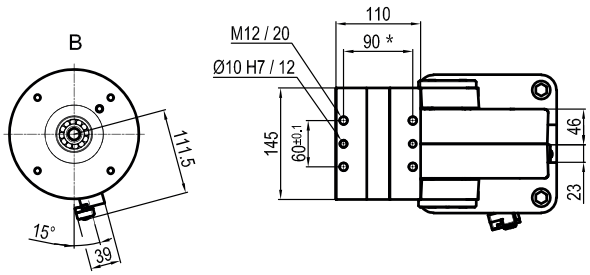

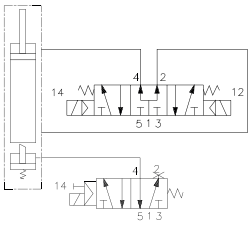

Pivot rotation (°)	A
45°	633
60°	647
90°	678
120°	712

**TOLERANCE BETWEEN DOWELS ± 0,02 BETWEEN SCREW HOLES ± 0,1*
***VERSION WITH BRAKE UNLOCK "M"*

Sensors

Body

Electronic (optical)

DF-K PNP M12
DF-J NPN M12
DF-Y PNP M12 White LED

Brake

Electronic

DF-S PNP M12

P Horizontal

Mirror of "O" position

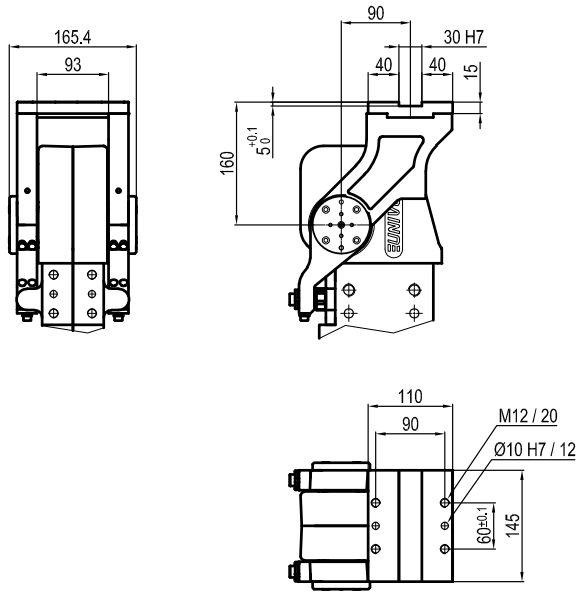

V Vertical 180°

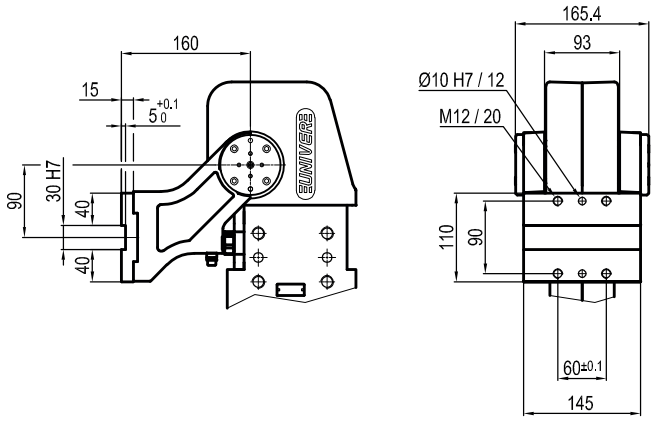

Z Vertical

Mirror of "V" position

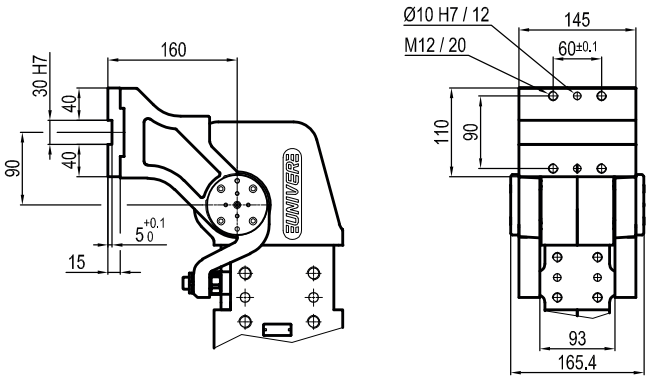

UAGP 350

Pneumatic power pivot 350 Nm with brake

Pneumatic power pivot with brake typically used to rotate and dump fixtures and parts in a desired position.

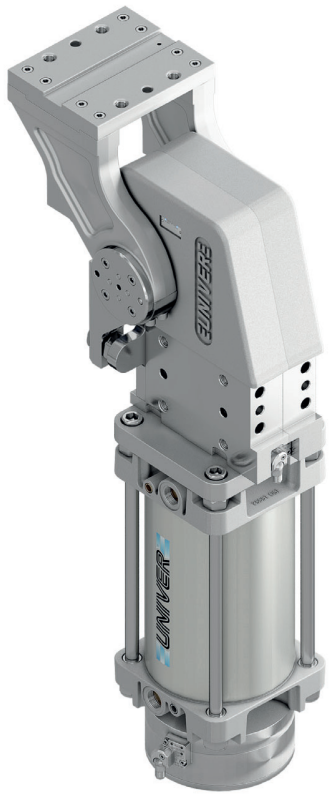

- High repeatability
- Mechanical stops
- Integrated flow control system
- Double pneumatic cushioning
- Fixing ports on 4 sides
- Tapered roller bearings to support heavy load
- Orientable table in 4 pre-set positions
- Version with sensor on the brake available

CHARACTERISTICS

Operating temperature	**5° ÷ 45° C**
Min./Max. Operating pressure	**0,4 / 0,6 MPa**
Bore Ø	**160 mm**
Pivot rotation	**45°/60°/90°/120°**
Holding moment	**8000 Nm**
Max. torque at rotary table (0,55MPa)	**350 Nm**
Weight	**55 kg**
Pneumatic supply ports	**G3/4**
Body sensor	**electronic (optical)**
Brake sensor	**electronic**
Supply voltage	**10 ÷ 30 Vdc**
IP code	**IP 65**

OPTICAL SENSOR

FLOW CONTROL SYSTEM

HIGH REPEATABILITY

CODIFICATION KEY

UAG	P	350	O	A	090	B	S	0	
1	2	3	4	5	6	7	8	9	10

1 SERIES
UAG = UNICLAMP Power pivot

2 VERSION
P = Pneumatic

3 SIZE
350 = 350 Nm Ø 160 mm

4 TABLE POSITION
O = Horizontal 90°
P = Horizontal mirror of "O"*
V = Vertical 180°
Z = Vertical mirror of "V"
*Max opening angle 60°

5 SENSOR
N = No sensor (with protection plate)
K = Electronic sensor PNP, M12 (DF-K)
Y = Electronic sensor PNP, M12 (DF-Y) white LED
J = Electronic sensor NPN, M12 (DF-J)
A = Electronic sensor PNP, optical for opening angle, M12 (DF-K) + brake sensor (DF-S)

6 PIVOT ROTATION
120 = 120°
090 = 90°
060 = 60°
045 = 45°

7 BRAKE SYSTEM
B = With brake
M = With brake and manual unlock

8 CONNECTIONS
S = Left side (Standard)
D = Right side
F = Front side
P = Rear side

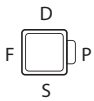

9 PRODUCT REVISION
Assigned by UNIVER

10 ATEX
X = ATEX option
See ATEX Catalogue for types and versions

O | Horizontal 90°

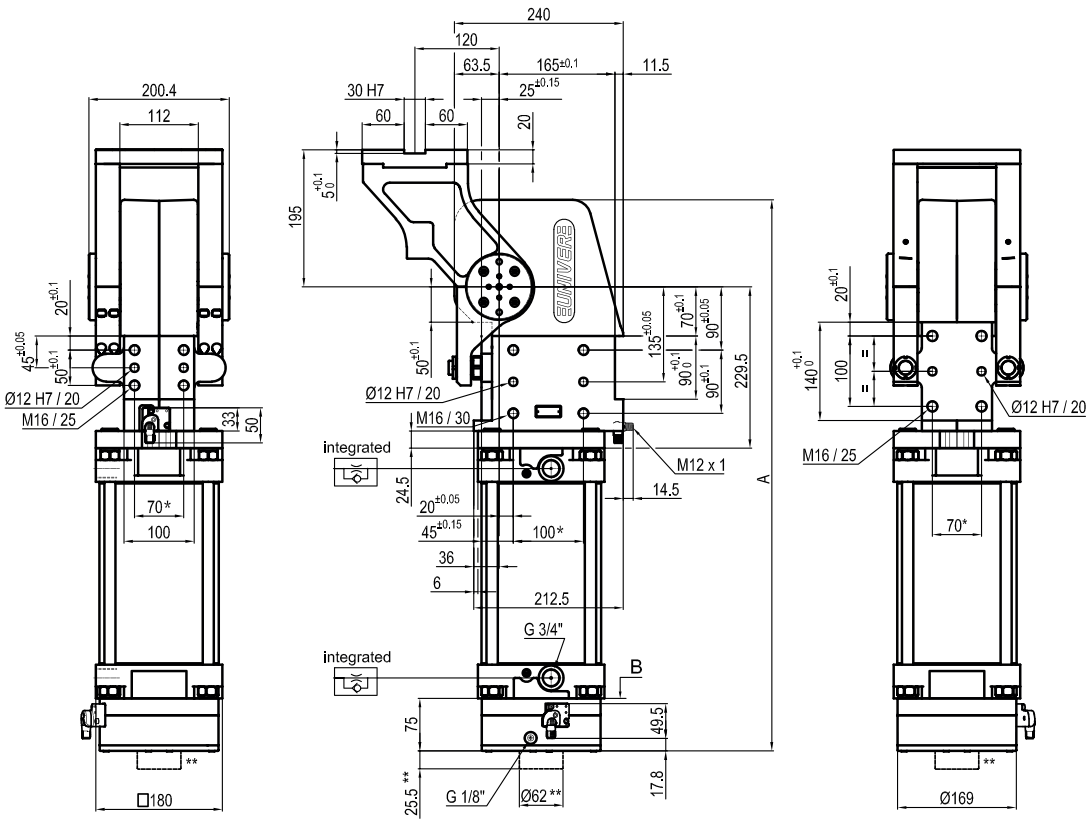

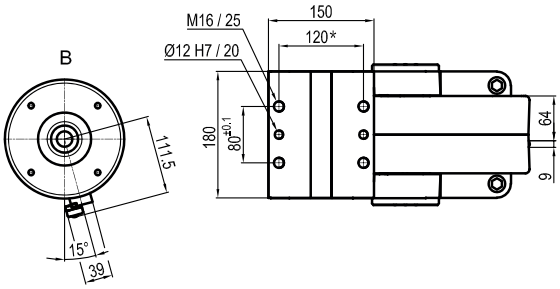

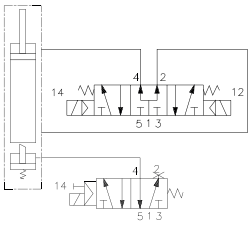

Pivot rotation (°)	A
45°	691
60°	707
90°	744
120°	784

**TOLERANCE BETWEEN DOWELS ± 0,02 BETWEEN SCREW HOLES ± 0,1*
***VERSION WITH BRAKE UNLOCK "M"*

Sensors

Body

Electronic (optical)

DF-K PNP M12
DF-J NPN M12
DF-Y PNP M12 White LED

Brake

Electronic

DF-S PNP M12

P Horizontal
Mirror of "**O**" position

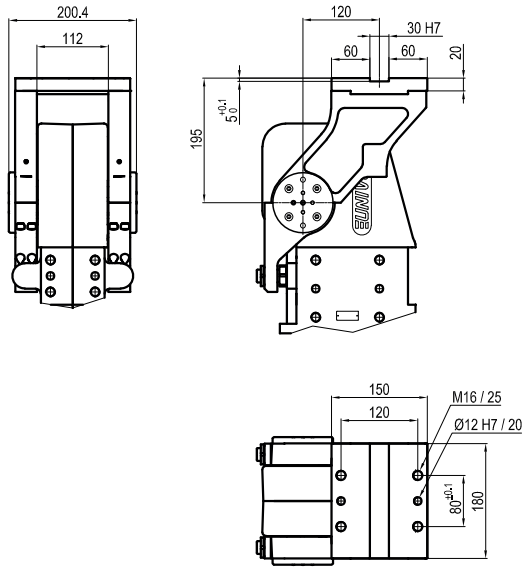

V Vertical 180°

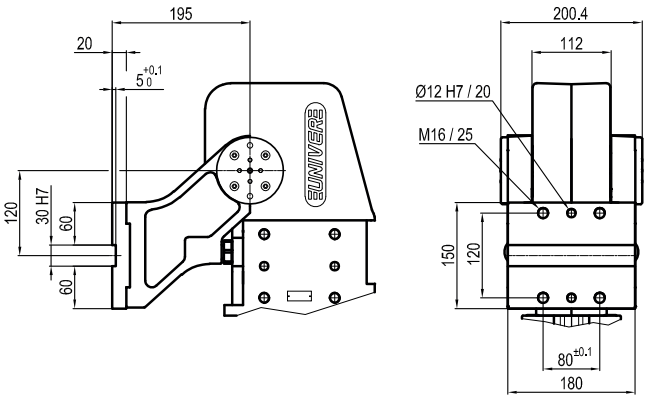

Z Vertical
Mirror of "**V**" position

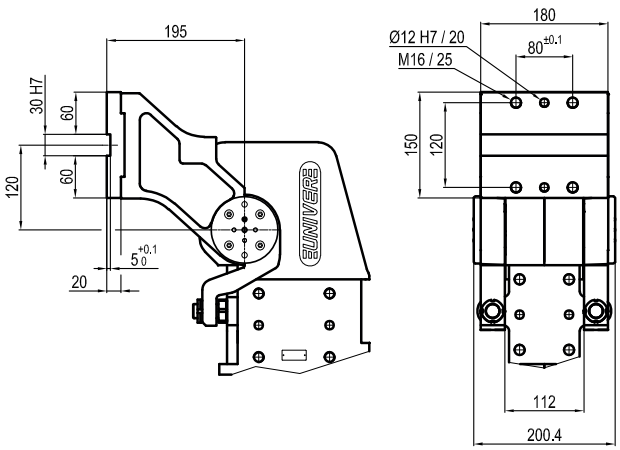

UAGP 355

Pneumatic power pivot 350 Nm with brake

Pneumatic power pivot with brake typically used to rotate and dump fixtures and parts in a desired position.

- High repeatability
- Mechanical stops
- Integrated flow control system
- Double pneumatic cushioning
- Fixing ports on 4 sides
- Tapered roller bearings to support heavy load
- Orientable table in 4 pre-set positions
- Version with sensor on the brake available

CHARACTERISTICS

Operating temperature	**5° ÷ 45° C**
Min./Max. Operating pressure	**0,4 / 0,6 MPa**
Bore Ø	**160 mm**
Pivot rotation	**45°/60°/90°/120°**
Holding moment	**8000 Nm**
Max. torque at rotary table (0,55MPa)	**350 Nm**
Weight	**55 kg**
Pneumatic supply ports	**G3/4**
Body sensor	**electronic (optical)**
Brake sensor	**electronic**
Supply voltage	**10 ÷ 30 Vdc**
IP code	**IP 65**

OPTICAL SENSOR

FLOW CONTROL SYSTEM

HIGH REPEATABILITY

CODIFICATION KEY

UAG	P	355	O	A	090	B	S	0	
1	2	3	4	5	6	7	8	9	10

1 SERIES
UAG = UNICLAMP Power pivot

2 VERSION
P = Pneumatic

3 SIZE
355 = 350 Nm Ø 160 mm

4 TABLE POSITION
O = Horizontal 90°
P = Horizontal mirror of "O"*
V = Vertical 180°
Z = Vertical mirror of "V"
*Max opening angle 60°

5 SENSOR
N = No sensor (with protection plate)
K = Electronic sensor PNP, M12 (DF-K)
Y = Electronic sensor PNP, M12 (DF-Y) white LED
J = Electronic sensor NPN, M12 (DF-J)
A = Electronic sensor PNP, optical for opening angle, M12 (DF-K) + brake sensor (DF-S)

6 PIVOT ROTATION
120 = 120°
090 = 90°
060 = 60°
045 = 45°

7 BRAKE SYSTEM
B = With brake
M = With brake and manual unlock

8 CONNECTIONS
S = Left side (Standard)
D = Right side
F = Front side
P = Rear side

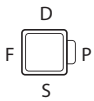

9 PRODUCT REVISION
Assigned by UNIVER

10 ATEX
X = ATEX option
See ATEX Catalogue for types and versions

O | Horizontal 90°

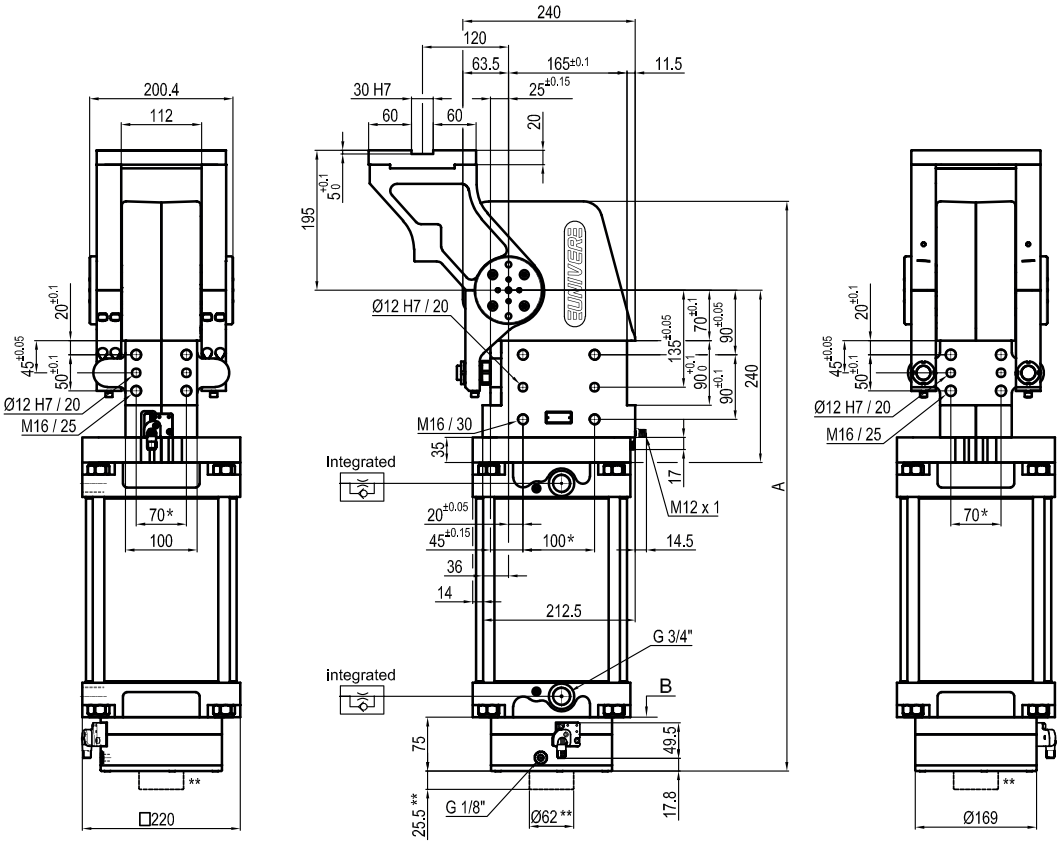

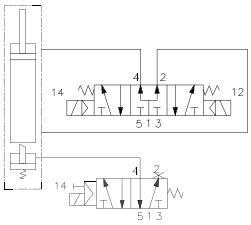

Pivot rotation (°)	A
45°	691
60°	707
90°	744
120°	784

**TOLERANCE BETWEEN DOWELS ± 0,02 BETWEEN SCREW HOLES ± 0,1*
***VERSION WITH BRAKE UNLOCK "M"*

Sensors

Body

Electronic (optical)

DF-K PNP M12
DF-J NPN M12
DF-Y PNP M12 White LED

Brake

Electronic

DF-S PNP M12

P Horizontal
Mirror of "O" position

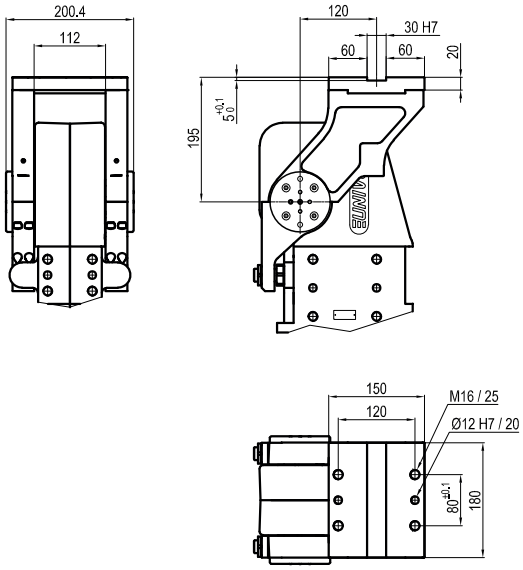

V Vertical 180°

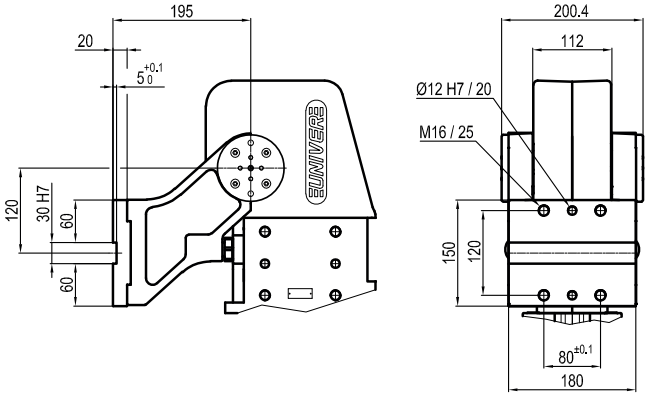

Z Vertical
Mirror of "V" position

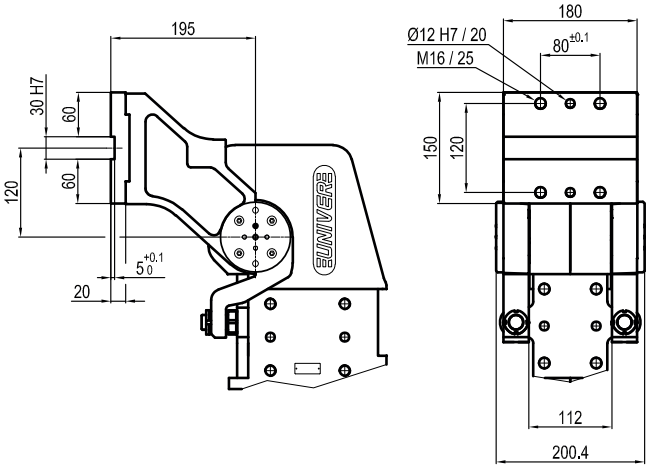

UAGP 600

Pneumatic power pivot 600 Nm with brake

Pneumatic power pivot with brake typically used to rotate and dump fixtures and parts in a desired position.

- High repeatability
- Mechanical stops
- Integrated flow control system
- Double pneumatic cushioning
- Fixing ports on 4 sides
- Tapered roller bearings to support heavy load
- Orientable table in 4 pre-set positions
- Version with sensor on the brake available

CHARACTERISTICS

Operating temperature	**5° ÷ 45° C**
Min./Max. Operating pressure	**0,4 / 0,6 MPa**
Bore Ø	**200 mm**
Pivot rotation	**45°/60°/90°/120°**
Holding moment	**8000 Nm**
Max. torque at rotary table (0,55MPa)	**600 Nm**
Weight	**59,7 kg**
Pneumatic supply ports	**G3/4**
Body sensor	**electronic (optical)**
Brake sensor	**electronic**
Supply voltage	**10 ÷ 30 Vdc**
IP code	**IP 65**

OPTICAL SENSOR

FLOW CONTROL SYSTEM

HIGH REPEATABILITY

CODIFICATION KEY

UAG	P	600	O	A	090	B	S	0	
1	2	3	4	5	6	7	8	9	10

1 SERIES
UAG = UNICLAMP Power pivot

2 VERSION
P = Pneumatic

3 SIZE
600 = 600 Nm Ø 200 mm

4 TABLE POSITION
O = Horizontal 90°
P = Horizontal mirror of "O"*
V = Vertical 180°
Z = Vertical mirror of "V"
*Max opening angle 60°

5 SENSOR
N = No sensor (with protection plate)
K = Electronic sensor PNP, M12 (DF-K)
Y = Electronic sensor PNP, M12 (DF-Y) white LED
J = Electronic sensor NPN, M12 (DF-J)
A = Electronic sensor PNP, optical for opening angle, M12 (DF-K) + brake sensor (DF-S)

6 PIVOT ROTATION
120 = 120°
090 = 90°
060 = 60°
045 = 45°

7 BRAKE SYSTEM
B = With brake
M = With brake and manual unlock

8 CONNECTIONS
S = Left side (Standard)
D = Right side
F = Front side
P = Rear side

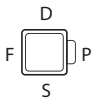

9 PRODUCT REVISION
Assigned by UNIVER

10 ATEX
X = ATEX option
See ATEX Catalogue for types and versions

O | Horizontal 90°

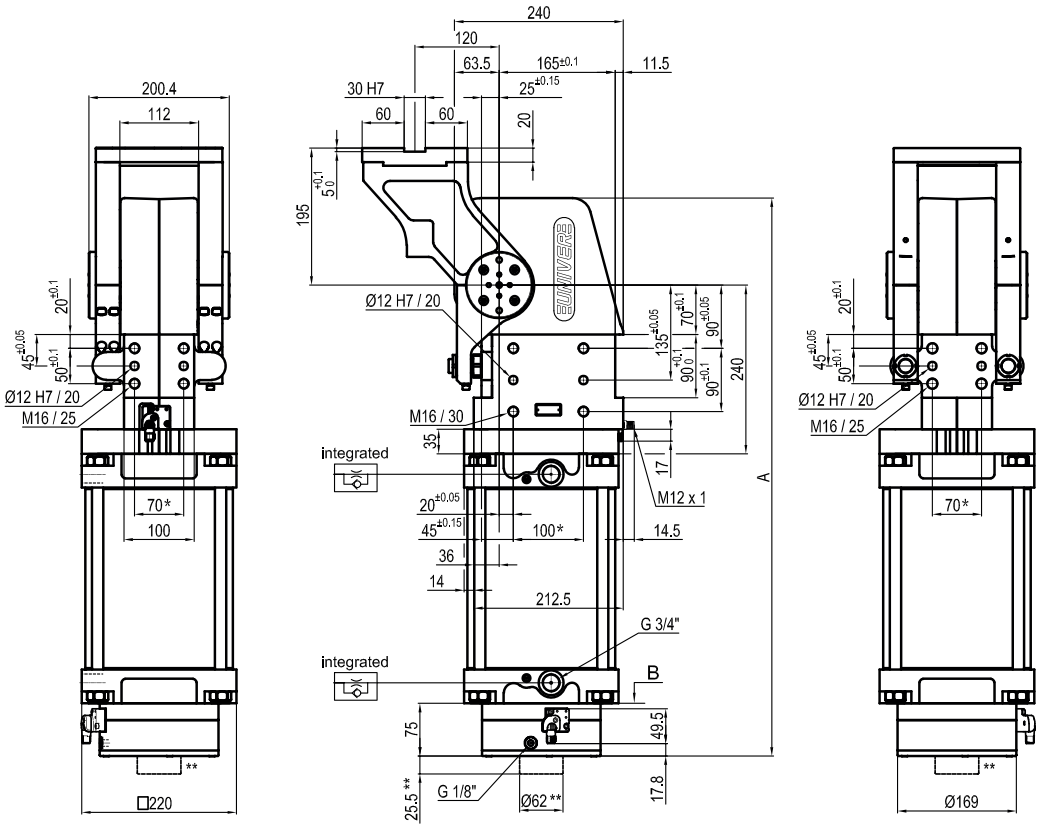

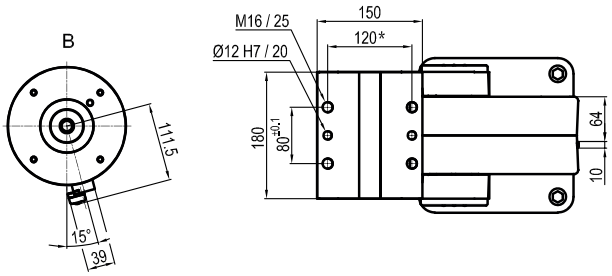

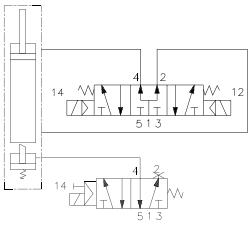

Pivot rotation (°)	A
45°	702
60°	718
90°	755
120°	794

**TOLERANCE BETWEEN DOWELS ± 0,02 BETWEEN SCREW HOLES ± 0,1*
***VERSION WITH BRAKE UNLOCK "M"*

Sensors

Body

Electronic (optical)

DF-K PNP M12
DF-J NPN M12
DF-Y PNP M12 White LED

Brake

Electronic

DF-S PNP M12

P Horizontal
Mirror of "**O**" position

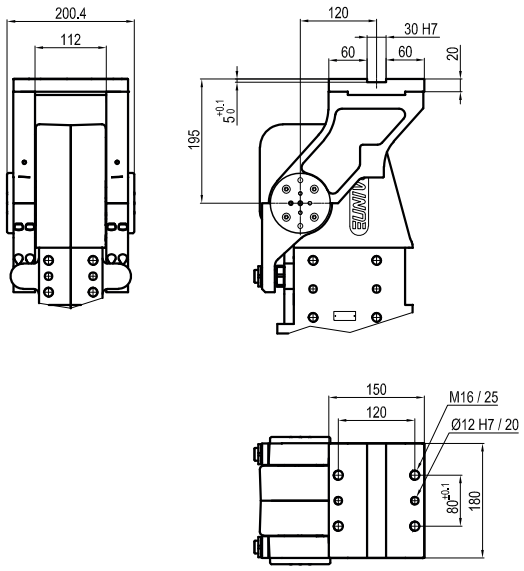

V Vertical 180°

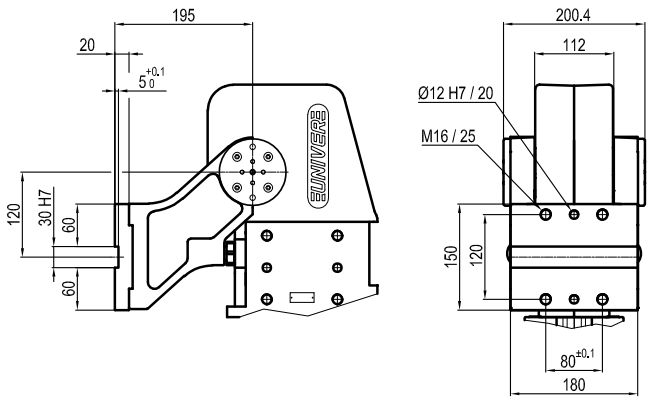

Z Vertical
Mirror of "**V**" position

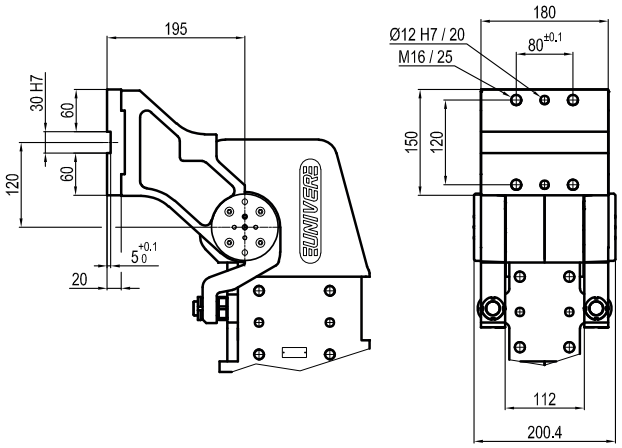

UAGP 605

Pneumatic power pivot 600 Nm with brake

Pneumatic power pivot with brake typically used to rotate and dump fixtures and parts in a desired position.

- High repeatability
- Mechanical stops
- Integrated flow control system
- Double pneumatic cushioning
- Fixing ports on 4 sides
- Tapered roller bearings to support heavy load
- Orientable table in 4 pre-set positions
- Version with sensor on the brake available

CHARACTERISTICS

Operating temperature	**5° ÷ 45° C**
Min./Max. Operating pressure	**0,4 / 0,6 MPa**
Bore Ø	**200 mm**
Pivot rotation	**45°/60°/90°/120°**
Holding moment	**8000 Nm**
Max. torque at rotary table (0,55MPa)	**600 Nm**
Weight	**59,9 kg**
Pneumatic supply ports	**G3/4**
Body sensor	**electronic (optical)**
Brake sensor	**electronic**
Supply voltage	**10 ÷ 30 Vdc**
IP code	**IP 65**

OPTICAL SENSOR

FLOW CONTROL SYSTEM

HIGH REPEATABILITY

CODIFICATION KEY

UAG	P	605	O	A	090	B	S	0	
1	2	3	4	5	6	7	8	9	10

1 SERIES
UAG = UNICLAMP Power pivot

2 VERSION
P = Pneumatic

3 SIZE
605 = 600 Nm Ø 200 mm

4 TABLE POSITION
O = Horizontal 90°
P = Horizontal mirror of "O"*
V = Vertical 180°
Z = Vertical mirror of "V"
*Max opening angle 60°

5 SENSOR
N = No sensor (with protection plate)
K = Electronic sensor PNP, M12 (DF-K)
Y = Electronic sensor PNP, M12 (DF-Y) white LED
J = Electronic sensor NPN, M12 (DF-J)
A = Electronic sensor PNP, optical for opening angle, M12 (DF-K) + brake sensor (DF-S)

6 PIVOT ROTATION
120 = 120°
090 = 90°
060 = 60°
045 = 45°

7 BRAKE SYSTEM
B = With brake
M = With brake and manual unlock

8 CONNECTIONS
S = Left side (Standard)
D = Right side
F = Front side
P = Rear side

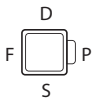

9 PRODUCT REVISION
Assigned by UNIVER

10 ATEX
X = ATEX option
See ATEX Catalogue for types and versions

O | Horizontal 90°

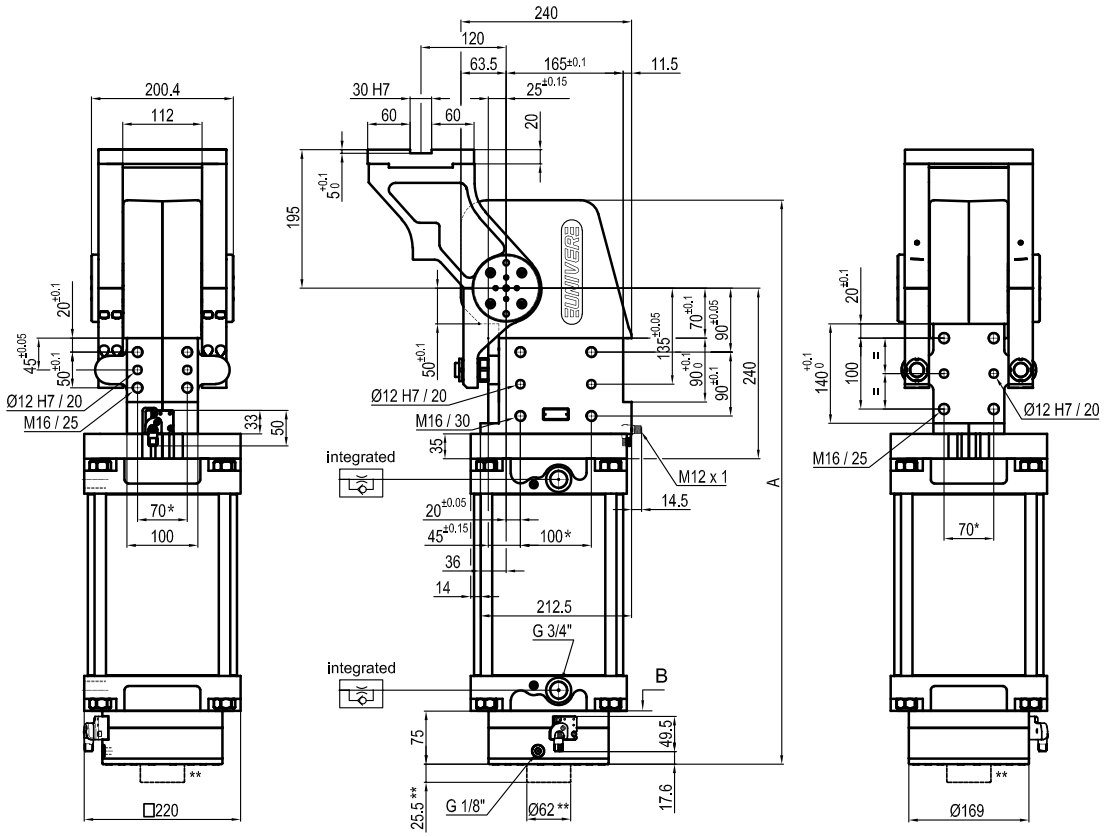

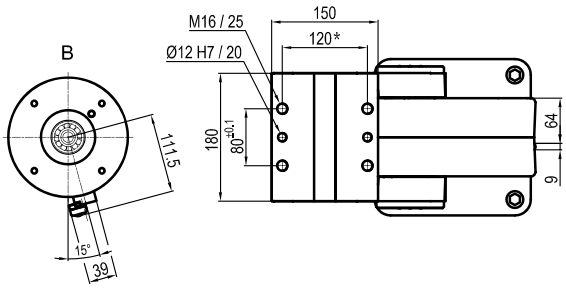

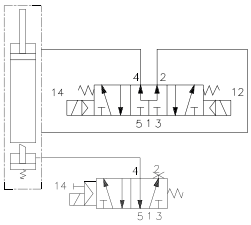

Pivot rotation (°)	A
45°	702
60°	718
90°	755
120°	794

**TOLERANCE BETWEEN DOWELS ± 0,02 BETWEEN SCREW HOLES ± 0,1*
***VERSION WITH BRAKE UNLOCK "M"*

Sensors

Body

Electronic (optical)

DF-K PNP M12
DF-J NPN M12
DF-Y PNP M12 White LED

Brake

Electronic

DF-S PNP M12

P Horizontal
Mirror of "**O**" position

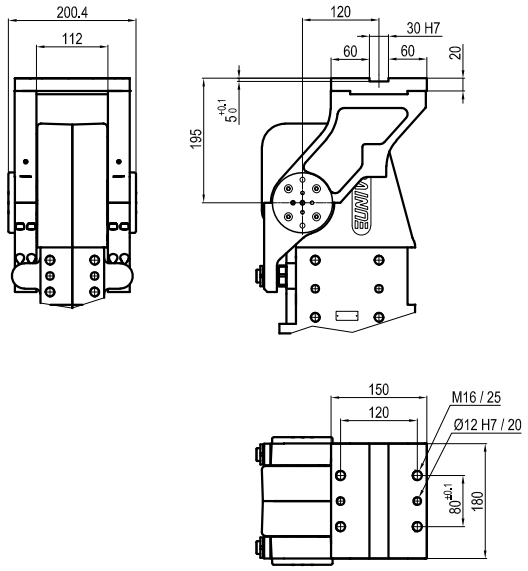

V Vertical 180°

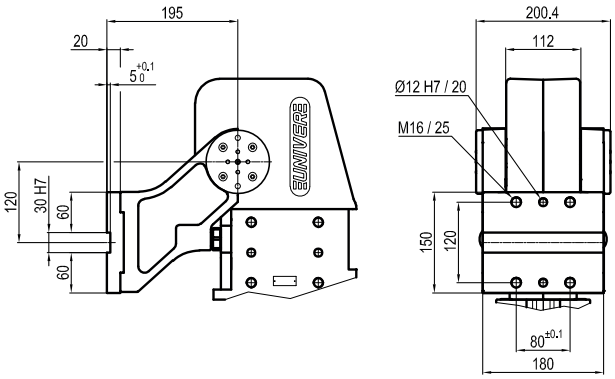

Z Vertical
Mirror of "**V**" position

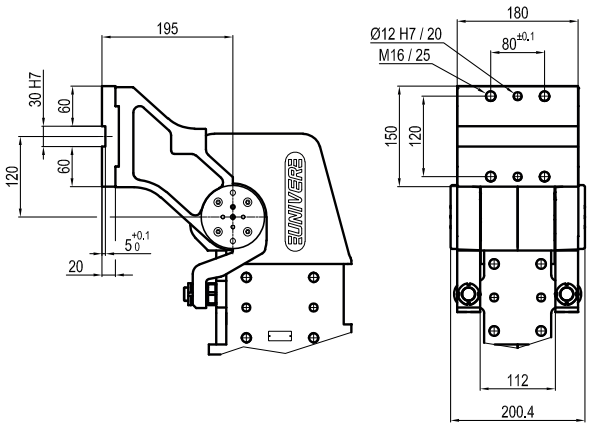

UAGR 063

Adjustable pneumatic power pivot 16 Nm without brake

Adjustable pneumatic power pivot without brake typically used to rotate and dump fixtures and parts in a desired position.

- High repeatability
- Mechanical stops
- Double pneumatic cushioning
- Fixing ports on 4 sides
- Roller bearings to support heavy load
- Orientable table in 4 pre-set positions
- 120° adjustable pivot rotation

CHARACTERISTICS

Operating temperature	**5° ÷ 45° C**
Min./Max. Operating pressure	**0,4 / 0,6 MPa**
Bore Ø	**63 mm**
Pivot rotation	**0°÷120°**
Holding moment	**1500 Nm**
Max. torque at rotary table (0,55MPa)	**16 Nm**
Weight	**5 kg**
Pneumatic supply ports	**G1/4**
Sensor	**electronic (optical)**
Supply voltage	**10 ÷ 30 Vdc**
IP code	**IP 65**

OPTICAL SENSOR

HIGH REPEATABILITY

ANGLE ADJUSTMENT

CODIFICATION KEY

UAG	R	063	**O**	K	**OR**	W	0	
1	2	3	4	5	6	7	8	9

1 SERIES
UAG = UNICLAMP Power pivot

2 VERSION
R = Pneumatic adjustable

3 SIZE
063 = 16 Nm Ø 63 mm

4 TABLE POSITION
O = Horizontal 90° *
P = Horizontal mirror of "O" **
V = Vertical 180°
Z = Vertical mirror of "V"

*Max opening angle 105°
**Max opening angle 60°

5 SENSOR
N = No sensor (with protection plate)
K = Electronic sensor PNP, M12 (DF-K)
Y = Electronic sensor PNP, M12 (DF-Y) white LED
J = Electronic sensor NPN, M12 (DF-J)

6 PIVOT ROTATION
OR = 120° adjustable

7 BRAKE SYSTEM
W = Without brake

8 PRODUCT REVISION
Assigned by UNIVER

9 ATEX
X = ATEX option
See ATEX Catalogue for types and versions

O | Horizontal 90°

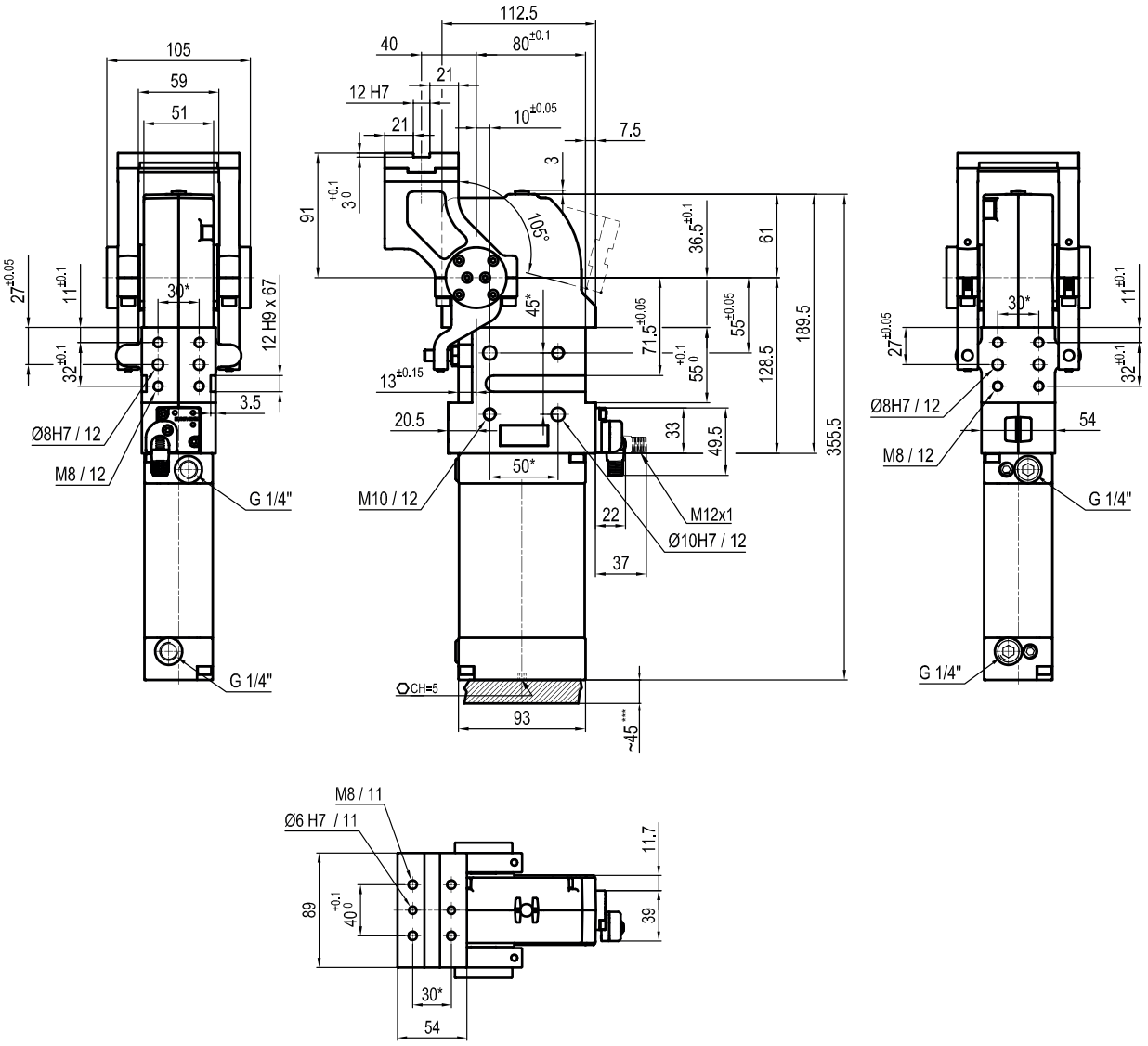

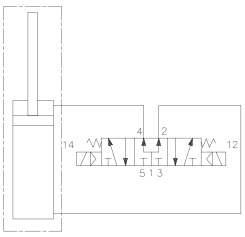

**TOLERANCE BETWEEN DOWELS ± 0,02 BETWEEN SCREW HOLES ± 0,1*

Sensors

Electronic (optical)

DF-K PNP M12
DF-J NPN M12
DF-Y PNP M12 White LED

P Horizontal
Mirror of "O" position

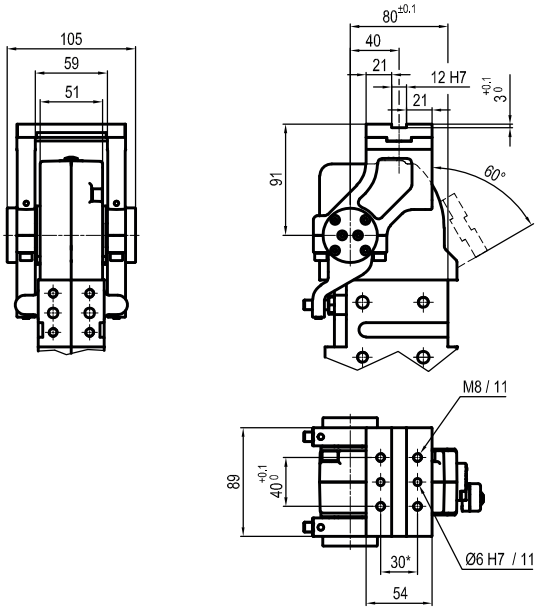

V Vertical 180°

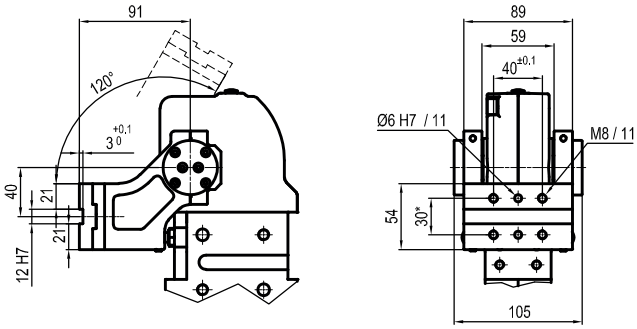

Z Vertical
Mirror of "V" position

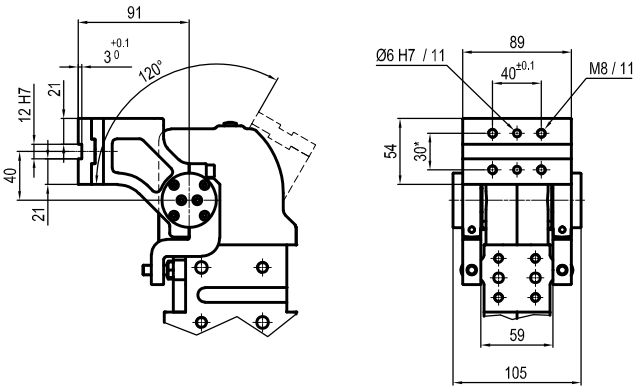

6

UNICLAMP

PNEUMATIC PIN CLAMPS

Ø32-63mm

USP32 2
USP50 5
USP63 9

Orientable hook Ø50mm

USS50 11

High compensation Ø63mm

USS63 14

Laser beam applications Ø50mm

USSL50 17

Compact Ø40mm

USC40 20
USR40 22

Vanishing hook Ø50mm

UST50 25

Horizontal Ø50mm

USP50U 27

Vanishing hook and pin Ø63mm

LUP63 29

Manual Ø50mm

USL50 31

USP 32

Pneumatic pin clamp Ø32 mm

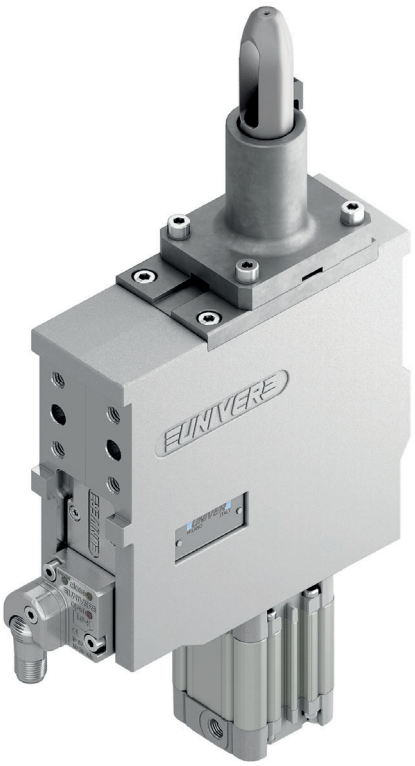

Pneumatic pin clamps mainly designed for centring and clamping metal sheets in BIW underbody applications.

- Integrated compensation up to 1,2 mm
- Double metal scraper for protection against dust and welding debris
- Toggle-joint mechanism
- High repeatability
- High wear resistance steel pin
- Electronic sensor
- Available version with plate machined from solid (no shimming)

CHARACTERISTICS

Operating temperature	**5° ÷ 45° C**
Min./Max. Operating pressure	**0,4 / 0,6 MPa**
Bore Ø	**32 mm**
Clamping force	**1500 N**
Weight (without plate, pin and hook)	**2,6 kg**
Pneumatic supply ports	**G1/8**
Sensor	**electronic (optical)**
Supply voltage	**10 ÷ 30 Vdc**
IP code	**IP 65**

IRREVERSIBLE

LIGHTWEIGHT

COMPENSATION

METAL SCRAPER

OPTICAL SENSOR

HIGH REPEATABILITY

CODIFICATION KEY

US	P	32	J	3	1	-	K	0	
1	2	3	4	5	6	7	8	9	10

1 SERIES
US = UNICLAMP Pin clamp with compensation

2 VERSION
P = Pneumatic

3 SIZE
32 = Ø32 mm

4 MODEL
J = Standard
R = With mechanical locking/unlocking device

5 PIN DIAMETER
1< = Ø18 mm
2 = Ø20 mm
3 = Ø25 mm
4 = Ø30 mm
5 = Ø35 mm
6 = Ø40 mm
For pin Ø outside the mentioned range, please contact our sales department

6 LOCATING PIN
0 = Locating pin not included
1 = Locating pin included

7 PROGRESSIVE NUMBERING
Progressive numbers for special products are assigned by the Sales Department

8 SENSOR
N = No sensor (with protection plate)
K = Electronic sensor PNP, M12 (DF-K)
J = Electronic sensor NPN, optical (DF-J)
Y = Electronic sensor PNP, M12 (DF-Y) white LED

9 PRODUCT REVISION
Assigned by UNIVER

10 ATEX
X = ATEX option
See ATEX Catalogue for types and versions

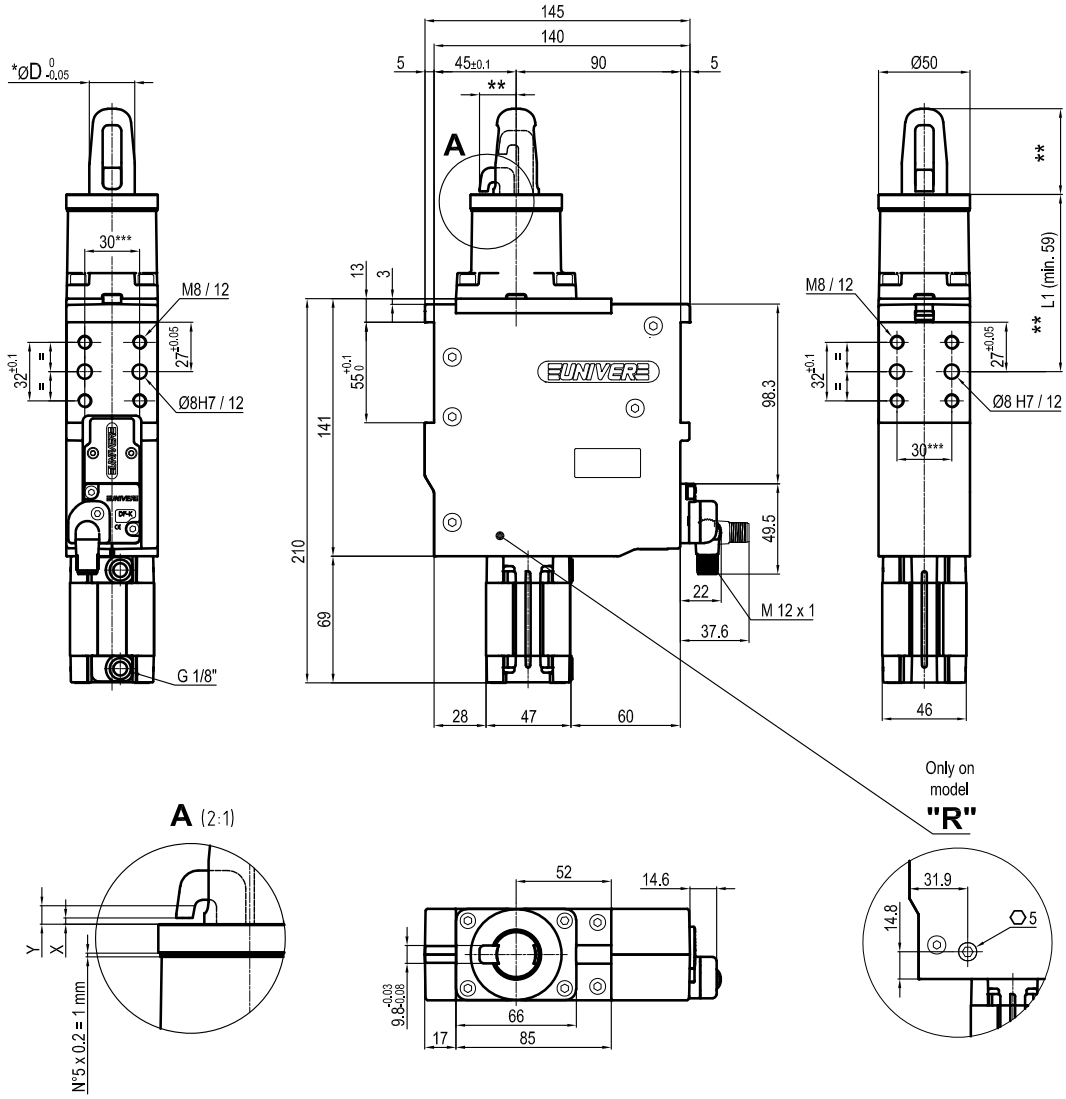

*Pin Option	ØD
1	18
2	20
3	25
4	30
5	35
6	40

X = *Metal sheet*
Y = *Clamping range (X + 1,2 mm Max.)*
VERSION WITHOUT PIN AND HOOK AVAILABLE UPON REQUEST
*** MISSING DIMENSION TO BE DEFINED ACCORDING TO CUSTOMER SPECIFICATIONS*
**** TOLERANCE BETWEEN DOWEL HOLES ± 0,02, BETWEEN SCREW HOLES ± 0,1*

Sensors

Electronic (optical)

DF-K PNP M12
DF-J NPN M12
DF-Y PNP M12 White LED

Version with plate machined from solid (no shimming)

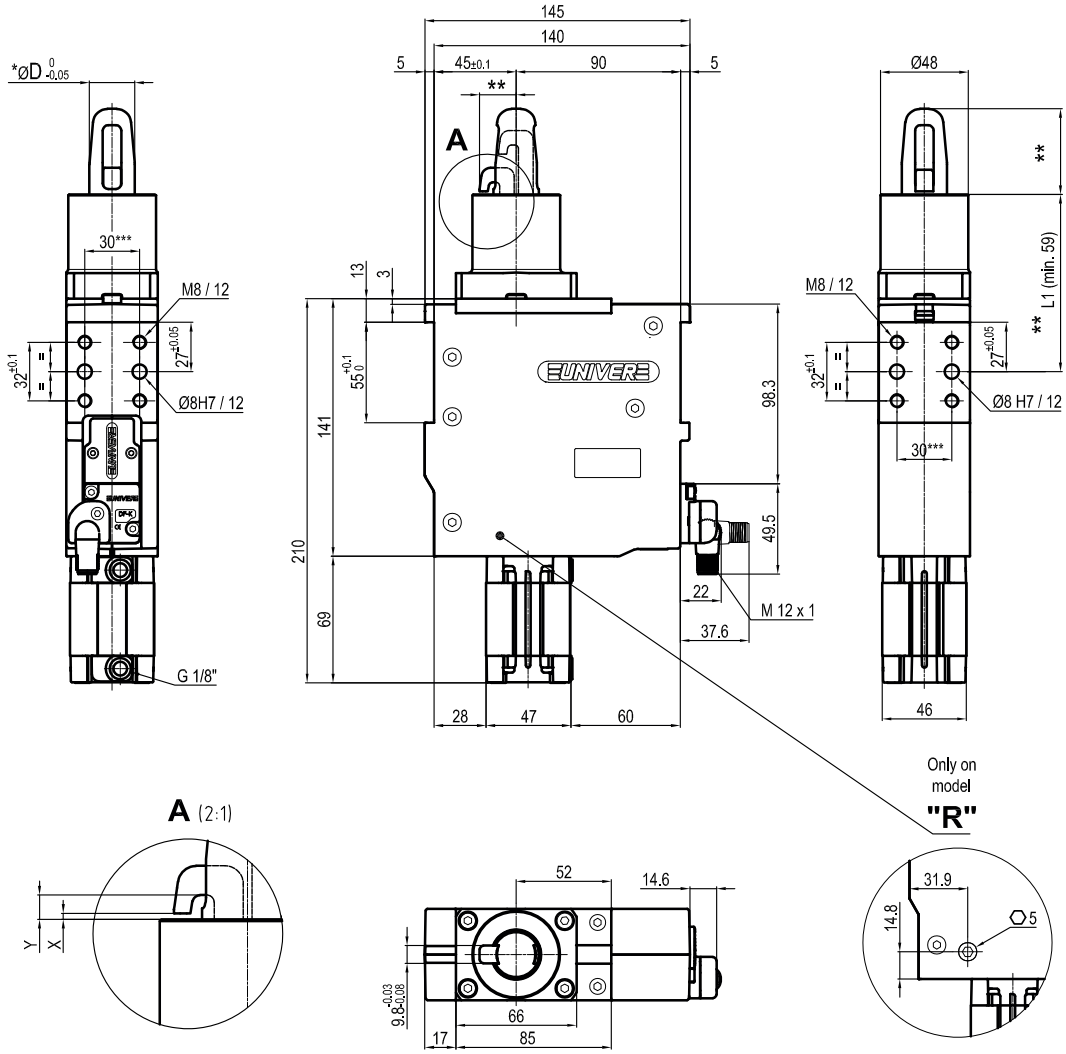

*Pin Option	ØD
1	18
2	20
3	25
4	30
5	35
6	40

X = *Metal sheet*
Y = *Clamping range (X + 1,2 mm Max.)*
VERSION WITHOUT PIN AND HOOK AVAILABLE UPON REQUEST
*** MISSING DIMENSION TO BE DEFINED ACCORDING TO CUSTOMER SPECIFICATIONS*
**** TOLERANCE BETWEEN DOWEL HOLES ± 0,02, BETWEEN SCREW HOLES ± 0,1*

Sensors

Electronic (optical)

DF-K PNP M12
DF-J NPN M12
DF-Y PNP M12 White LED

USP 50

Pneumatic pin clamp Ø50 mm

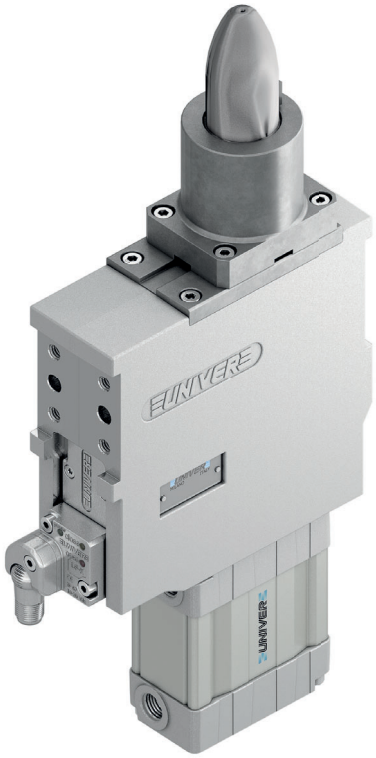

Pneumatic pin clamps mainly designed for centring and clamping metal sheets in BIW underbody applications.

- Integrated compensation up to 2,3 mm
- Double metal scraper for protection against dust and welding debris
- Toggle-joint mechanism
- High repeatability
- High wear resistance steel pin
- Electronic sensor
- Available version with plate machined from solid (no shimming)

CHARACTERISTICS

Operating temperature	**5° ÷ 45° C**
Min./Max. Operating pressure	**0,4 / 0,6 MPa**
Bore Ø	**50 mm**
Clamping force	**3500 N**
Weight (without plate, pin and hook)	**2,9 kg**
Pneumatic supply ports	**G1/4 on both sides**
Sensor	**electronic (optical)**
Supply voltage	**10 ÷ 30 Vdc**
IP code	**IP 65**

6

IRREVERSIBLE

LIGHTWEIGHT

COMPENSATION

METAL SCRAPER

OPTICAL SENSOR

HIGH REPEATABILITY

CODIFICATION KEY

US	P	50	J	3	1	-	K	0	
1	2	3	4	5	6	7	8	9	

1 SERIES
US = UNICLAMP Pin clamp with compensation

2 VERSION
P = Pneumatic

3 SIZE
50 = Ø50 mm

4 MODEL
J = Standard
R = With mechanical locking/unlocking device

5 PIN DIAMETER
1< = Ø18 mm
2 = Ø20 mm
3 = Ø25 mm
4 = Ø30 mm
5 = Ø35 mm
6 = Ø40 mm
For pin Ø outside the mentioned range, please contact our sales department

6 LOCATING PIN
0 = Locating pin not included
1 = Locating pin included

7 PROGRESSIVE NUMBERING
Progressive numbers for special products are assigned by the Sales Department

8 SENSOR
N = No sensor (with protection plate)
K = Electronic sensor PNP, M12 (DF-K)
J = Electronic sensor NPN, optical (DF-J)
Y = Electronic sensor PNP, M12 (DF-Y) white LED

9 PRODUCT REVISION
Assigned by UNIVER

10 ATEX
X = ATEX option
See ATEX Catalogue for types and versions

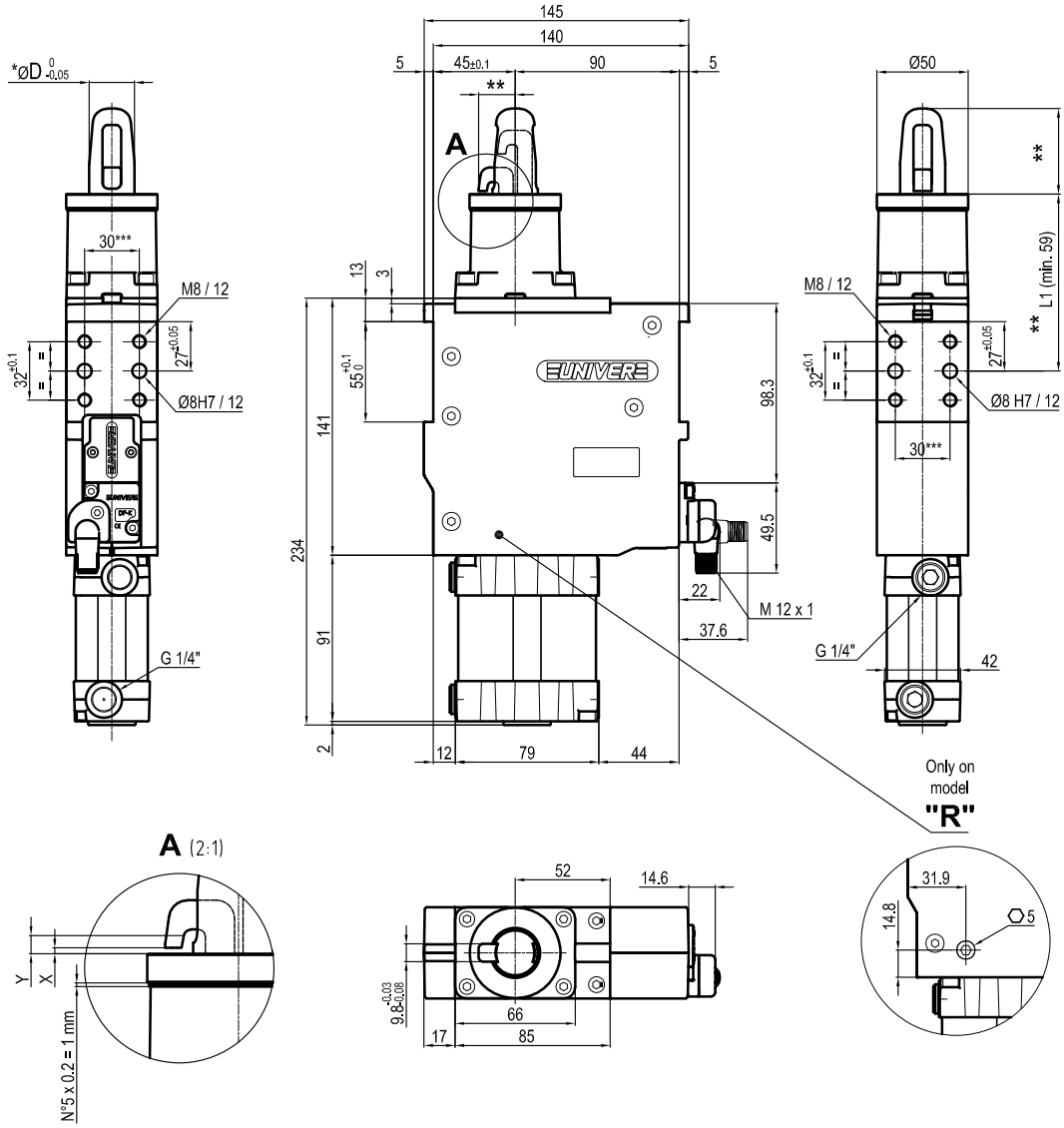

*Pin Option	ØD
1	18
2	20
3	25
4	30
5	35
6	40

X = *Metal sheet*
Y = *Clamping range (X + 2,3 mm Max.)*
VERSION WITHOUT PIN AND HOOK AVAILABLE UPON REQUEST
*** MISSING DIMENSION TO BE DEFINED ACCORDING TO CUSTOMER SPECIFICATIONS*
**** TOLERANCE BETWEEN DOWEL HOLES ± 0,02, BETWEEN SCREW HOLES ± 0,1*

Sensors

Electronic (optical)

DF-K PNP M12
DF-J NPN M12
DF-Y PNP M12 White LED

Version with plate machined from solid (no shimming)

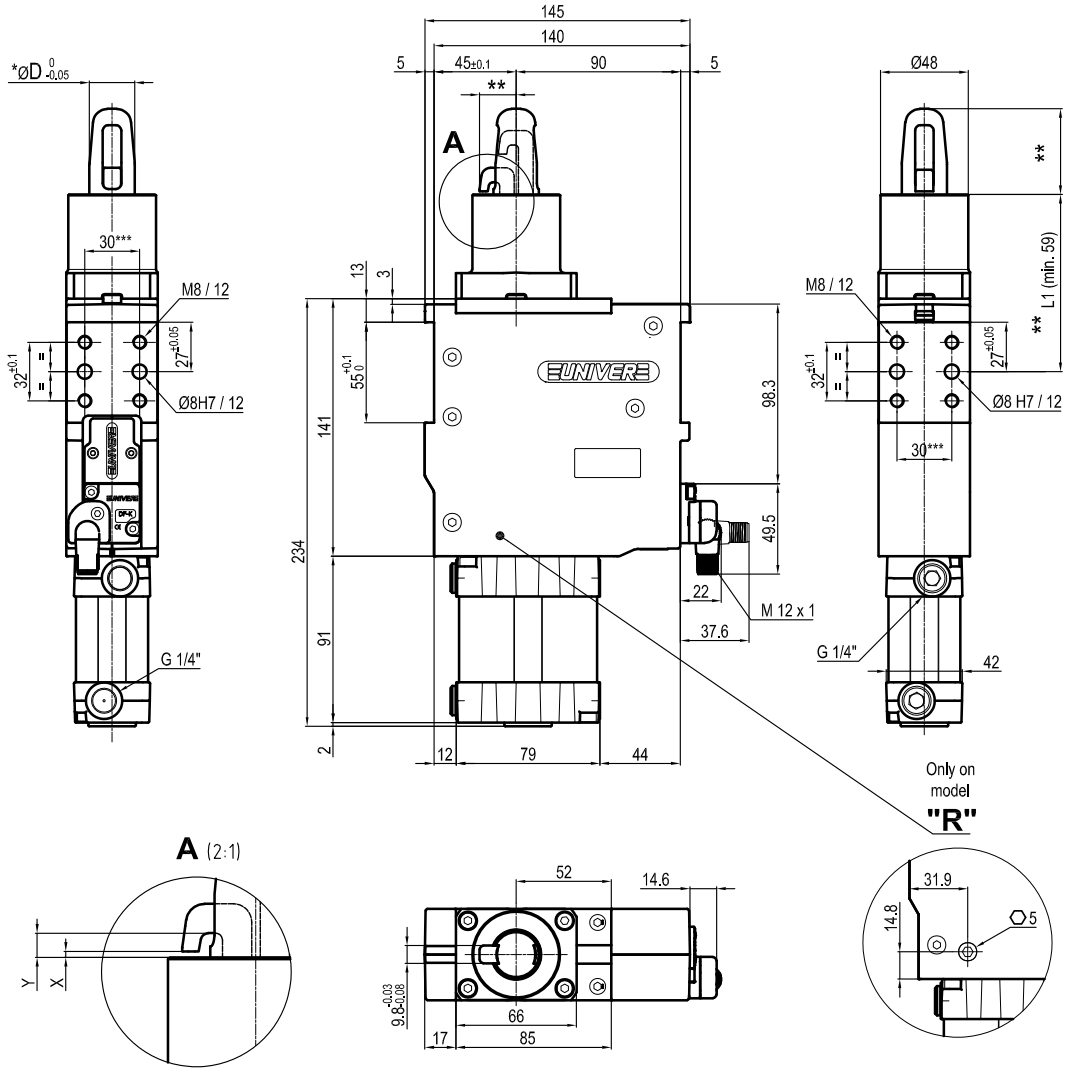

*Pin Option	ØD
1	18
2	20
3	25
4	30
5	35
6	40

X = *Metal sheet*
Y = *Clamping range (X + 2,3 mm Max.)*
VERSION WITHOUT PIN AND HOOK AVAILABLE UPON REQUEST
*** MISSING DIMENSION TO BE DEFINED ACCORDING TO CUSTOMER SPECIFICATIONS*
**** TOLERANCE BETWEEN DOWEL HOLES ± 0,02, BETWEEN SCREW HOLES ± 0,1*

Sensors

Electronic (optical)

DF-K PNP M12
DF-J NPN M12
DF-Y PNP M12 White LED

USP 63

Pneumatic pin clamp Ø63 mm, high compensation

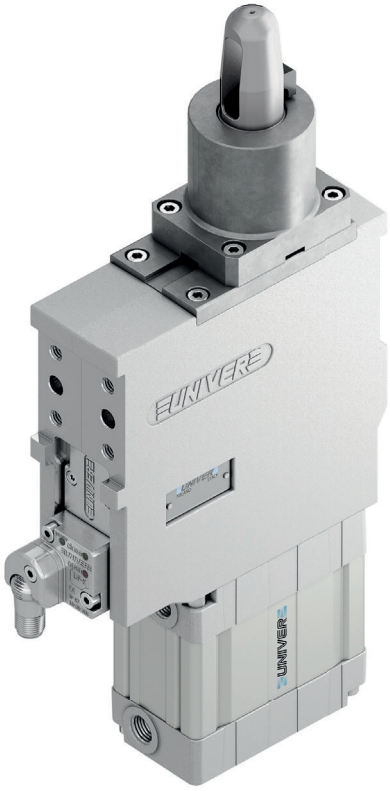

Pneumatic pin clamps with high compensation system mainly designed for centering and clamping metal sheets in BIW underbody applications.

- Integrated compensation up to 6 mm
- Double metal scraper for protection against dust and welding debris
- Toggle-joint mechanism
- High repeatability
- High wear resistance steel pin
- Electronic sensor
- Available version with plate machined from solid (no shimming)

CHARACTERISTICS

Operating temperature	**5° ÷ 45° C**
Min./Max. Operating pressure	**0,4 / 0,6 MPa**
Bore Ø	**63 mm**
Clamping force	**3500 N**
Weight (without plate, pin and hook)	**3,1kg**
Pneumatic supply ports	**G1/4 on both sides**
Sensor	**electronic (optical)**
Supply voltage	**10 ÷ 30 Vdc**
IP code	**IP 65**

IRREVERSIBLE

LIGHTWEIGHT

COMPENSATION

METAL SCRAPER

OPTICAL SENSOR

HIGH REPEATABILITY

CODIFICATION KEY

US	P	63	J	3	1	-	K	0	
1	2	3	4	5	6	7	8	9	10

1 SERIES
US = UNICLAMP Pin clamp with compensation

2 VERSION
P = Pneumatic

3 SIZE
63 = Ø63 mm

4 MODEL
J = Standard
R = With mechanical locking/unlocking device

5 PIN DIAMETER
1< = Ø18 mm
2 = Ø20 mm
3 = Ø25 mm
4 = Ø30 mm
5 = Ø35 mm
6 = Ø40 mm
For pin Ø outside the mentioned range, please contact our sales department

6 LOCATING PIN
0 = Locating pin not included
1 = Locating pin included

7 PROGRESSIVE NUMBERING
Progressive numbers for special products are assigned by the Sales Department

8 SENSOR
N = No sensor (with protection plate)
K = Electronic sensor PNP, M12 (DF-K)
J = Electronic sensor NPN, optical (DF-J)
Y = Electronic sensor PNP, M12 (DF-Y) white LED

9 PRODUCT REVISION
Assigned by UNIVER

10 ATEX
X = ATEX option
See ATEX Catalogue for types and versions

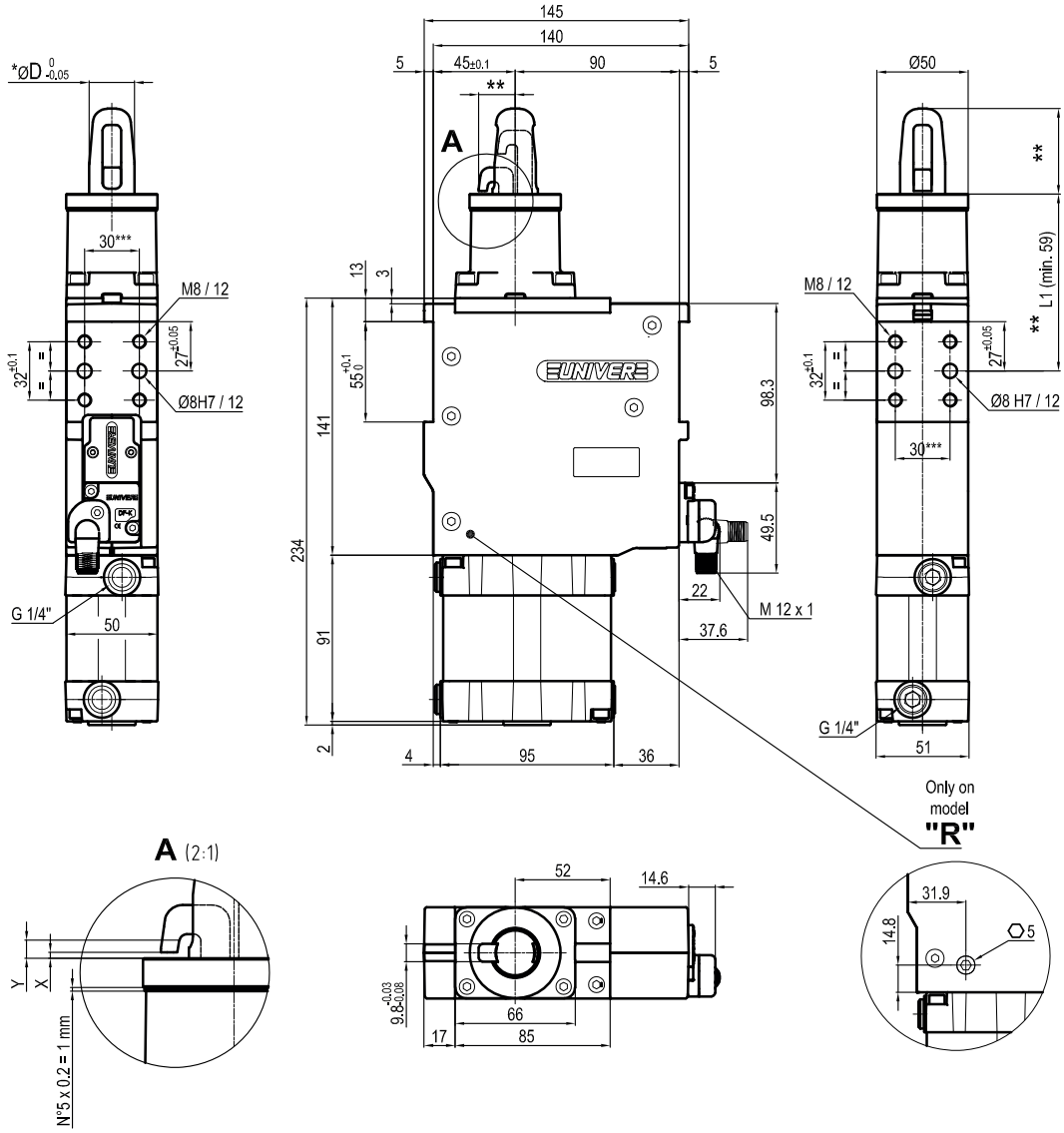

*Pin Option	ØD
1	18
2	20
3	25
4	30
5	35
6	40

X = *Metal sheet*
Y = *Clamping range (X + 6 mm Max.)*
VERSION WITHOUT PIN AND HOOK AVAILABLE UPON REQUEST
*** MISSING DIMENSION TO BE DEFINED ACCORDING TO CUSTOMER SPECIFICATIONS*
**** TOLERANCE BETWEEN DOWEL HOLES ± 0,02, BETWEEN SCREW HOLES ± 0,1*

Sensors

Electronic (optical)

DF-K PNP M12
DF-J NPN M12
DF-Y PNP M12 White LED

Version with plate machined from solid (no shimming)

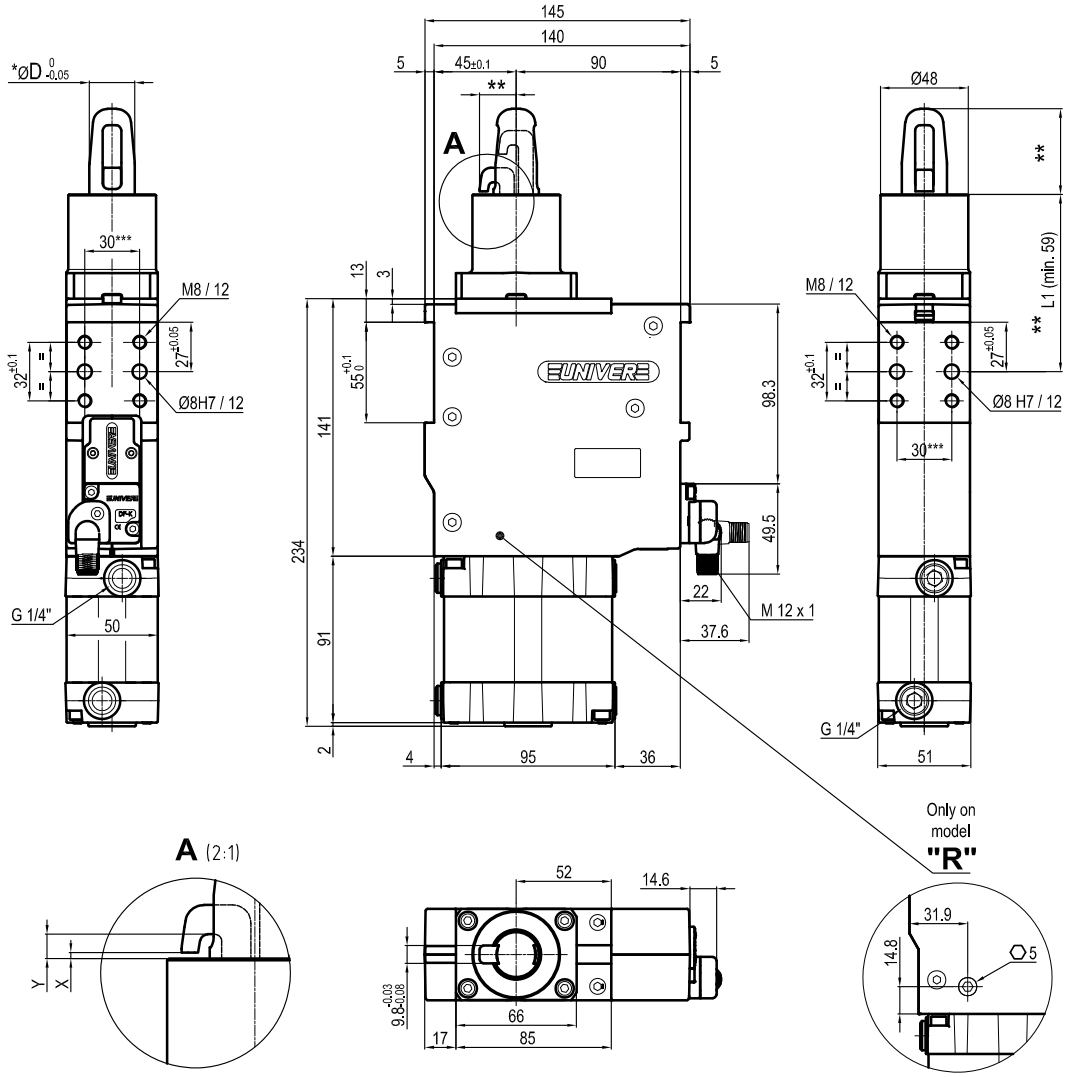

*Pin Option	ØD
1	18
2	20
3	25
4	30
5	35
6	40

X = *Metal sheet*
Y = *Clamping range (X + 6 mm Max.)*
VERSION WITHOUT PIN AND HOOK AVAILABLE UPON REQUEST
*** MISSING DIMENSION TO BE DEFINED ACCORDING TO CUSTOMER SPECIFICATIONS*
**** TOLERANCE BETWEEN DOWEL HOLES ± 0,02, BETWEEN SCREW HOLES ± 0,1*

Sensors

Electronic (optical)

DF-K PNP M12
DF-J NPN M12
DF-Y PNP M12 White LED

USS 50

Pneumatic pin clamp Ø50 mm, orientable hook

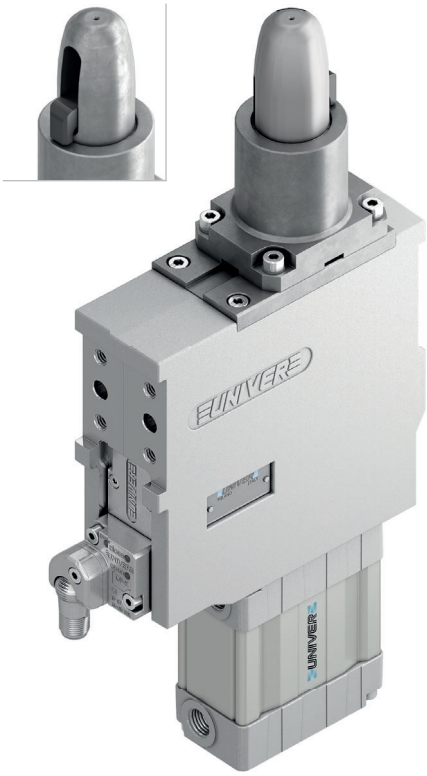

Pneumatic pin clamps with orientable hook position and high compensation system mainly designed for centering and clamping metal sheets in BIW underbody applications.

- Integrated compensation up to 2,3 mm
- Double metal scraper for protection against dust and welding debris
- Toggle-joint mechanism
- High repeatability
- High wear resistance steel pin
- Electronic sensor
- Hook position: 0/180°
- Available version with plate machined from solid (no shimming)

CHARACTERISTICS

Operating temperature	**5° ÷ 45° C**
Min./Max. Operating pressure	**0,4 / 0,6 MPa**
Bore Ø	**50 mm**
Clamping force	**3500 N**
Weight (without plate, pin and hook)	**2,9 kg**
Pneumatic supply ports	**G1/4 on both sides**
Sensor	**electronic (optical)**
Supply voltage	**10 ÷ 30 Vdc**
IP code	**IP 65**

IRREVERSIBLE

LIGHTWEIGHT

COMPENSATION

METAL SCRAPER

OPTICAL SENSOR

HIGH REPEATABILITY

0/180°

CODIFICATION KEY

US	S	50	J	B	1	0	-	K	0	
1	2	3	4	5	6	7	8	9	10	11

1 SERIES
US = UNICLAMP Pin clamp with compensation

2 VERSION
S = Pneumatic with orientable hook

3 SIZE
50 = Ø50 mm

4 MODEL
J = Standard
R = With mechanical locking/unlocking device

5 HOOK POSITION
B = Standard
C = Rotated by 180°

6 PIN DIAMETER
1< = Ø18 mm
2 = Ø20 mm
3 = Ø25 mm
4 = Ø30 mm
5 = Ø35 mm
6 = Ø40 mm
For pin Ø outside the mentioned range, please contact our sales department

7 LOCATING PIN
0 = Locating pin not included
1 = Locating pin included

8 PROGRESSIVE NUMBERING
Progressive numbers for special products are assigned by the Sales Department

9 SENSOR
N = No sensor (with protection plate)
K = Electronic sensor PNP, M12 (DF-K)
J = Electronic sensor NPN, optical (DF-J)
Y = Electronic sensor PNP, M12 (DF-Y) white LED

10 PRODUCT REVISION
Assigned by UNIVER

11 ATEX
X = ATEX option
See ATEX Catalogue for types and versions

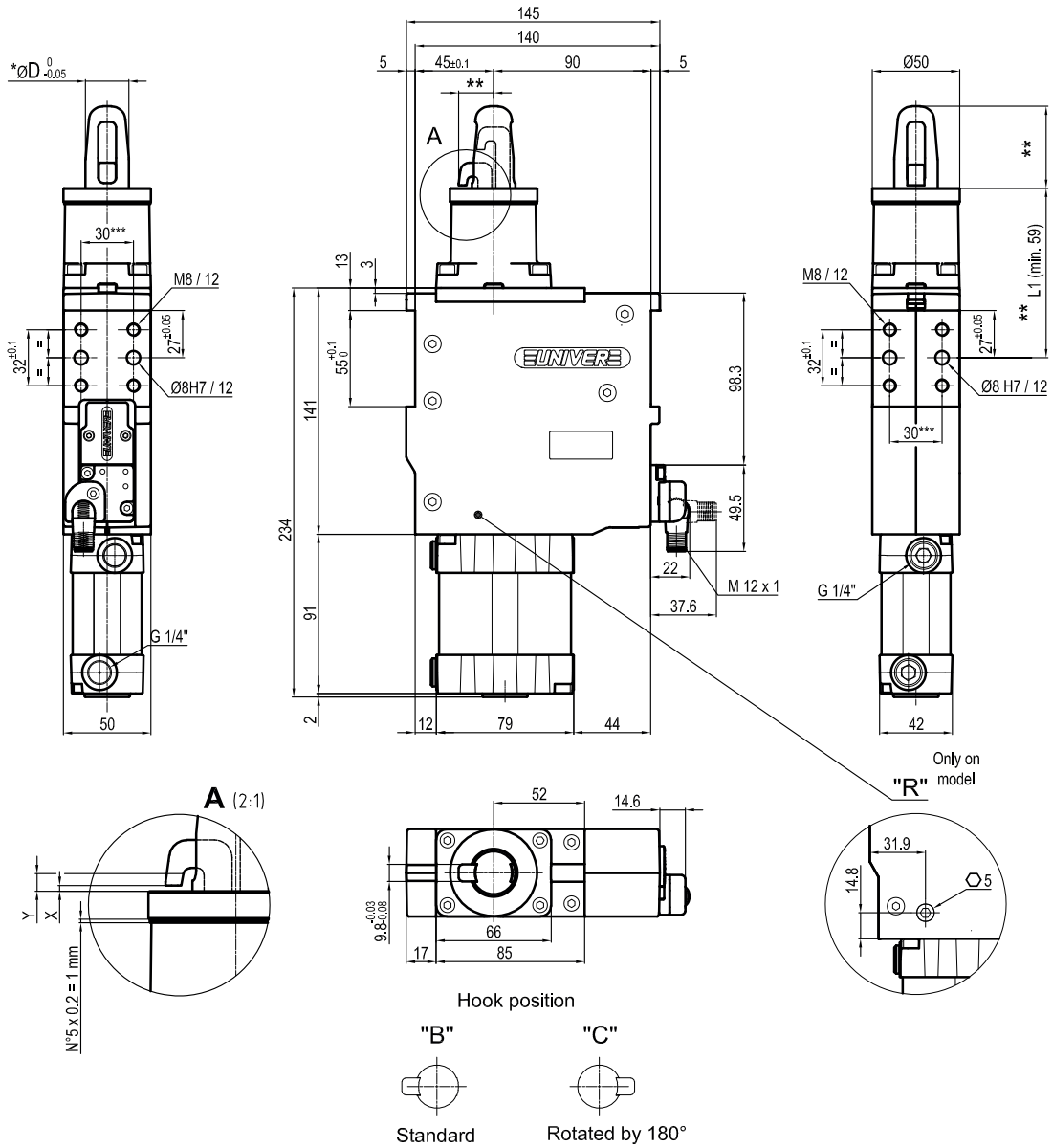

*Pin Option	ØD
1	18
2	20
3	25
4	30
5	35
6	40

X = *Metal sheet*
Y = *Clamping range (X + 2,3 mm Max.)*
VERSION WITHOUT PIN AND HOOK AVAILABLE UPON REQUEST
*** MISSING DIMENSION TO BE DEFINED ACCORDING TO CUSTOMER SPECIFICATIONS*
**** TOLERANCE BETWEEN DOWEL HOLES ± 0,02, BETWEEN SCREW HOLES ± 0,1*

Sensors

Electronic (optical)

DF-K PNP M12
DF-J NPN M12
DF-Y PNP M12 White LED

Version with plate machined from solid (no shimming)

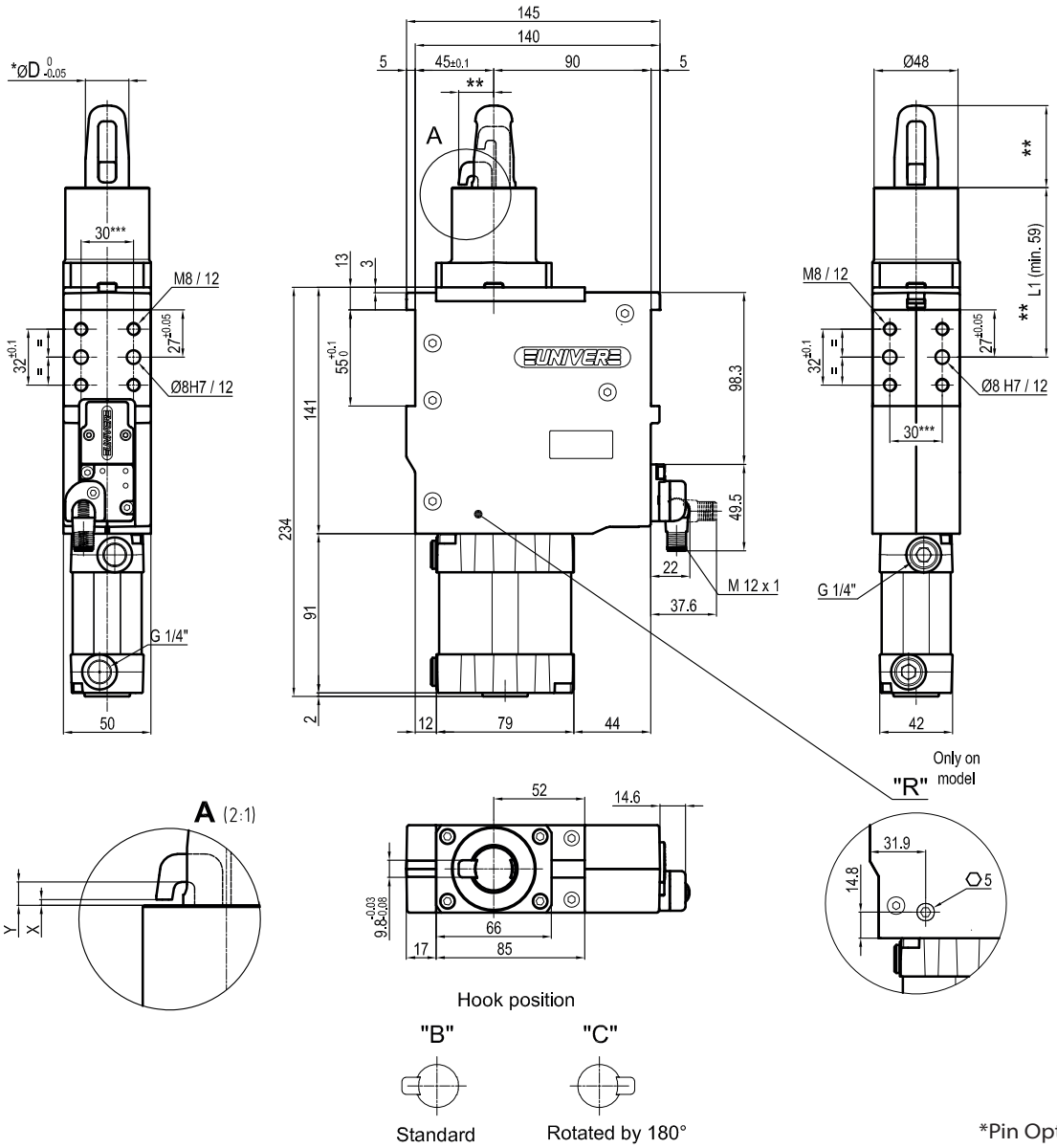

*Pin Option	ØD
1	18
2	20
3	25
4	30
5	35
6	40

X = *Metal sheet*
Y = *Clamping range (X + 2,3 mm Max.)*
VERSION WITHOUT PIN AND HOOK AVAILABLE UPON REQUEST
*** MISSING DIMENSION TO BE DEFINED ACCORDING TO CUSTOMER SPECIFICATIONS*
**** TOLERANCE BETWEEN DOWEL HOLES ± 0,02, BETWEEN SCREW HOLES ± 0,1*

Sensors

Electronic (optical)

DF-K PNP M12
DF-J NPN M12
DF-Y PNP M12 White LED

USS 63

Pneumatic pin clamp Ø63 mm, orientable hook, high compensation

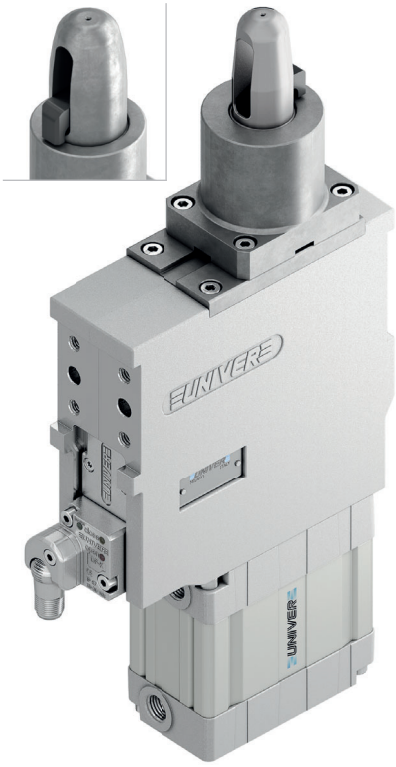

Pneumatic pin clamps with orientable hook position and high compensation system mainly designed for centering and clamping metal sheets in BIW underbody applications.

- Integrated compensation up to 6 mm
- Double metal scraper for protection against dust and welding debris
- Toggle-joint mechanism
- High repeatability
- High wear resistance steel pin
- Electronic sensor
- Hook position: 0/180°
- Available version with plate machined from solid (no shimming)

CHARACTERISTICS

Operating temperature	**5° ÷ 45° C**
Min./Max. Operating pressure	**0,4 / 0,6 MPa**
Bore Ø	**63 mm**
Clamping force	**3500 N**
Weight (without plate, pin and hook)	**3,1 kg**
Pneumatic supply ports	**G1/4 on both sides**
Sensor	**electronic (optical)**
Supply voltage	**10 ÷ 30 Vdc**
IP code	**IP 65**

IRREVERSIBLE

LIGHTWEIGHT

COMPENSATION

METAL SCRAPER

OPTICAL SENSOR

HIGH REPEATABILITY

0/180°

CODIFICATION KEY

US	S	63	J	B	1	0	-	K	0	
1	2	3	4	5	6	7	8	9	10	11

1 SERIES
US = UNICLAMP Pin clamp with compensation

2 VERSION
S = Pneumatic with orientable hook

3 SIZE
63 = Ø63 mm

4 MODEL
J = Standard
R = With mechanical locking/unlocking device

5 HOOK POSITION
B = Standard
C = Rotated by 180°

6 PIN DIAMETER
1< = Ø18 mm
2 = Ø20 mm
3 = Ø25 mm
4 = Ø30 mm
5 = Ø35 mm
6 = Ø40 mm
For pin Ø outside the mentioned range, please contact our sales department

7 LOCATING PIN
0 = Locating pin not included
1 = Locating pin included

8 PROGRESSIVE NUMBERING
Progressive numbers for special products are assigned by the Sales Department

9 SENSOR
N = No sensor (with protection plate)
K = Electronic sensor PNP, M12 (DF-K)
J = Electronic sensor NPN, optical (DF-J)
Y = Electronic sensor PNP, M12 (DF-Y) white LED

10 PRODUCT REVISION
Assigned by UNIVER

11 ATEX
X = ATEX option
See ATEX Catalogue for types and versions

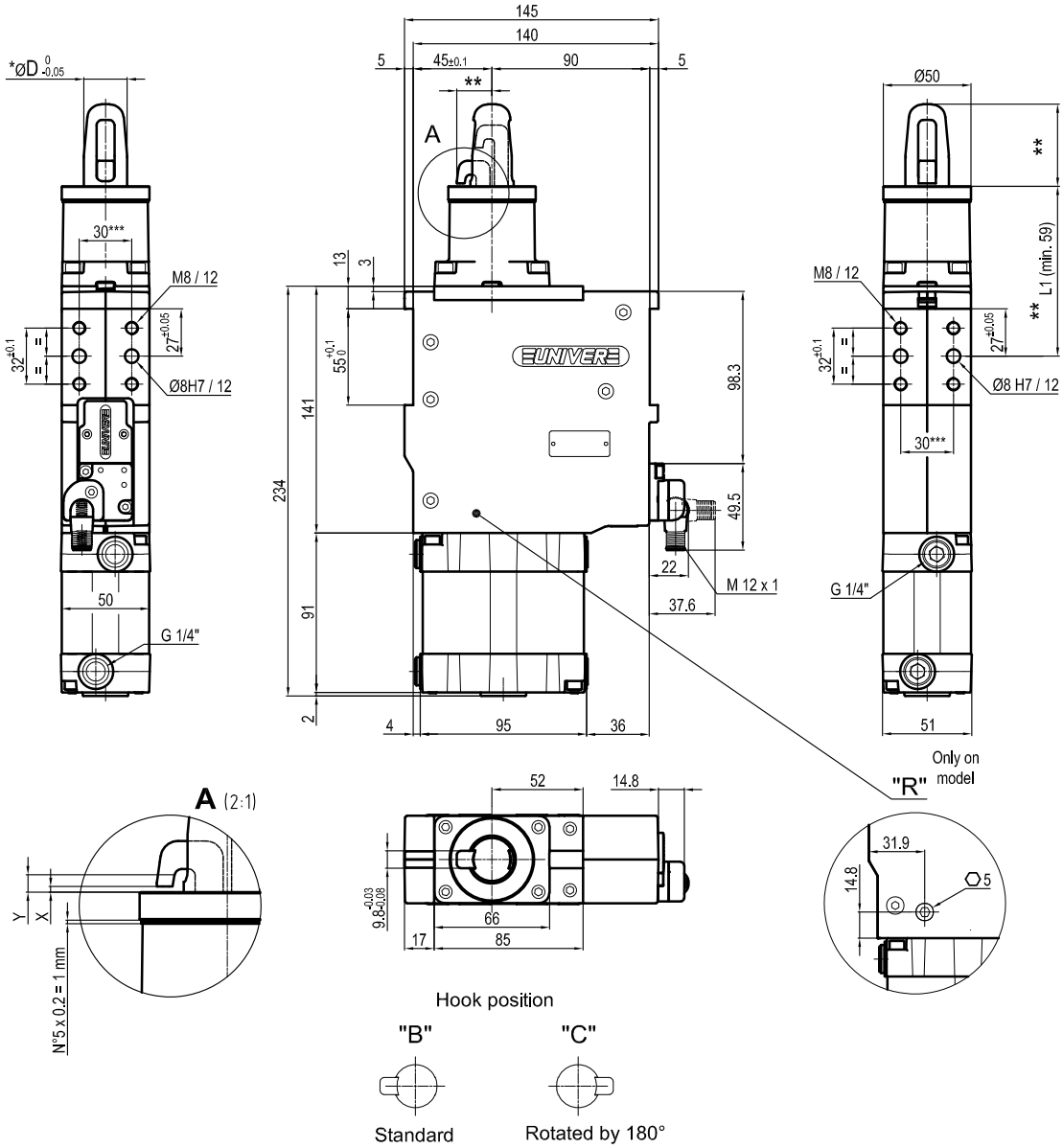

*Pin Option	ØD
1	18
2	20
3	25
4	30
5	35
6	40

X = *Metal sheet*
Y = *Clamping range (X + 6 mm Max.)*
VERSION WITHOUT PIN AND HOOK AVAILABLE UPON REQUEST
*** MISSING DIMENSION TO BE DEFINED ACCORDING TO CUSTOMER SPECIFICATIONS*
**** TOLERANCE BETWEEN DOWEL HOLES ± 0,02, BETWEEN SCREW HOLES ± 0,1*

Sensors

Electronic (optical)

DF-K PNP M12
DF-J NPN M12
DF-Y PNP M12 White LED

Version with plate machined from solid (no shimming)

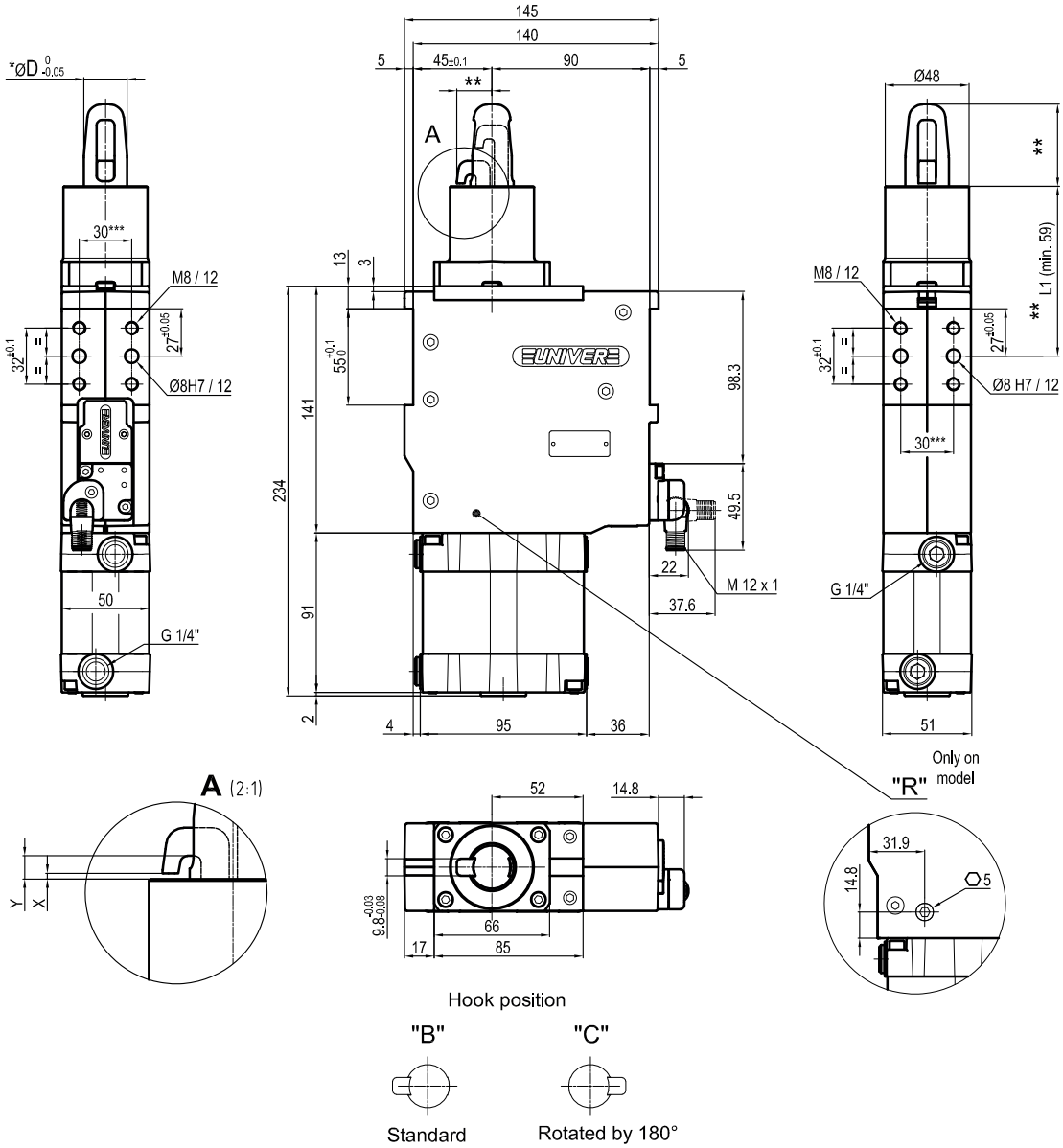

Hook position

"B" Standard

"C" Rotated by 180°

*Pin Option	ØD
1	18
2	20
3	25
4	30
5	35
6	40

X = *Metal sheet*
Y = *Clamping range (X + 6 mm Max.)*
VERSION WITHOUT PIN AND HOOK AVAILABLE UPON REQUEST
*** MISSING DIMENSION TO BE DEFINED ACCORDING TO CUSTOMER SPECIFICATIONS*
**** TOLERANCE BETWEEN DOWEL HOLES ± 0,02, BETWEEN SCREW HOLES ± 0,1*

Sensors

Electronic (optical)

DF-K PNP M12
DF-J NPN M12
DF-Y PNP M12 White LED

USSL 50

Pneumatic pin clamp for laser beam applications, orientable hook, Ø50 mm

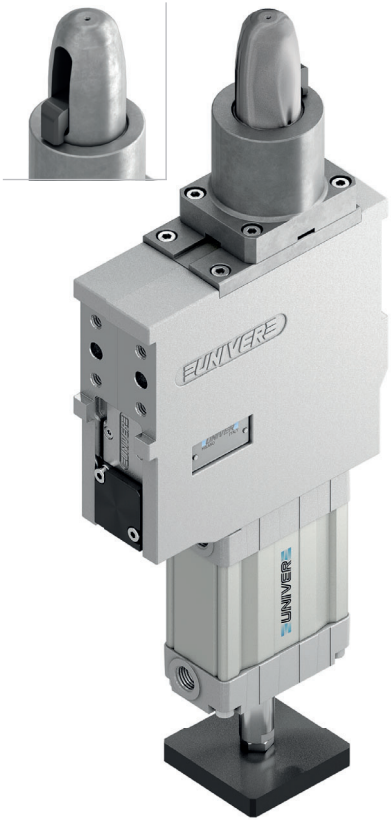

Pneumatic pin clamps for laser beam applications mainly designed for centering and clamping metal sheets in BIW underbody applications where the detection of the position is done by a laser beam instead of a position sensor

- Integrated compensation up to 2,3 mm
- Double metal scraper for protection against dust and welding debris
- Toggle-joint mechanism
- High wear resistance steel pin
- Electronic sensor
- Hook position: 0/180°
- Available version with plate machined from solid (no shimming)

CHARACTERISTICS

Operating temperature	**5° ÷ 45° C**
Min./Max. Operating pressure	**0,4 / 0,6 MPa**
Bore Ø	**50 mm**
Clamping force	**3500 N**
Weight (without plate, pin and hook)	**3,1 kg**
Pneumatic supply ports	**G1/4 on both sides**
Supply voltage	**10 ÷ 30 Vdc**
IP code	**IP 65**

IRREVERSIBLE

LIGHTWEIGHT

COMPENSATION

METAL SCRAPER

OPTICAL SENSOR

HIGH REPEATABILITY

0/180°

CODIFICATION KEY

US	SL	50	J	B	3	1	-	N	0	
1	2	3	4	5	6	7	8	9	10	11

1 SERIES
US = UNICLAMP Pin clamp with compensation

2 VERSION
SL = Pneumatic for laser beam applications, orientable hook

3 SIZE
50 = Ø50 mm

4 MODEL
J = Standard
R = With mechanical locking/unlocking device

5 HOOK POSITION
B = Standard
C = Rotated by 180°

6 PIN DIAMETER
1< = Ø18 mm
2 = Ø20 mm
3 = Ø25 mm
4 = Ø30 mm
5 = Ø35 mm
6 = Ø40 mm
For pin Ø outside the mentioned range, please contact our sales department

7 LOCATING PIN
0 = Locating pin not included
1 = Locating pin included

8 PROGRESSIVE NUMBERING
Progressive numbers for special products are assigned by the Sales Department

9 SENSOR
N = No sensor (with protection plate)

10 PRODUCT REVISION
Assigned by UNIVER

10 ATEX
X = ATEX option
See ATEX Catalogue for types and versions

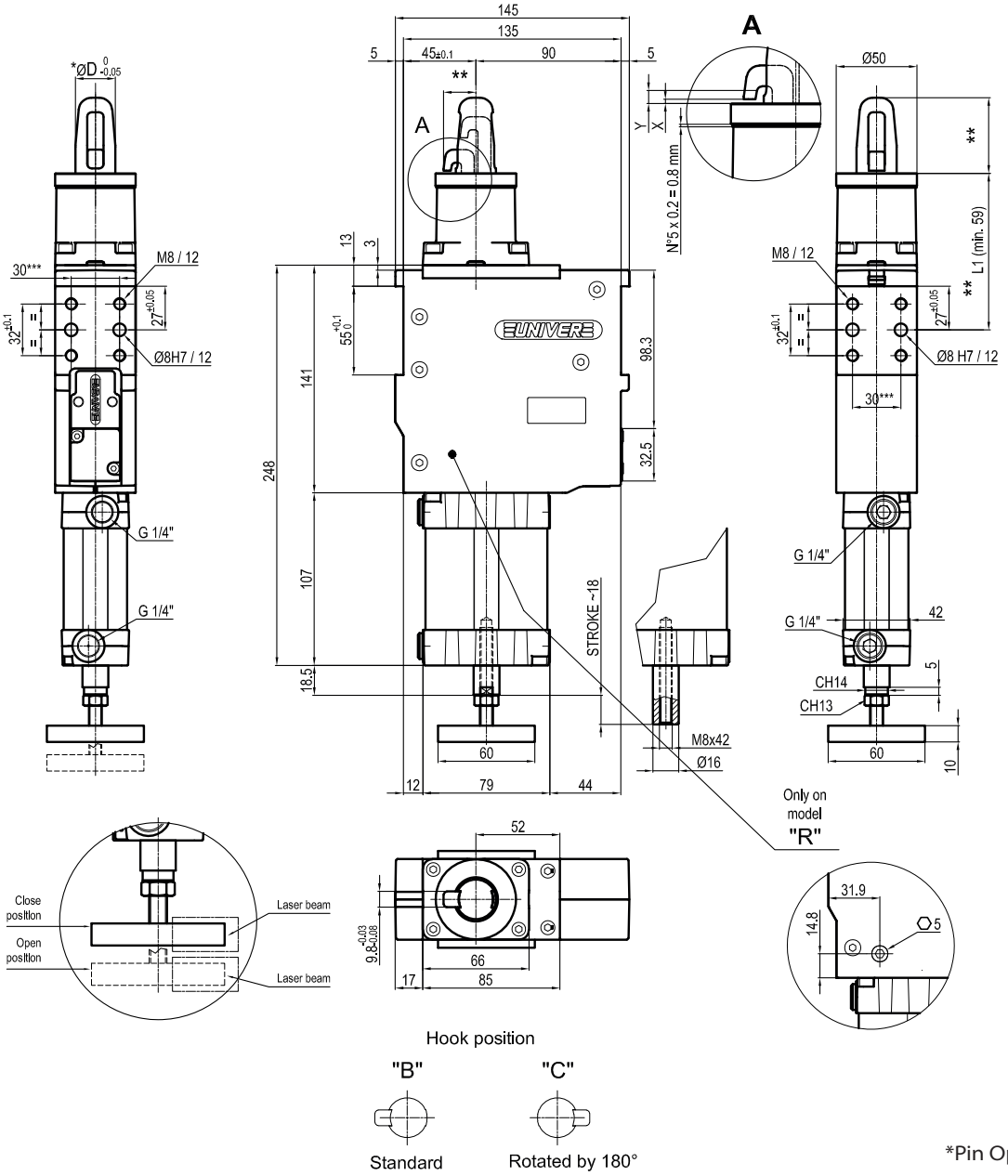

*Pin Option	ØD
1	18
2	20
3	25
4	30
5	35
6	40

X = *Metal sheet*
Y = *Clamping range (X + 2,3 mm Max.)*
VERSION WITHOUT PIN AND HOOK AVAILABLE UPON REQUEST
*** MISSING DIMENSION TO BE DEFINED ACCORDING TO CUSTOMER SPECIFICATIONS*
**** TOLERANCE BETWEEN DOWEL HOLES ± 0,02, BETWEEN SCREW HOLES ± 0,1*

Version with plate machined from solid (no shimming)

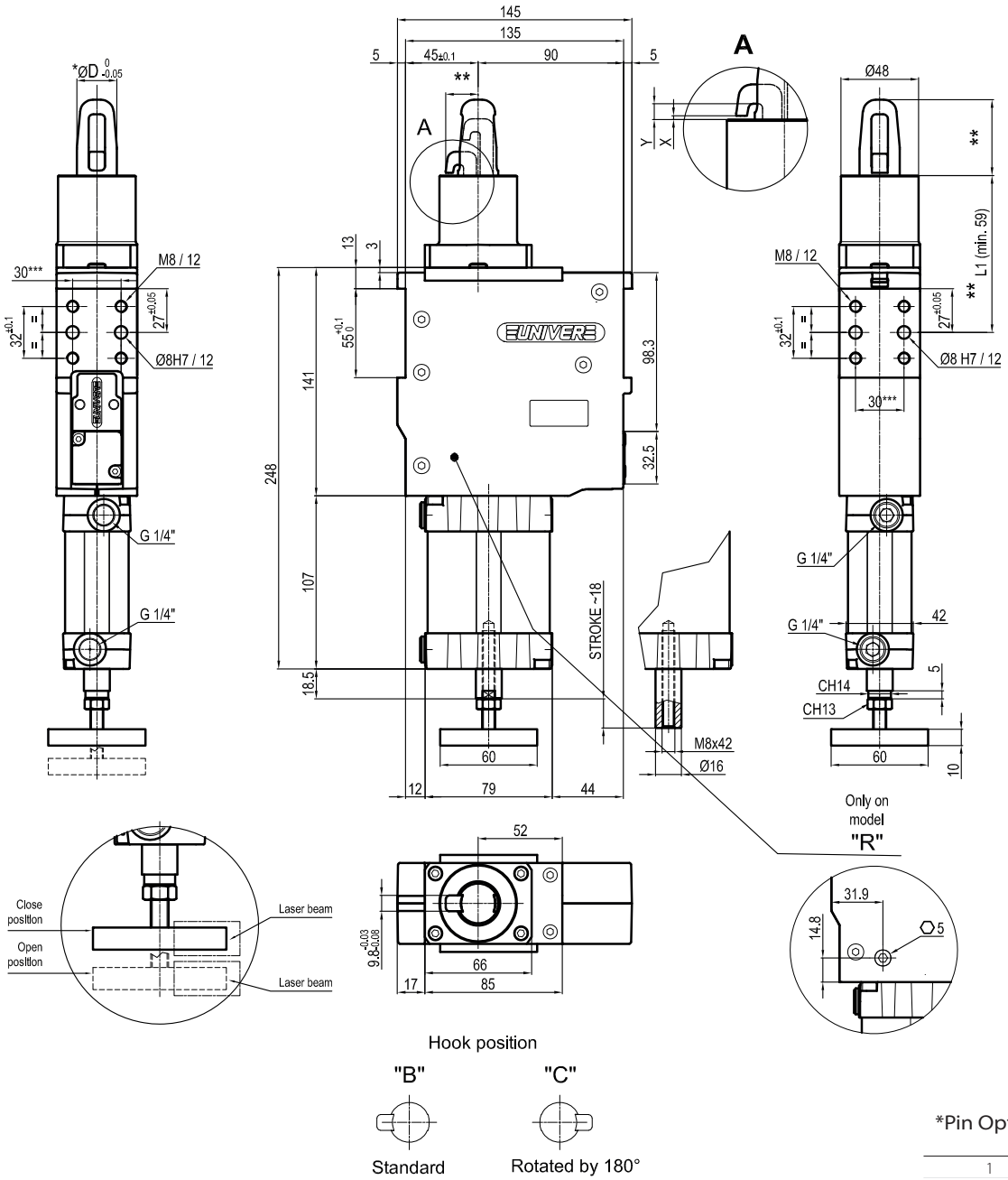

*Pin Option	ØD
1	18
2	20
3	25
4	30
5	35
6	40

X = *Metal sheet*
Y = *Clamping range (X + 2,3 mm Max.)*
VERSION WITHOUT PIN AND HOOK AVAILABLE UPON REQUEST
*** MISSING DIMENSION TO BE DEFINED ACCORDING TO CUSTOMER SPECIFICATIONS*
**** TOLERANCE BETWEEN DOWEL HOLES ± 0,02, BETWEEN SCREW HOLES ± 0,1*

USC 40

Compact retractable pin clamp with clamping fingers, Ø40 mm

Compact Pin Clamp with retractable clamping fingers for centering and clamping. The compact and lightweight constuction make this unit suitable for mounting on grippers for handling pieces through a centering hole.

- Compact dimensions
- Integrated compensation up to 3 mm
- High wear resistance steel pin
- Protection against welding debris and dust
- Toggle-joint system
- Electronic sensor

CHARACTERISTICS

Operating temperature	**5° ÷ 45° C**
Min./Max. Operating pressure	**0,4 / 0,6 MPa**
Bore Ø	**40 mm**
Clamping force	**900 N**
Weight (without plate and pin)	**1,3 kg**
Pneumatic supply ports	**G1/8 on both sides**
Sensor	**electronic (optical)**
Supply voltage	**10 ÷ 30 Vdc**
IP code	**IP 65**

IRREVERSIBLE

LIGHTWEIGHT

COMPENSATION

COMPACT

OPTICAL SENSOR

HIGH REPEATABILITY

METAL SCRAPER

CODIFICATION KEY

US	C	40	J	3	1	-	K	0	
1	2	3	4	5	6	7	8	9	10

1 SERIES
US = UNICLAMP Pin clamp with compensation

2 VERSION
C = Pneumatic compact with clamping fingers

3 SIZE
40 = Ø40 mm

4 MODEL
J = Standard
R = With mechanical locking/unlocking device

5 PIN DIAMETER
1< = Ø15,8 mm
2 = Ø20 mm
3 = Ø25 mm
4 = Ø30 mm

For pin Ø outside the mentioned range, please contact our sales department

6 LOCATING PIN
1 = Locating pin included

7 PROGRESSIVE NUMBERING
Progressive numbers for special products are assigned by the Sales Department

8 SENSOR
N = No sensor (with protection plate)
K = Electronic sensor PNP, M12 (DF-K)
J = Electronic sensor NPN, optical (DF-J)
Y = Electronic sensor PNP, M12 (DF-Y) white LED

9 PRODUCT REVISION
Assigned by UNIVER

10 ATEX
X = ATEX option
See ATEX Catalogue for types and versions

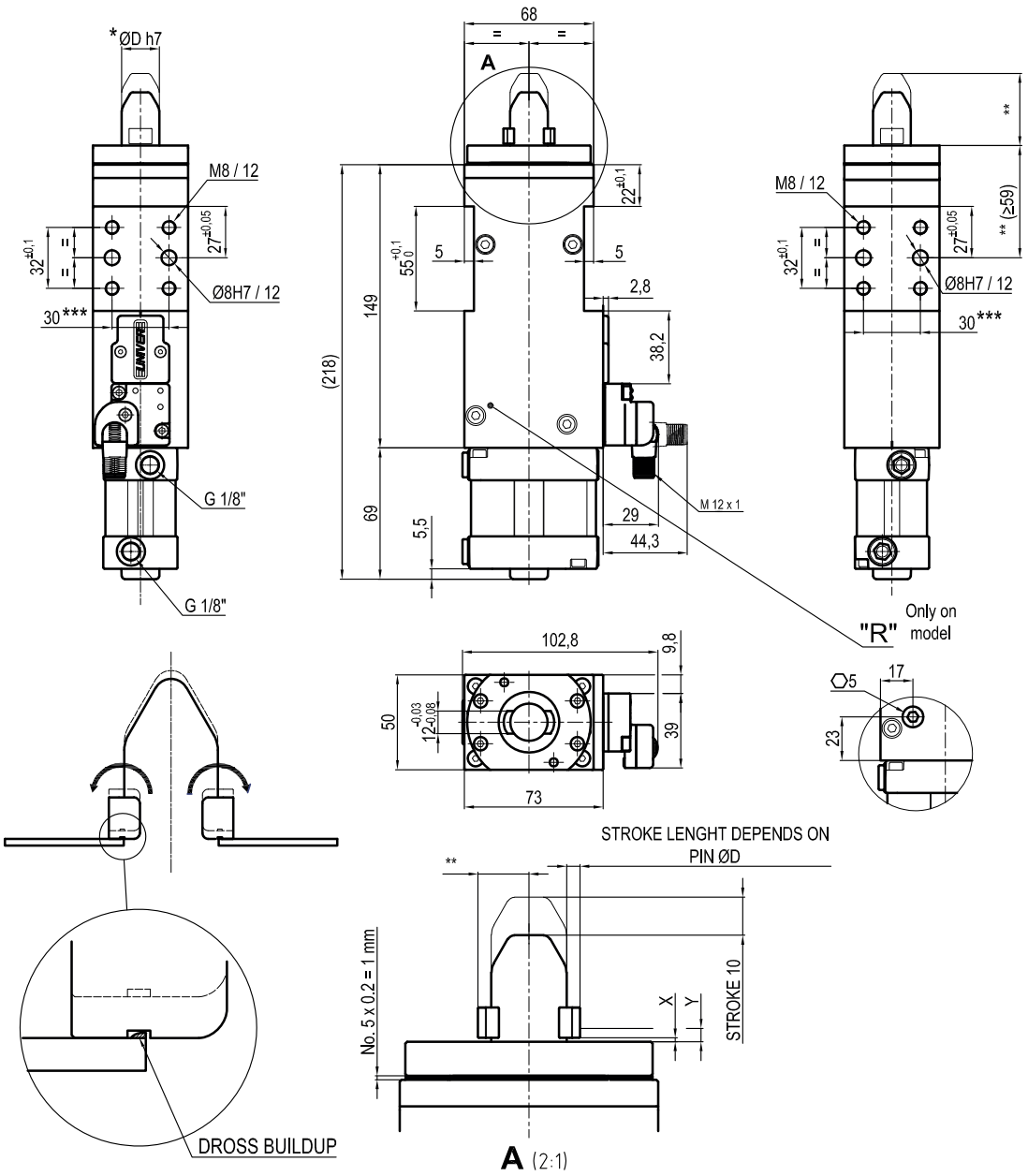

*Pin Option	ØD
1	15,8
2	20
3	25
4	30

X = *Metal sheet*
Y = *Clamping range (X + 3 mm Max.)*
VERSION WITHOUT PIN AND HOOK AVAILABLE UPON REQUEST
*** MISSING DIMENSION TO BE DEFINED ACCORDING TO CUSTOMER SPECIFICATIONS*
**** TOLERANCE BETWEEN DOWEL HOLES ± 0,02, BETWEEN SCREW HOLES ± 0,1*

Sensors

Electronic (optical)

DF-K PNP M12
DF-J NPN M12
DF-Y PNP M12 White LED

USR 40

Compact pin clamp with single or double hook, Ø40 mm

Compact pin clamp with single or double hook for centering and clamping. The compact and lightweight construction make this unit suitable for mounting on grippers and in applications where reduced dimensions are required

- Compact dimensions
- Integrated compensation up to 3 mm
- High wear resistance steel pin
- Protection agaisnt welding debris and dust
- Toggle-joint system
- Version with single or double hook
- Electronic sensor

CHARACTERISTICS

Operating temperature	**5° ÷ 45° C**
Min./Max. Operating pressure	**0,4 / 0,6 MPa**
Bore Ø	**40 mm**
Clamping force	**900 N**
Weight (without plate, pin and hook)	**1,9 kg**
Pneumatic supply ports	**G1/8 on both sides**
Sensor	**electronic (optical)**
Supply voltage	**10 ÷ 30 Vdc**
IP code	**IP 65**

6

IRREVERSIBLE

LIGHTWEIGHT

COMPENSATION

COMPACT

OPTICAL SENSOR

HIGH REPEATABILITY

METAL SCRAPER

CODIFICATION KEY

US	R	40	J	3	1	S	-	K	0	
1	2	3	4	5	6	7	8	9	10	11

1 SERIES
US = UNICLAMP Pin clamp

2 VERSION
R = Pneumatic compact

3 SIZE
40 = Ø40 mm

4 MODEL
J = Standard
R = With mechanical locking/unlocking device
F = Without compensation

5 PIN DIAMETER
1< = Ø19 mm
2 = Ø20 mm
3 = Ø25 mm
4 = Ø30 mm
5 = Ø35 mm
6 = Ø40 mm
For pin Ø outside the mentioned range, please contact our sales department

6 LOCATING PIN
0 = Locating pin not included
1 = Locating pin included

7 HOOK
S = Single hook
D = Double hook, standard without compensation* (model F)
*For version with compensation please contact our sales department

8 PROGRESSIVE NUMBERING
Progressive numbers for special products are assigned by the Sales Department

9 SENSOR
N = No sensor (with protection plate)
K = Electronic sensor PNP, M12 (DF-K)
J = Electronic sensor NPN, optical (DF-J)
Y = Electronic sensor PNP, M12 (DF-Y) white LED

10 PRODUCT REVISION
Assigned by UNIVER

11 ATEX
X = ATEX option
See ATEX Catalogue for types and versions

S | Single hook

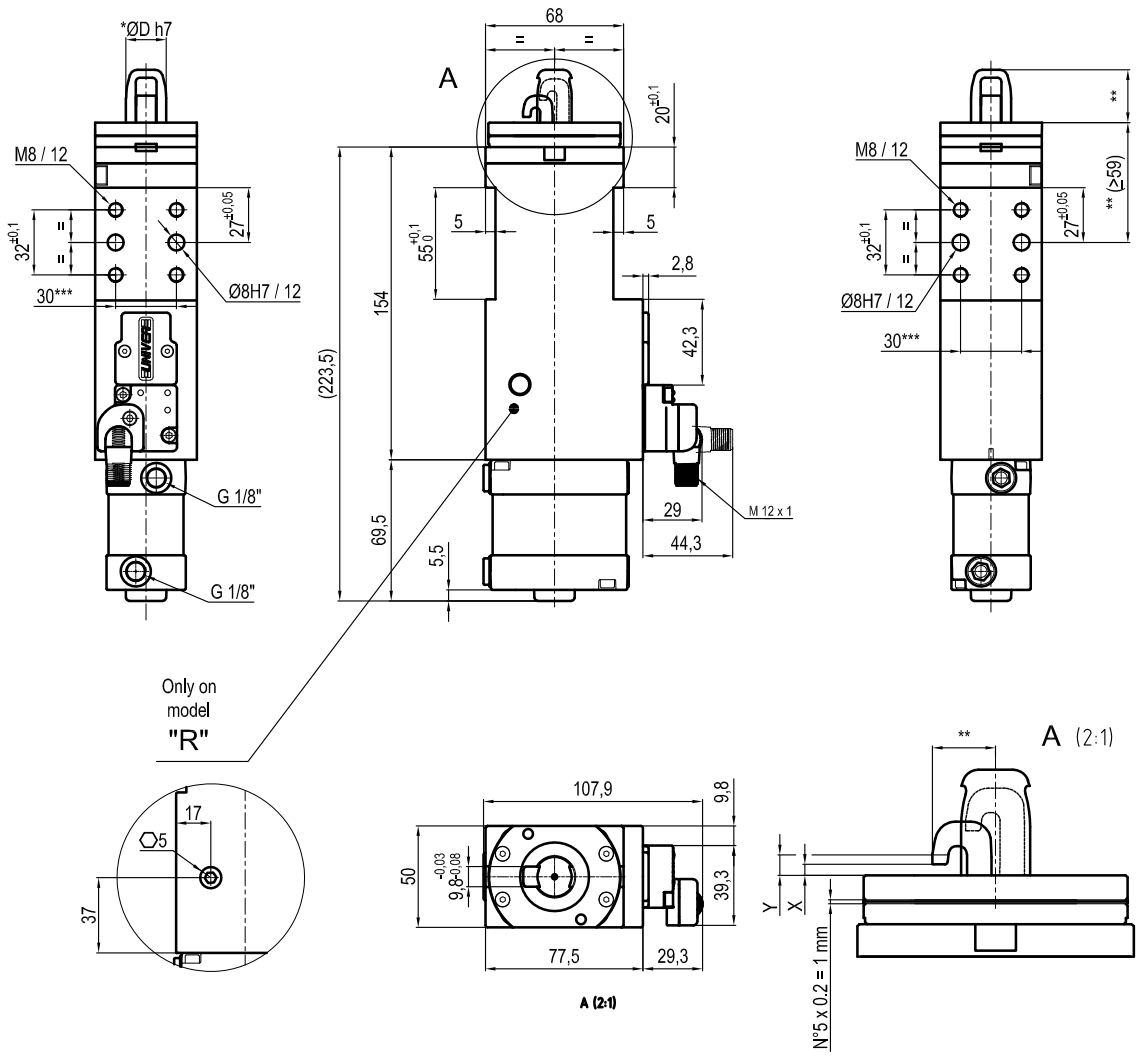

*Pin Option	ØD
1	15,8
2	20
3	25
4	30

X = *Metal sheet*
Y = *Clamping range (X + 3 mm Max.)*
VERSION WITHOUT PIN AND HOOK AVAILABLE UPON REQUEST
*** MISSING DIMENSION TO BE DEFINED ACCORDING TO CUSTOMER SPECIFICATIONS*
**** TOLERANCE BETWEEN DOWEL HOLES ± 0,02, BETWEEN SCREW HOLES ± 0,1*

Sensors

Electronic (optical)

DF-K PNP M12
DF-J NPN M12
DF-Y PNP M12 White LED

D | Double hook

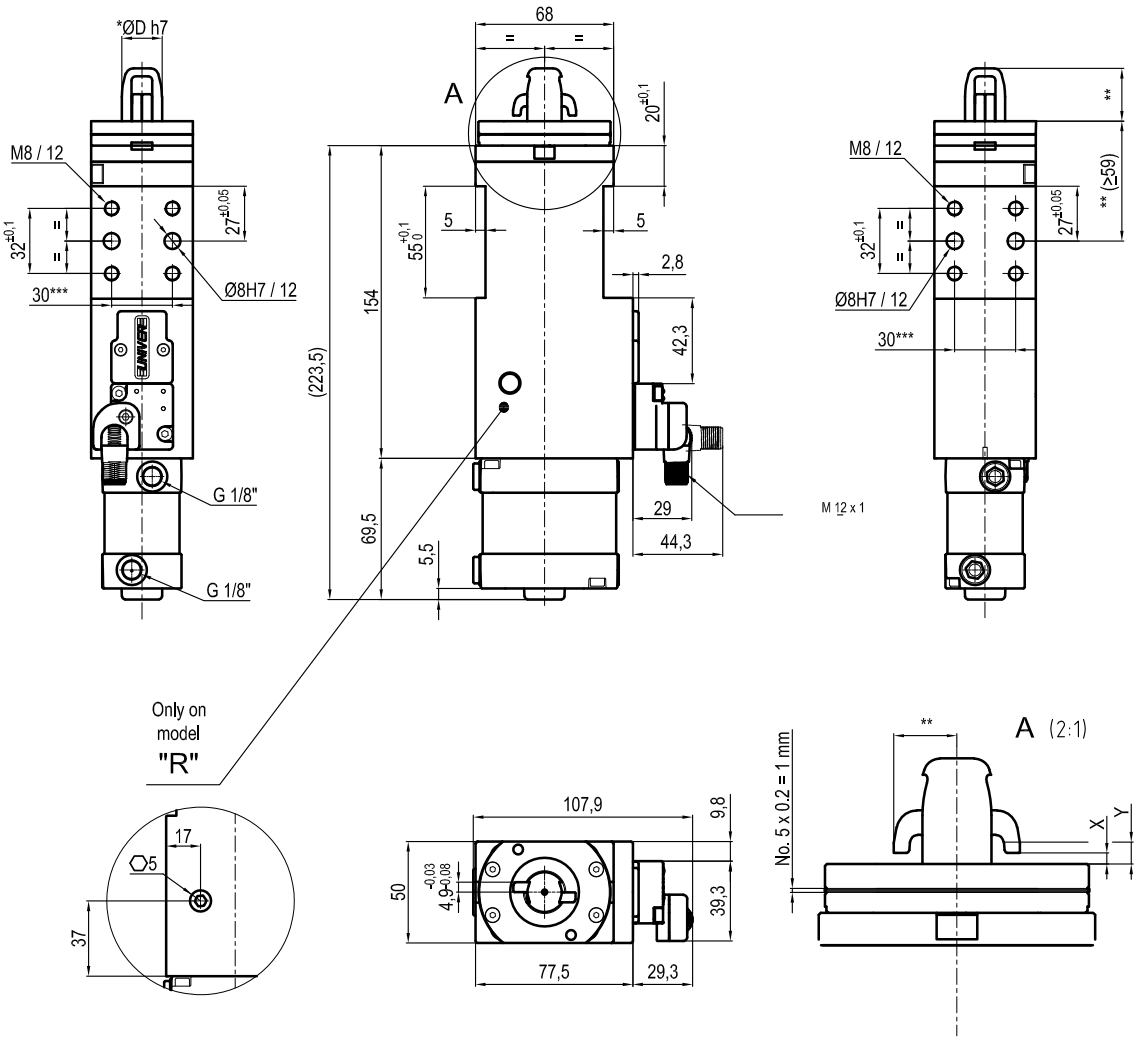

*Pin Option	ØD
1	15,8
2	20
3	25
4	30

X = *Metal sheet*
Y = *Clamping range (X + 3 mm Max.)*
VERSION WITHOUT PIN AND HOOK AVAILABLE UPON REQUEST
*** MISSING DIMENSION TO BE DEFINED ACCORDING TO CUSTOMER SPECIFICATIONS*
**** TOLERANCE BETWEEN DOWEL HOLES ± 0,02, BETWEEN SCREW HOLES ± 0,1*

Sensors

Electronic (optical)

DF-K PNP M12
DF-J NPN M12
DF-Y PNP M12 White LED

UST 50

Pneumatic pin clamp with vanishing hook, Ø50 mm

Pneumatic pin clamp with vanishing hook, mainly designed for centering and clamping metal sheets in BIW underbody applications

- Integrated compensation up to 1,5 mm
- Irreversible
- Protection against welding debris and dust
- High repeatability
- Electronic sensor

CHARACTERISTICS

Operating temperature	**5° ÷ 45° C**
Min./Max. Operating pressure	**0,4 / 0,6 MPa**
Bore Ø	**50 mm**
Clamping force	**3500 N**
Weight (without plate, pin and hook)	**3,0 kg**
Pneumatic supply ports	**G1/4 on both sides**
Sensor	**electronic (optical)**
Supply voltage	**10 ÷ 30 Vdc**
IP code	**IP 65**

6

IRREVERSIBLE

LIGHTWEIGHT

COMPENSATION

OPTICAL SENSOR

HIGH REPEATABILITY

CODIFICATION KEY

US	T	50	T	2	0	-	K	0	
1	2	3	4	5	6	7	8	9	10

1 SERIES
US = UNICLAMP Pin clamp with compensation

2 VERSION
T = Pneumatic

3 SIZE
50 = Ø50 mm

4 MODEL
T = With vanishing hook

5 PIN DIAMETER
1< = Ø19 mm
2 = Ø20 mm
3 = Ø25 mm
4 = Ø30 mm
5 = Ø35 mm
6 = Ø40 mm
For pin Ø outside the mentioned range, please contact our sales department

6 LOCATING PIN
0 = Locating pin not included
1 = Locating pin included

7 PROGRESSIVE NUMBERING
Progressive numbers for special products are assigned by the Sales Department

8 SENSOR
N = No sensor (with protection plate)
K = Electronic sensor PNP, M12 (DF-K)
J = Electronic sensor NPN, optical (DF-J)
Y = Electronic sensor PNP, M12 (DF-Y) white LED

9 PRODUCT REVISION
Assigned by UNIVER

11 ATEX
X = ATEX option
See ATEX Catalogue for types and versions

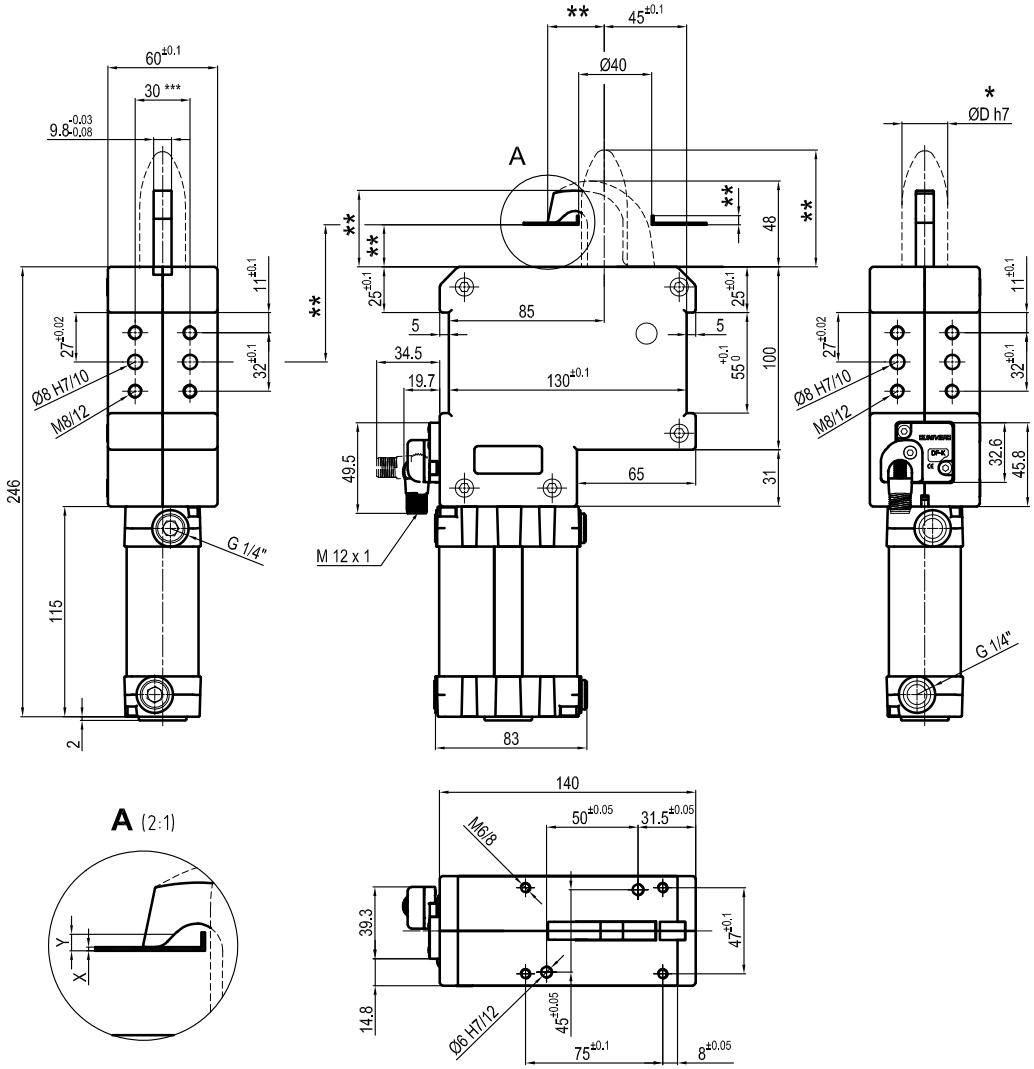

*Pin Option	ØD
1	<=19
2	20
3	25
4	30
5	35
6	40

X = *Metal sheet*
Y = *Clamping range (X + 1,5 mm Max.)*
VERSION WITHOUT PIN AND HOOK AVAILABLE UPON REQUEST
*** MISSING DIMENSIONS TO BE DEFINED ACCORDING TO CUSTOMER SPECIFICATIONS*
**** TOLERANCE BETWEEN DOWEL HOLES ± 0,02, BETWEEN SCREW HOLES ± 0,1*

Sensors

Electronic (optical)

DF-K PNP M12
DF-J NPN M12
DF-Y PNP M12 White LED

USP 50U

Pneumatic pin clamp - Horizontal shape, Ø50 mm

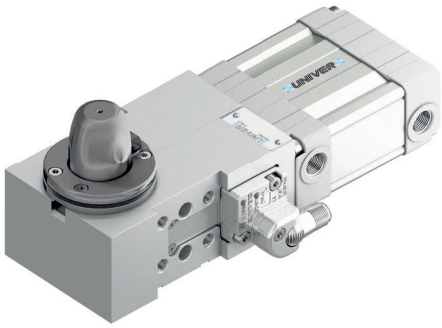

Pneumatic pin clamp with horizontal shape, mainly designed for centering and clamping metal sheets in BIW underbody applications. Thanks to the flat shape it is widely used in applications where the installation space is very small

- Integrated compensation up to 0,5 mm
- Protection against welding debris and dust
- Toggle-joint mechanism
- High repeatability
- Two sided sensor mounting
- Electronic sensor

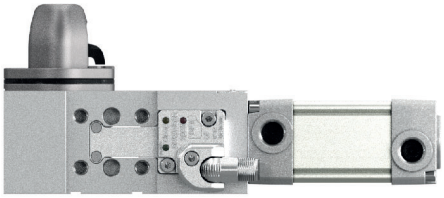

CHARACTERISTICS

Operating temperature	**5° ÷ 45° C**
Min./Max. Operating pressure	**0,4 / 0,6 MPa**
Bore Ø	**50 mm**
Clamping force	**2500 N**
Weight (without plate, pin and hook)	**2,2 kg**
Pneumatic supply ports	**G1/8 on both sides**
Sensor	**electronic (optical)**
Supply voltage	**10 ÷ 30 Vdc**
IP code	**IP 65**

IRREVERSIBLE

LIGHTWEIGHT

METAL SCRAPER

OPTICAL SENSOR

HIGH REPEATABILITY

CODIFICATION KEY

US	P	50	U	3	1	L	-	K		
1	2	3	4	5	6	7	8	9	10	11

1 SERIES
US = UNICLAMP Pin clamp with compensation

2 VERSION
P = Pneumatic

3 SIZE
50 = Ø50 mm

4 MODEL
U = Horizontal shape

5 PIN DIAMETER
1< = Ø19 mm
2 = Ø20 mm
3 = Ø25 mm
4 = Ø30 mm
5 = Ø35 mm
For pin Ø outside the mentioned range, please contact our sales department

6 LOCATING PIN
0 = Locating pin not included
1 = Locating pin included

7 SENSOR POSITION
L = Left side
R = Right side

8 PROGRESSIVE NUMBERING
Progressive numbers for special products are assigned by the Sales Department

9 SENSOR
N = No sensor (with protection plate)
K = Electronic sensor PNP, M12 (DF-K)
J = Electronic sensor NPN, optical (DF-J)
Y = Electronic sensor PNP, M12 (DF-Y) white LED

10 PRODUCT REVISION
Assigned by UNIVER

11 ATEX
X = ATEX option
See ATEX Catalogue for types and versions

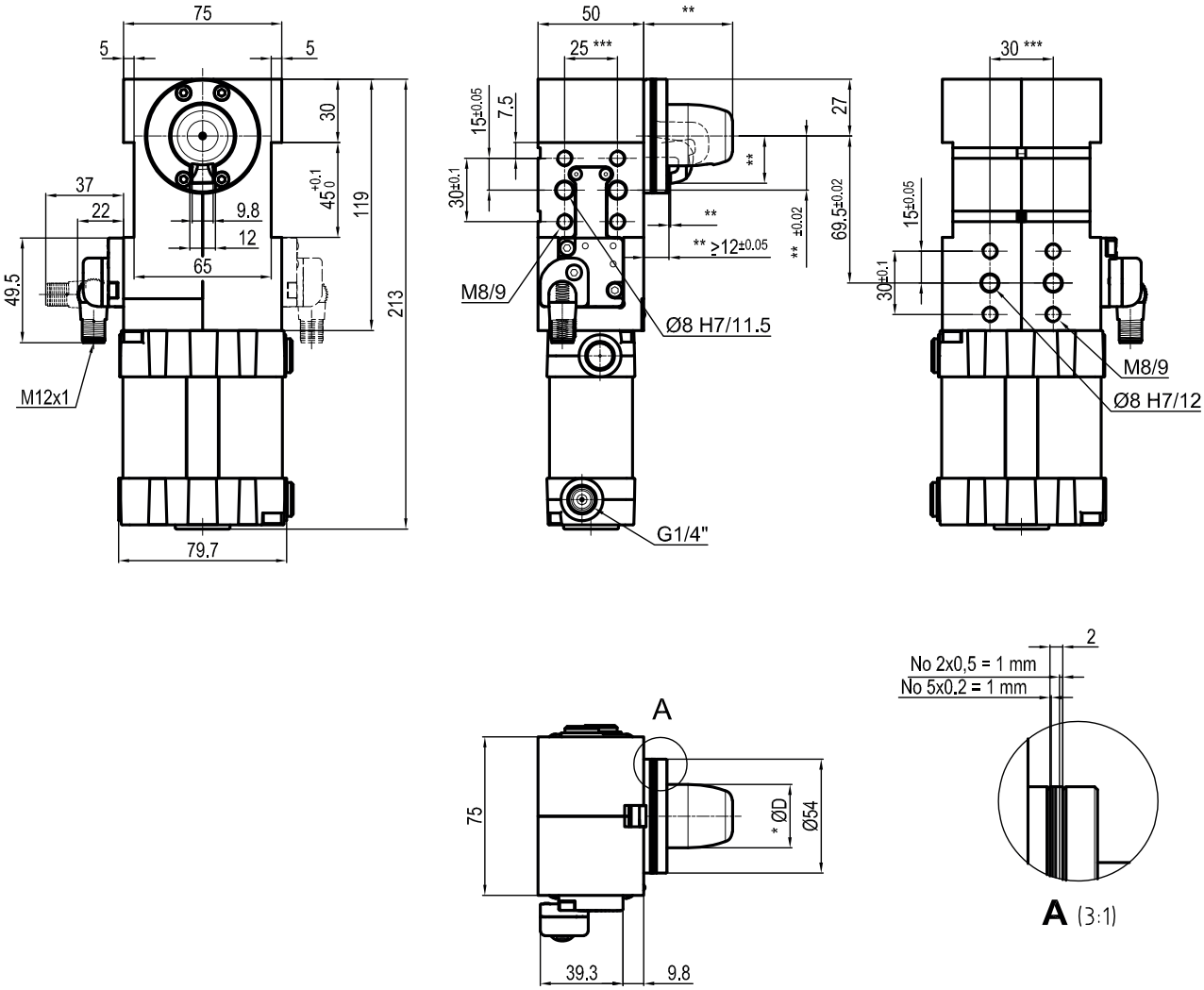

*Pin Option	ØD
1	<=19
2	20
3	25
4	30
5	35
6	40

*** MISSING DIMENSION TO BE DEFINED ACCORDING TO CUSTOMER SPECIFICATIONS*
**** TOLERANCE BETWEEN DOWEL HOLES ± 0,02, BETWEEN SCREW HOLES ± 0,1*
THE SENSOR CAN BE MOUNTED ON EITHER RIGHT OR LEFT SIDE

Sensors

Electronic (optical)

DF-K PNP M12
DF-J NPN M12
DF-Y PNP M12 White LED

LUP 63

Pneumatic pin clamp with vanishing hook and pin, Ø63 mm

Pneumatic pin clamp with vanishing hook and pin, mainly designed for centering and clamping metal sheets in BIW underbody applications with no need to raisea and lower the metal sheet during positioning operations

- Protection against welding debris and dust
- Irreversible
- High repeatability
- High wear resistance steel pin
- Electronic sensor with 2 cables and M12 connectors to detect the position of both the pin and hook

CHARACTERISTICS

Operating temperature	**5° ÷ 45° C**
Min./Max. Operating pressure	**0,4 / 0,6 MPa**
Bore Ø	**63 mm**
Clamping force	**1500 N**
Weight (without plate, pin and hook)	**3,0 kg**
Pneumatic supply ports	**G1/8**
Sensor	**electronic with 2xM12 cables**
Supply voltage	**10 ÷ 30 Vdc**
IP code	**IP 65**

IRREVERSIBLE

LIGHTWEIGHT

HIGH REPEATABILITY

METAL SCRAPER

CODIFICATION KEY

LU	P	63	S	**E**	**3**	1	-
1	2	3	4	5	6	7	8

1 SERIES
LU = Pin clamp

2 VERSION
P = Pneumatic

3 SIZE
63 = Ø63 mm

4 MODEL
S = Vanishing hook and pin

5 SENSOR
N = No sensor (with protection plate)
E = DF-LUP sensor

6 PIN DIAMETER
1< = Ø19 mm
2 = Ø20 mm
3 = Ø25 mm
4 = Ø30 mm
5 = Ø35 mm
6 = Ø40 mm

7 LOCATING PIN
1 = Locating pin included

8 PROGRESSIVE NUMBERING
Progressive numbers for special products are assigned by the Sales Department

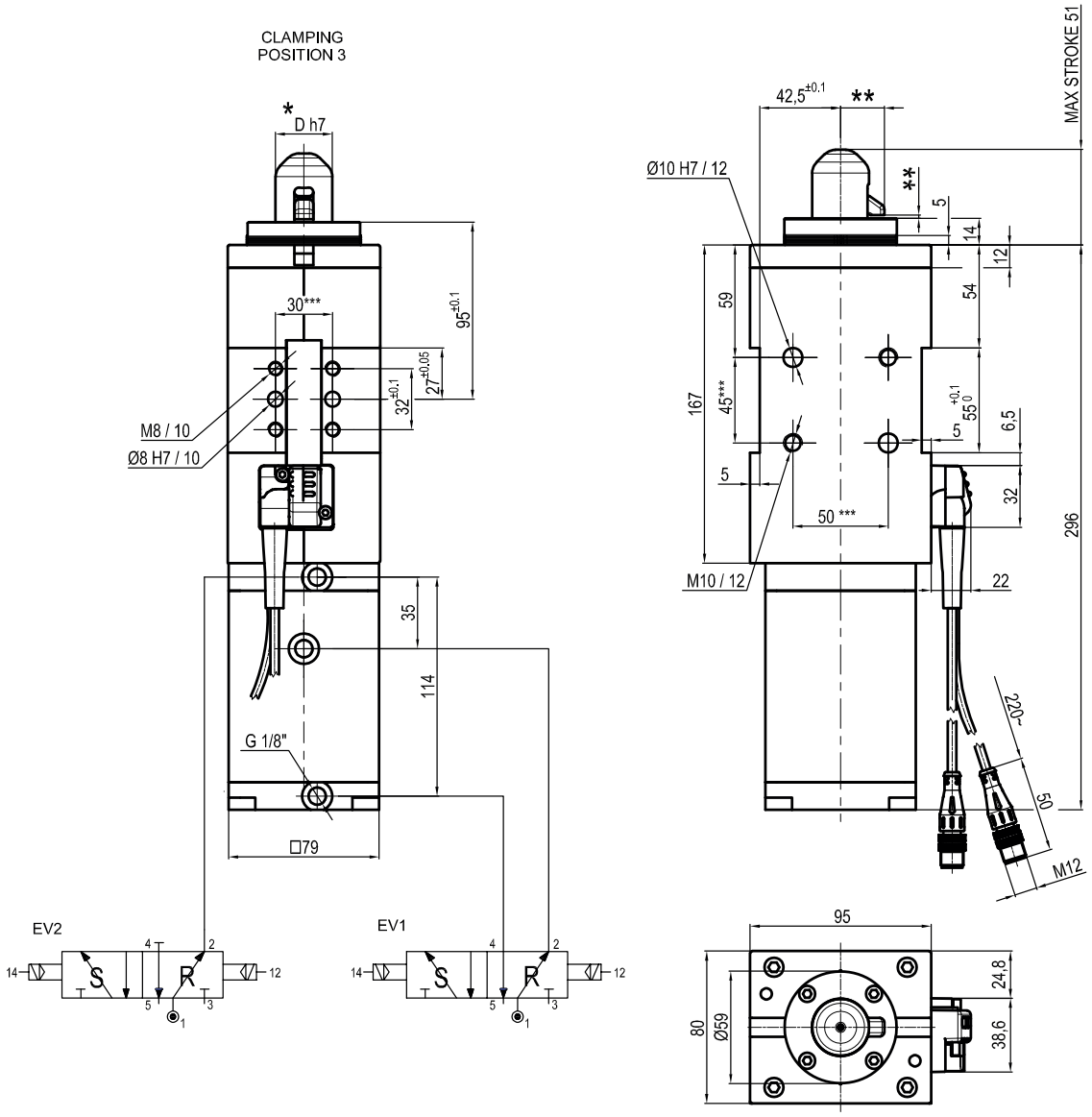

*** MISSING DIMENSION TO BE DEFINED ACCORDING TO CUSTOMER SPECIFICATIONS*
**** TOLERANCE BETWEEN DOWEL HOLES ± 0,02, BETWEEN SCREW HOLES ± 0,1*

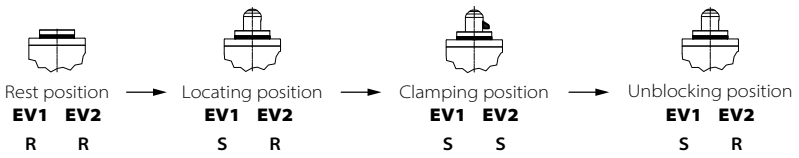

*Pin Option	ØD
1	<=19
2	20
3	25
4	30
5	35
6	40

Sensors

Electronic

DF-LUP

USL 50

Manual pin clamp, Ø50 mm

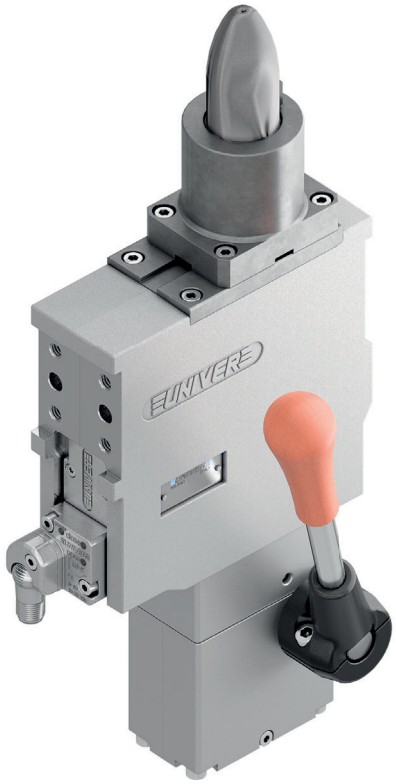

Manual pin clamp mainly designed for centering and clamping metal sheets in BIW underbody applications

- Integrated compensation up to 2,3 mm
- Double metal scraper for protection against dust and welding debris
- Toggle-joint mechanism
- High wear resistance steel pin
- Electronic sensor
- Hook position: 0/180°
- Ergonomic hand lever
- Available version with plate machined from solid (no shimming)

CHARACTERISTICS

Operating temperature	**5° ÷ 45° C**
Min./Max. Operating pressure	**0,4 / 0,6 MPa**
Bore Ø	**50 mm**
Clamping force	**3500 N**
Weight (without plate, pin and hook)	**3,6 kg**
Sensor	**electronic (optical)**
Supply voltage	**10 ÷ 30 Vdc**
IP code	**IP 65**

IRREVERSIBLE

LIGHTWEIGHT

COMPENSATION

METAL SCRAPER

OPTICAL SENSOR

HIGH REPEATABILITY

CODIFICATION KEY

US	L	50	J	**3**	**1**	-	**K**	0	
1	2	3	4	5	6	7	8	9	10

1 SERIES
US = UNICLAMP Pin clamp with compensation

2 VERSION
L = Manual with hand lever

3 SIZE
50 = Ø50 mm

4 MODEL
J = Standard

5 PIN DIAMETER
1< = Ø18 mm
2 = Ø20 mm
3 = Ø25 mm
4 = Ø30 mm
5 = Ø35 mm
6 = Ø40 mm
For pin Ø outside the mentioned range, please contact our sales department

6 LOCATING PIN
0 = Locating pin not included
1 = Locating pin included

7 PROGRESSIVE NUMBERING
Progressive numbers for special products are assigned by the Sales Department

8 SENSOR
N = No sensor (with protection plate)
K = Electronic sensor PNP, M12 (DF-K)
J = Electronic sensor NPN, optical (DF-J)
Y = Electronic sensor PNP, M12 (DF-Y) white LED

9 PRODUCT REVISION
Assigned by UNIVER

10 ATEX
X = ATEX option
See ATEX Catalogue for types and versions

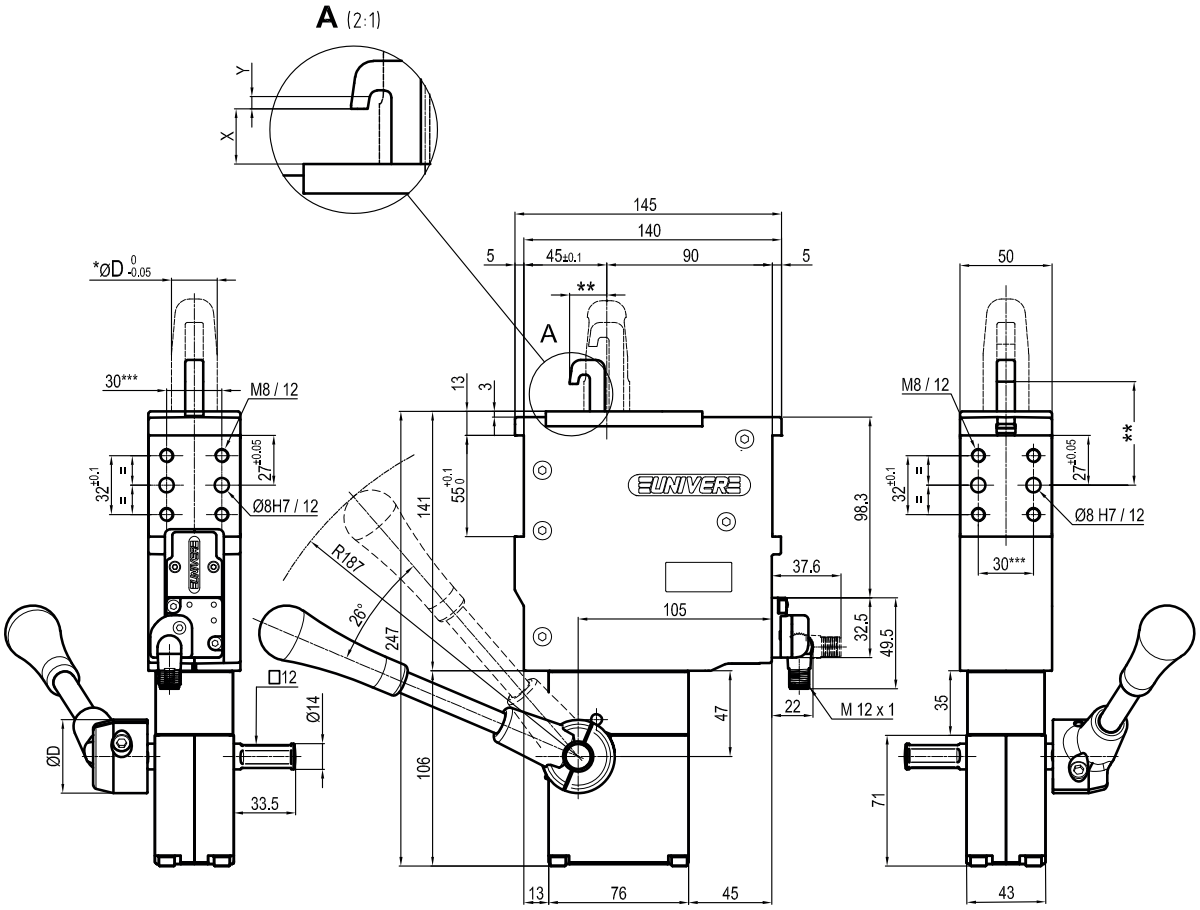

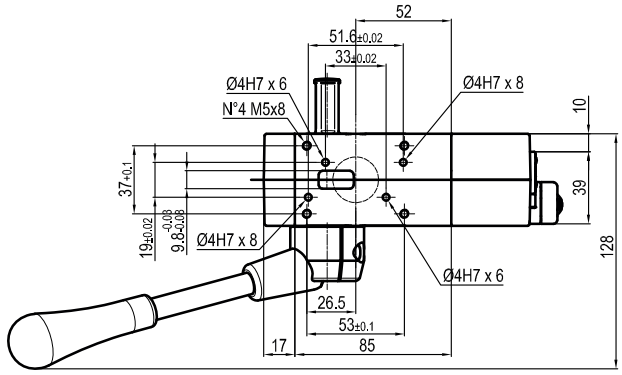

*Pin Option	ØD
1	18
2	20
3	25
4	30
5	35
6	40

X = *Metal sheet*
Y = *Clamping range (X + 2,3 mm Max.)*
VERSION WITHOUT PIN AND HOOK AVAILABLE UPON REQUEST
*** MISSING DIMENSION TO BE DEFINED ACCORDING TO CUSTOMER SPECIFICATIONS*
**** TOLERANCE BETWEEN DOWEL HOLES ± 0,02, BETWEEN SCREW HOLES ± 0,1*

Sensors

Electronic (optical)

DF-K PNP M12
DF-J NPN M12
DF-Y PNP M12 White LED

Accessories

Handlever

UBF255063

7

UNICLAMP

PNEUMATIC MARKING UNITS

Single character 250-500Nm

UPD02 2
UPD05 5

Marking head 5000-12000Nm

UPR05 8
UPR11 13

UPD 02

Marking unit with single character, 250 Nm

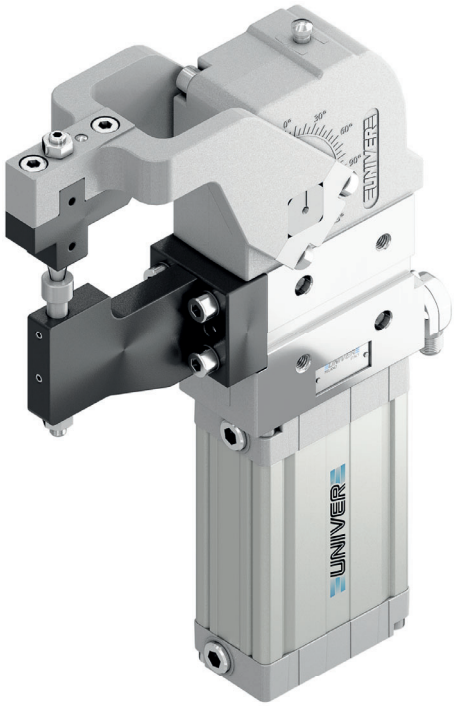

Marking unit with 250 Nm clamping moment specially designed for marking one single character on metal sheets. High customisation rate thanks to adjustable opening angle and the possibility to choose the marking position and character.

- Different marking characters available
- Possibility to choose the marking position (from above or from below)
- 120° adjustable opening angle
- Optical sensor
- Version with 500 Nm clamping moment available
- Integrated compensation up to 2 mm
- Possibility to translate the position of the metal sheet vertically

CHARACTERISTICS

Operating temperature	**5° ÷ 45° C**
Min./Max. Operating pressure	**0,4 / 0,6 MPa**
Opening angle	**0 ÷120°**
Cylinder bore Ø	**63 mm**
Marking force (0,5 MPa)	**2 KN**
Clamping moment (0,55 Mpa)	**250 Nm**
Weight	**6,1 kg**
Air cycle (0,5 MPa)	**3,4 Nl**
Pneumatic supply ports	**G1/4 on both sides**
Sensor	**electronic (optical)**
Supply voltage	**10 ÷ 30 Vdc**
IP code	**IP 65**

COMPENSATION

ANGLE ADJUSTMENT

OPTICAL SENSOR

CODIFICATION KEY

UPD	02	08	OR	**M**	**00**	0	
1	2	3	4	5	6	7	8

1 SERIES
UPD = UNICLAMP Marking units single character

2 VERSION
02 = 250Nm Ø 63 mm cylinder

3 SIZE
08 = 84 mm

4 OPENING ANGLE
OR = 120° adjustable

5 CHARACTER MOUNTING
M = on the moving part
F = on the fixed part

6 CHARACTER
00 = Without character (Standard)
Progressive numbers are assigned by the Sales Dept.

7 PRODUCT REVISION
Assigned by UNIVER

8 ATEX
X = ATEX option
See ATEX Catalogue for types and versions

F Character mounting

On the fixed part

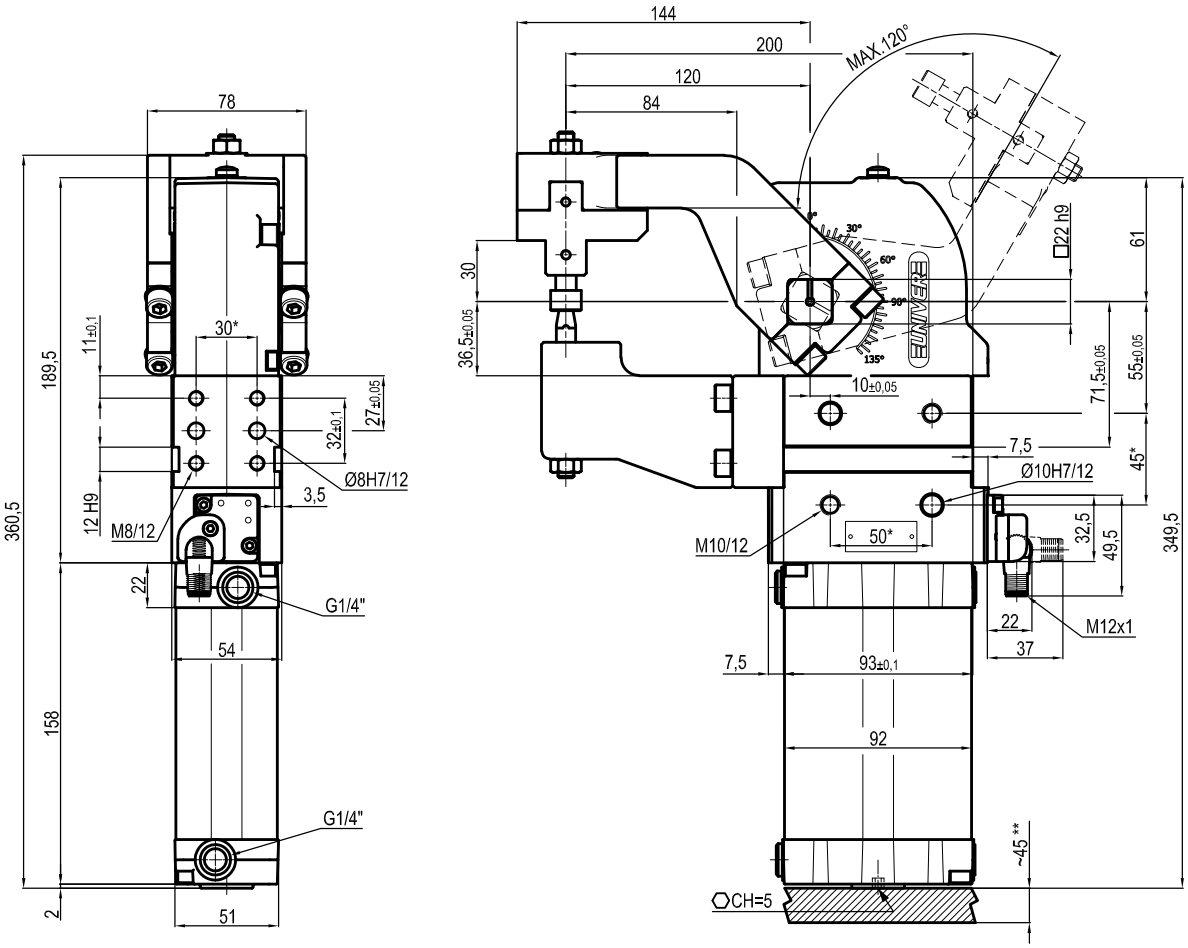

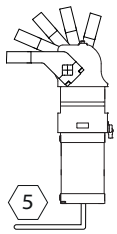

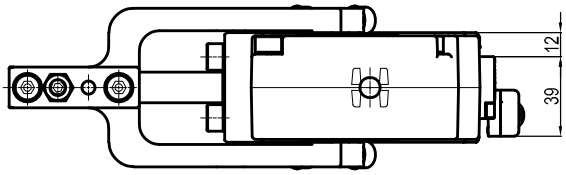

** TOLERANCE BETWEEN DOWELS ± 0,02, BETWEEN SCREW HOLES ± 0,1*
*** AREA TO ACCES ANGLE ADJUSTMENT*

Sensors

Electronic (optical)

DF-K PNP M12
DF-J NPN M12
DF-Y PNP M12 White LED

M | Character mounting

On the moving part

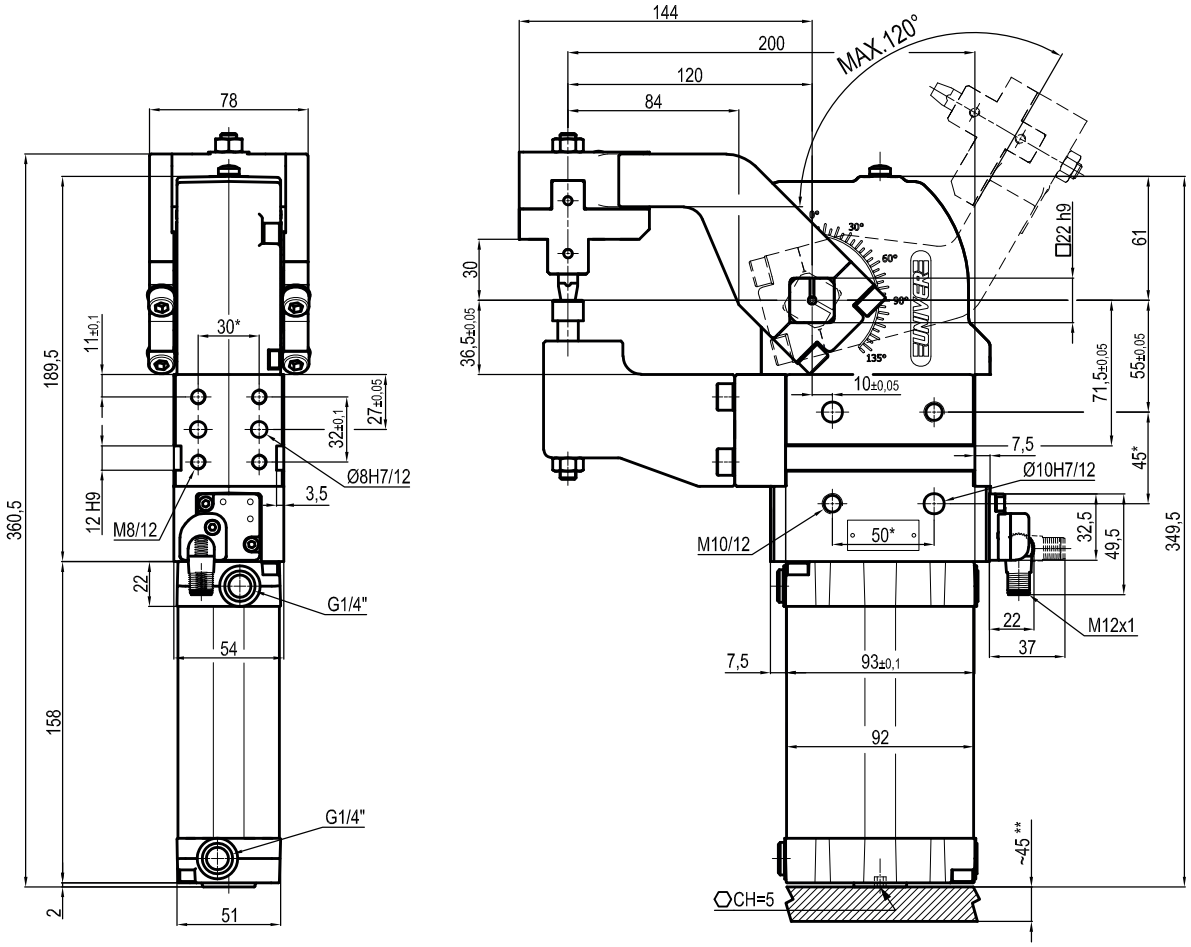

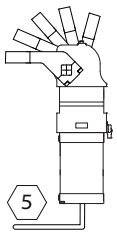

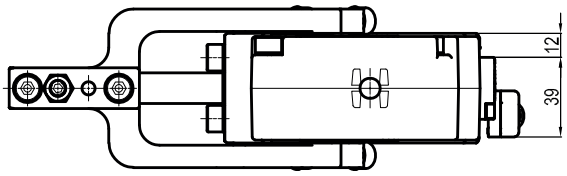

** TOLERANCE BETWEEN DOWELS ± 0,02, BETWEEN SCREW HOLES ± 0,1*
*** AREA TO ACCES ANGLE ADJUSTMENT*

Sensors

Electronic (optical)

DF-K PNP M12
DF-J NPN M12
DF-Y PNP M12 White LED

UPD 05

Marking unit with single character, 500 Nm

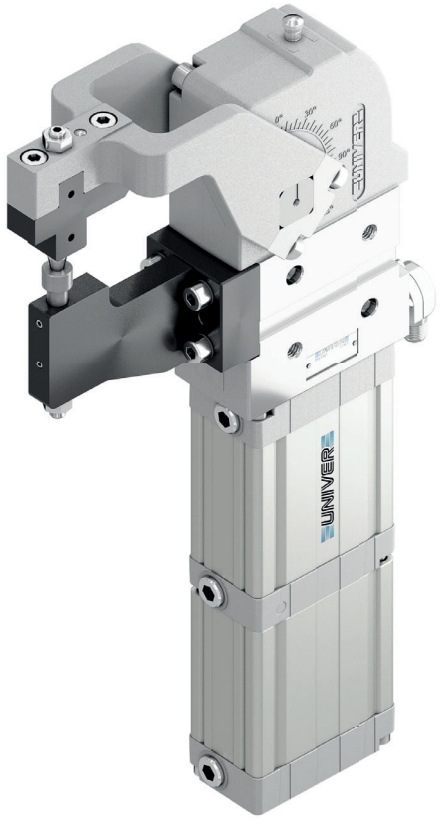

Marking unit with 500 Nm clamping moment specially designed for marking one single character on metal sheets. High customisation thanks to the possibility to choose the marking position and character.

- Different marking characters available
- Possibility to choose the marking position (from above or from below)
- Integrated compensation up to 2 mm
- 75° opening angle
- Optical sensor
- Possibility to translate the position of the metal sheet vertically

COMPENSATION

OPTICAL SENSOR

CHARACTERISTICS

Operating temperature	**5° ÷ 45° C**
Min./Max. Operating pressure	**0,4 / 0,6 MPa**
Opening angle	**0 ÷75°**
Cylinder bore Ø	**63 mm**
Marking force (0,5 MPa)	**4 KN**
Clamping moment (0,55 Mpa)	**500 Nm**
Weight	**6,6 kg**
Air cycle (0,5 MPa)	**3,7 Nl**
Pneumatic supply ports	**G1/4 on both sides**
Sensor	**electronic (optical)**
Supply voltage	**10 ÷ 30 Vdc**
IP code	**IP 65**

CODIFICATION KEY

UPD	05	08	OF	**M**	**00**	F	0	
1	2	3	4	5	6	7	8	9

1 SERIES
UPD = UNICLAMP Marking units single character

2 VERSION
05 = 500 Nm Ø 63 mm tandem cylinder

3 SIZE
08 = 84 mm

4 OPENING ANGLE
OF = 75° fixed

5 CHARACTER MOUNTING
M = on the moving part
F = on the fixed part

6 CHARACTER
00 = Without character (Standard)
Progressive numbers are assigned by the Sales Dept.

7 PRODUCT REVISION
Assigned by UNIVER

8 ATEX
X = ATEX option
See ATEX Catalogue for types and versions

9

F Character mounting

On the fixed part

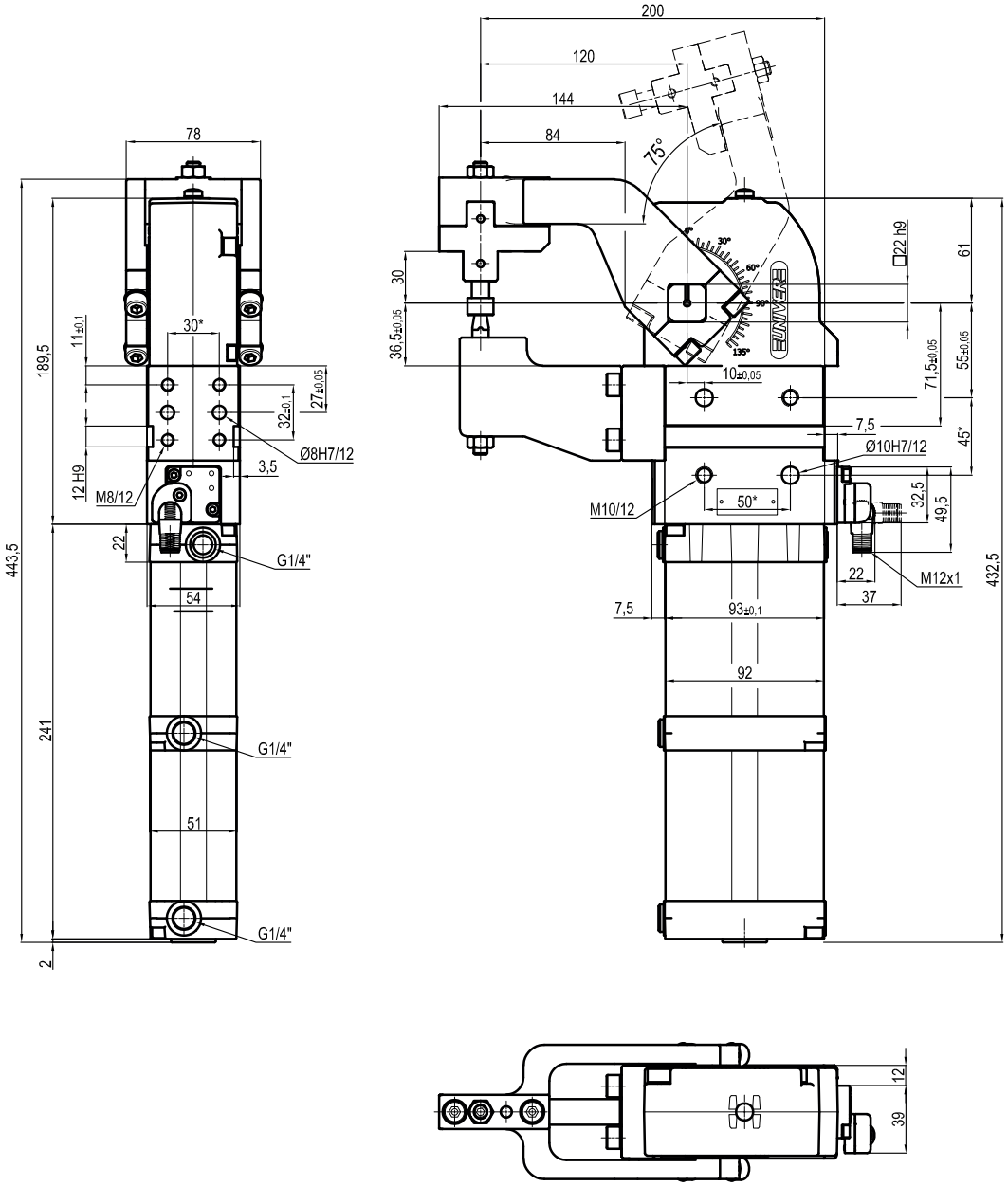

** TOLERANCE BETWEEN DOWELS ± 0,02, BETWEEN SCREW HOLES ± 0,1*
*** AREA TO ACCES ANGLE ADJUSTMENT*

Sensors

Electronic (optical)

DF-K PNP M12
DF-J NPN M12
DF-Y PNP M12 White LED

M | Character mounting

On the moving part

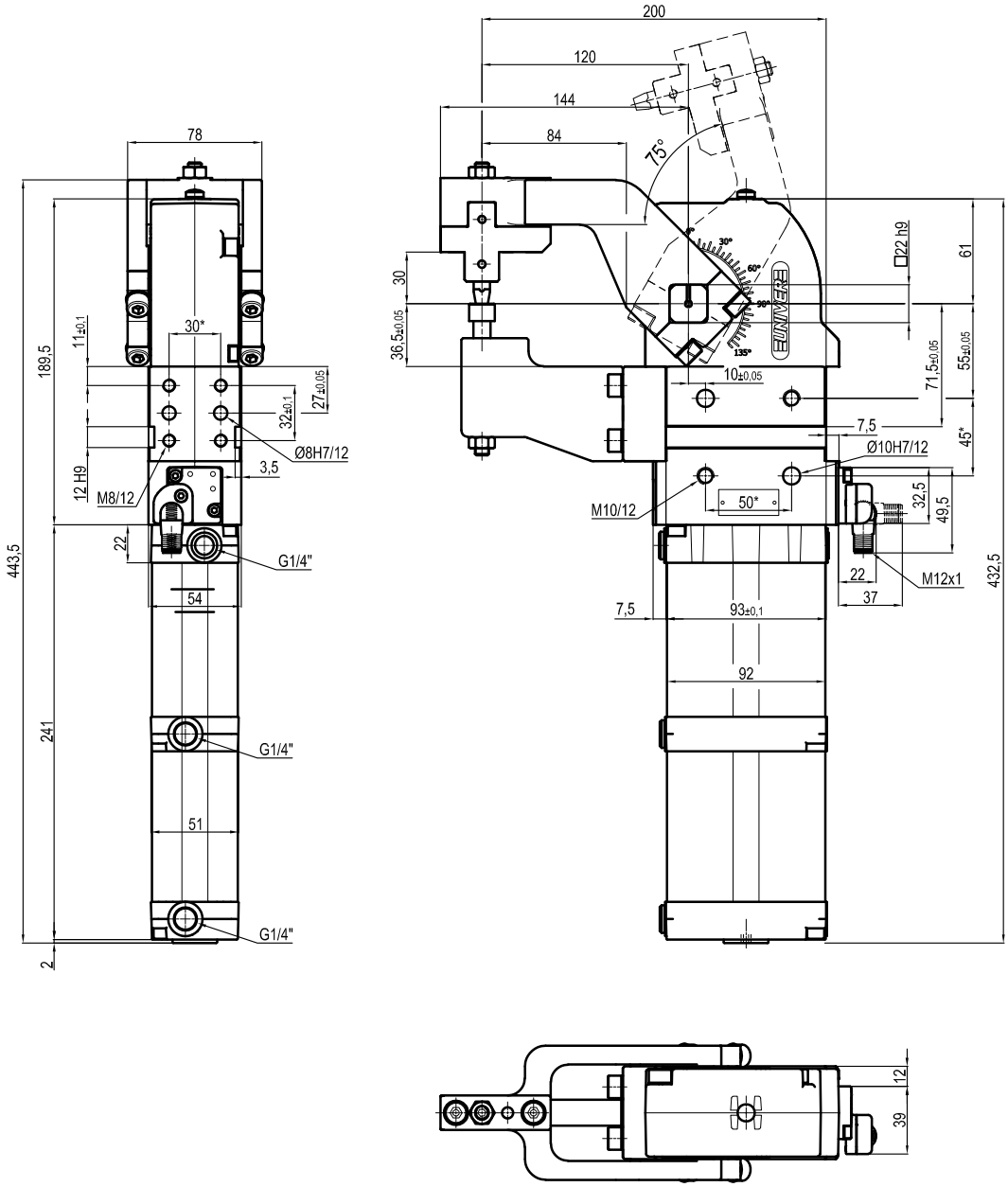

** TOLERANCE BETWEEN DOWELS ± 0,02, BETWEEN SCREW HOLES ± 0,1*
***AREA TO ACCES ANGLE ADJUSTMENT*

Sensors

Electronic (optical)

DF-K PNP M12
DF-J NPN M12
DF-Y PNP M12 White LED

UPR 05

Marking unit with marking head, 5000 Nm

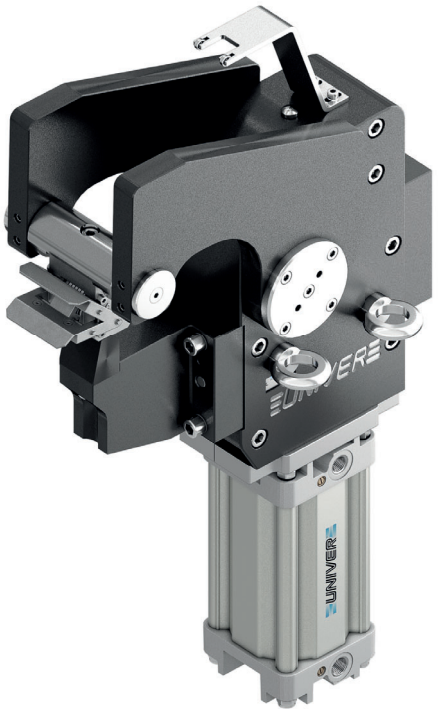

Marking unit with 5000 Nm clamping moment specially designed for marking serial numbers on metal sheets. The integrated compensation allows to mark different metal sheet thickness (up to 2 mm) without further adjustments. High customisation rate thanks to the possibility to choose the marking position and the marking head type: number of characters, character height and depth.

- Marking head up to 7 characters
- Integrated compensation up to 2 mm
- Automatic or manual marking head available
- Possibility to orient the marking surface
- 73° opening angle
- Optical sensor
- Fully protected Internal mechanical system

CHARACTERISTICS

Operating temperature	**5° ÷ 45° C**
Min./Max. Operating pressure	**0,4 / 0,6 MPa**
Opening angle	**73°**
Cylinder bore Ø	**100 mm**
Marking force (0,5 MPa)	80 mm **(38,5 KN)** 130 mm **(27,5 KN)**
Moment (0,55 Mpa)	**5000 Nm**
Weight	80 mm **(71 Kg)** 130 mm **(77 Kg)**
Air cycle (0,5 MPa)	**11,2 Nl**
Pneumatic supply ports	**G1/2**
Sensor	**electronic (optical)**
Supply voltage	**10 ÷ 30 Vdc**
IP code	**IP 65**

COMPENSATION

OPTICAL SENSOR

CODIFICATION KEY

UPR	05	**08**	73	**M**	EE	**S**	0	
1	2	3	4	5	6	7	8	9

1 SERIES
UPR = UNICLAMP Marking units

2 VERSION
05 = 5000 Nm Ø 100 mm cylinder

3 SIZE
08 = 80 mm
13 = 130 mm

4 OPENING ANGLE
73 = 73° Fixed opening angle

5 MARKING HEAD POSITION
M = on the moving part
F = on the fixed part

6 PROGRESSIVE NUMBERING
EE = Standard version
Progressive numbers are assigned by the Sales Dept.

7 CONNECTIONS
S = Left side (Standard)
D = Right side
F = Front side
P = Rear side

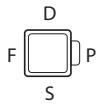

8 PRODUCT REVISION
Assigned by UNIVER

9 ATEX
X = ATEX option
See ATEX Catalogue for types and versions

08/F | Character mounting

On the fixed part

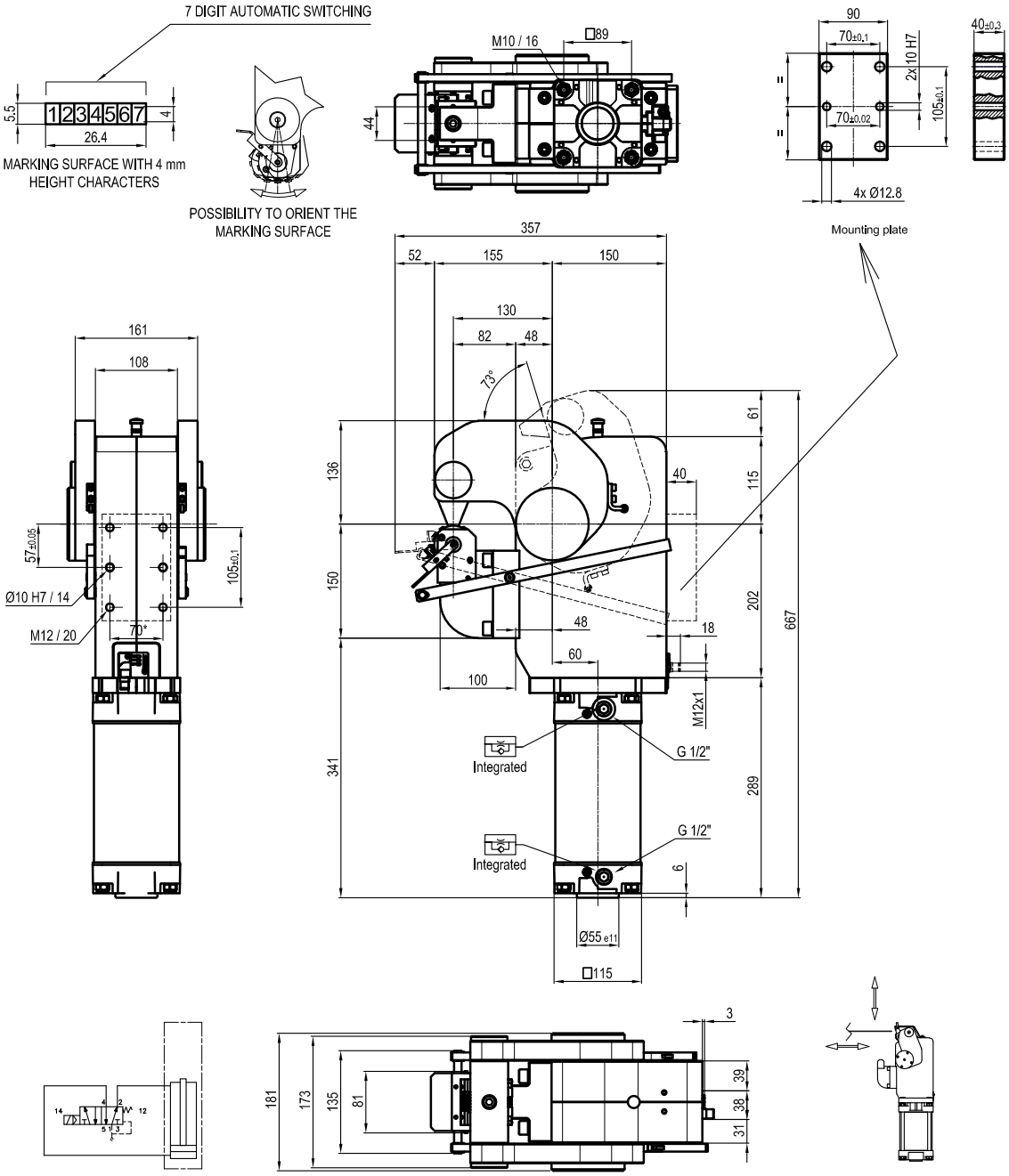

** TOLERANCE BETWEEN DOWELS ± 0,02, BETWEEN SCREW HOLES ± 0,1*

Sensors

Electronic (optical)

DF-K PNP M12
DF-J NPN M12
DF-Y PNP M12 White LED

13/F Character mounting

On the fixed part

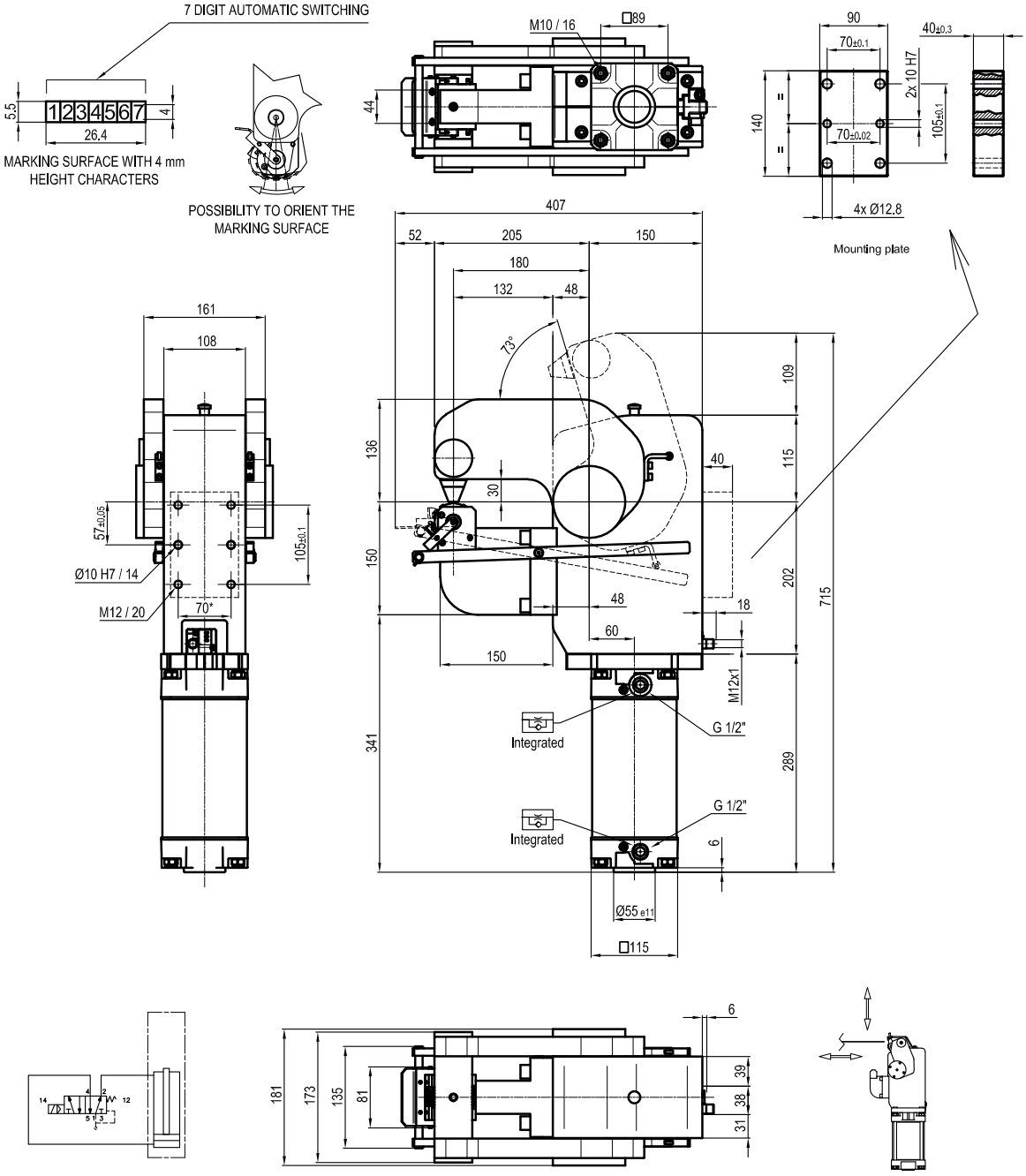

** TOLERANCE BETWEEN DOWELS ± 0,02, BETWEEN SCREW HOLES ± 0,1*

Sensors

Electronic (optical)

DF-K PNP M12
DF-J NPN M12
DF-Y PNP M12 White LED

08/M Character mounting

On the moving part

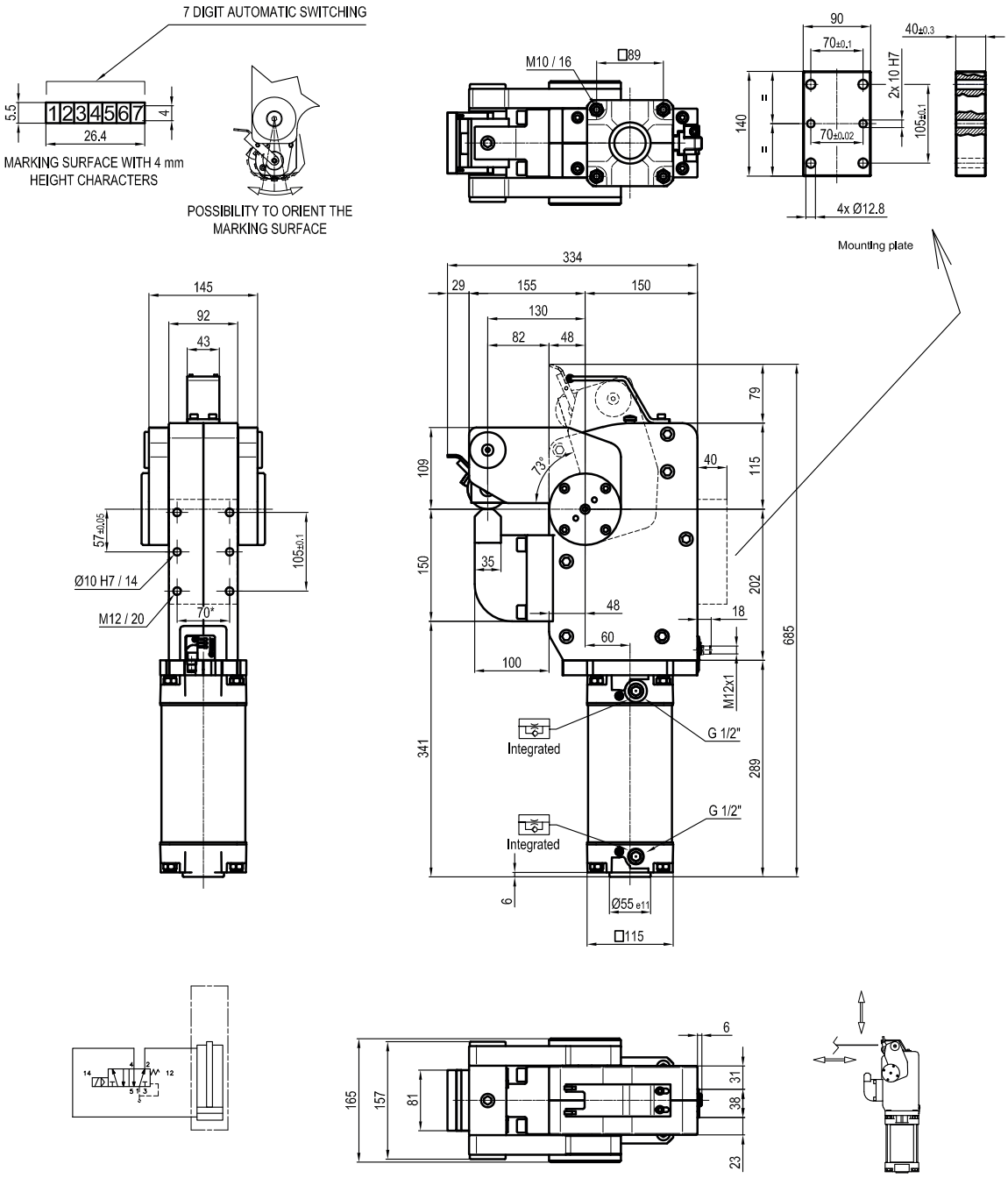

** TOLERANCE BETWEEN DOWELS ± 0,02, BETWEEN SCREW HOLES ± 0,1*

Sensors

Electronic (optical)

DF-K PNP M12
DF-J NPN M12
DF-Y PNP M12 White LED

13/M Character mounting

On the moving part

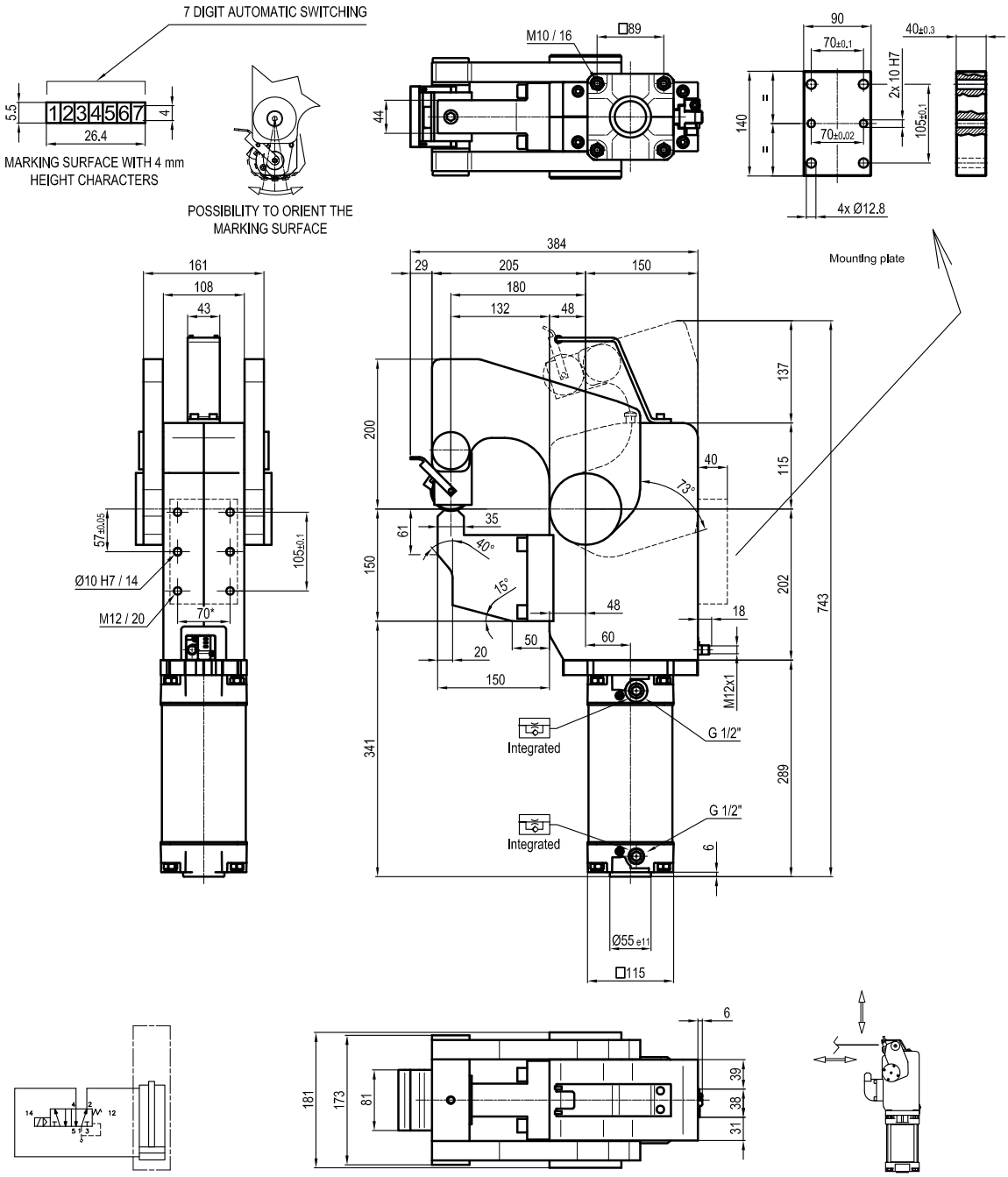

** TOLERANCE BETWEEN DOWELS ± 0,02, BETWEEN SCREW HOLES ± 0,1*

Sensors

Electronic (optical)

DF-K PNP M12
DF-J NPN M12
DF-Y PNP M12 White LED

UPR 11

Marking unit with marking head, 12000 Nm

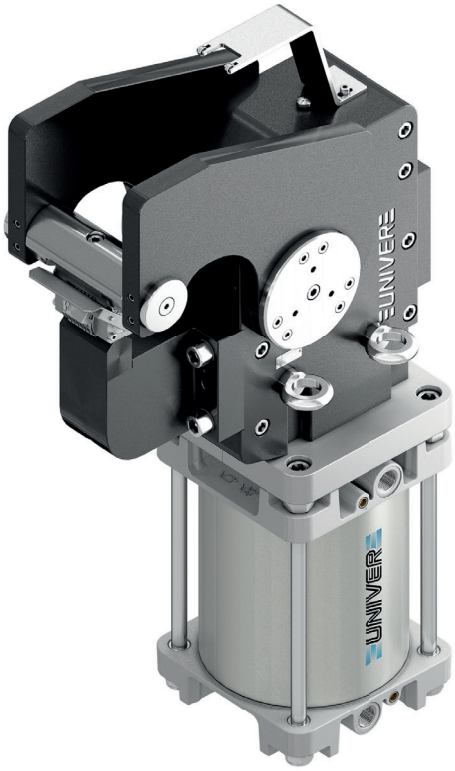

Marking unit with 12000Nm clamping moment specially designed for marking serial numbers on metal sheets. The integrated compensation allows to mark different metal sheet thickness (up to 2 mm) without further adjustments. High customisation rate thanks to the possibility to choose the marking position and the marking head type: number of characters, character height and depth.

- Marking head up to 8 characters
- Integrated compensation up to 2 mm
- Automatic or manual marking head available
- Possibility to orient the marking surface
- 73° opening angle
- Electronic sensor
- Fully protected internal mechanical system

CHARACTERISTICS

Operating temperature	**5° ÷ 45° C**
Min./Max. Operating pressure	**0,4 / 0,6 MPa**
Opening angle	**73°**
Cylinder bore Ø	**200 mm**
Marking force (0,5 MPa)	**62 KN**
Moment (0,55 Mpa)	**12000 Nm**
Weight	**133 kg**
Air cycle (0,5 MPa)	**55,5 Nl**
Pneumatic supply ports	**G3/4**
Sensor	**electronic (optical)**
Supply voltage	**10 ÷ 30 Vdc**
IP code	**IP 65**

COMPENSATION

OPTICAL SENSOR

CODIFICATION KEY

UPR	11	**13**	73	**M**	EE	**S**	0	
1	2	3	4	5	6	7	8	9

1 SERIES
UPR = UNICLAMP Marking units

2 VERSION
11 = 12000 Nm Ø200 mm cylinder

3 SIZE
13 = 130 mm

4 OPENING ANGLE
73 = 73° Fixed opening angle

5 MARKING HEAD POSITION
M = on the moving part
F = on the fixed part

6 PROGRESSIVE NUMBERING
EE = Standard version
Progressive numbers are assigned by the Sales Dept.

7 CONNECTIONS
S = Left side (Standard)
D = Right side
F = Front side
P = Rear side

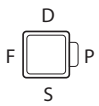

8 PRODUCT REVISION
Assigned by UNIVER

9 ATEX
X = ATEX option
See ATEX Catalogue for types and versions

F Character mounting

On the fixed part

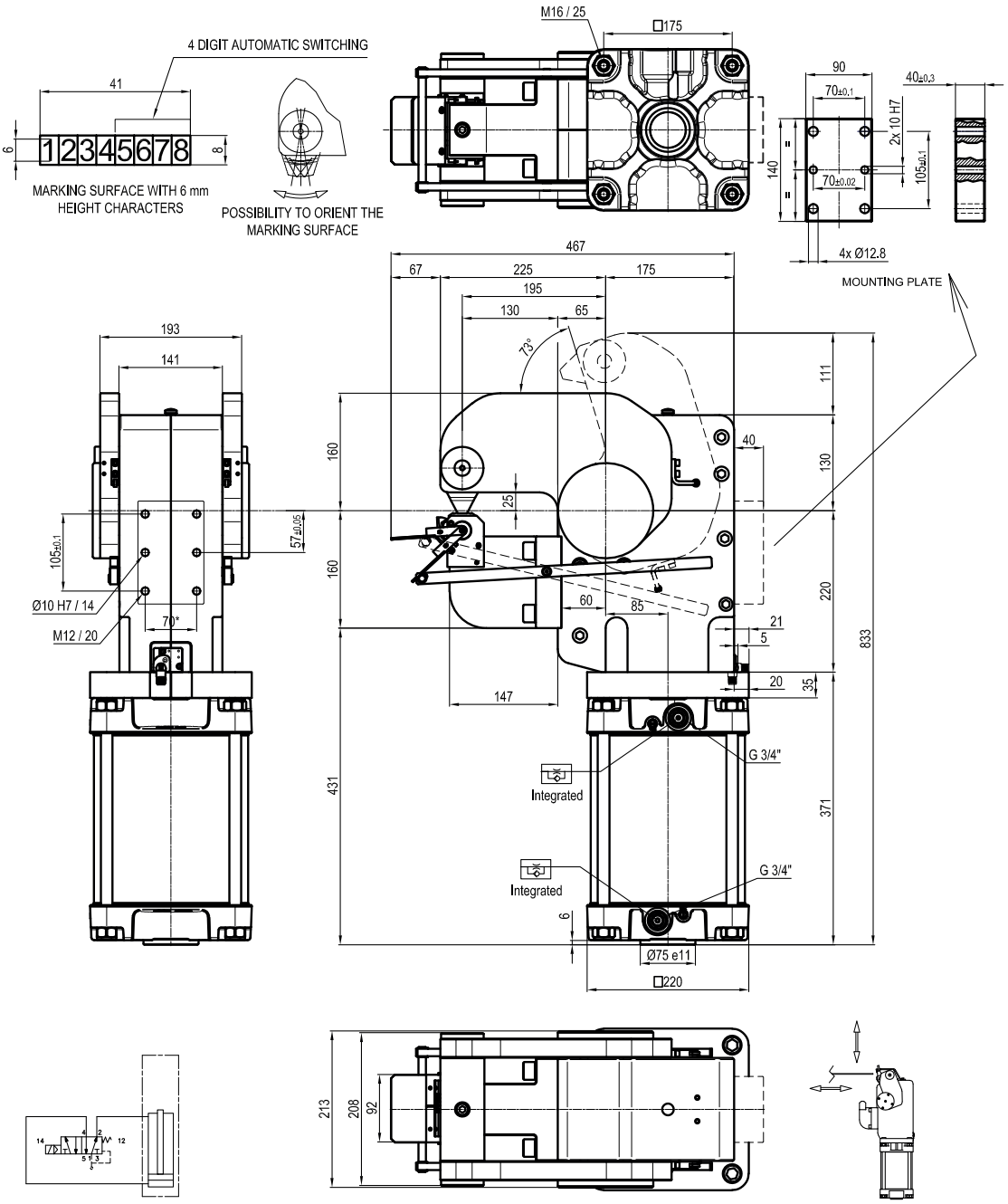

** TOLERANCE BETWEEN DOWELS ± 0,02, BETWEEN SCREW HOLES ± 0,1*

Sensors

Electronic (optical)

DF-K PNP M12
DF-J NPN M12
DF-Y PNP M12 White LED

M | Character mounting

On the moving part

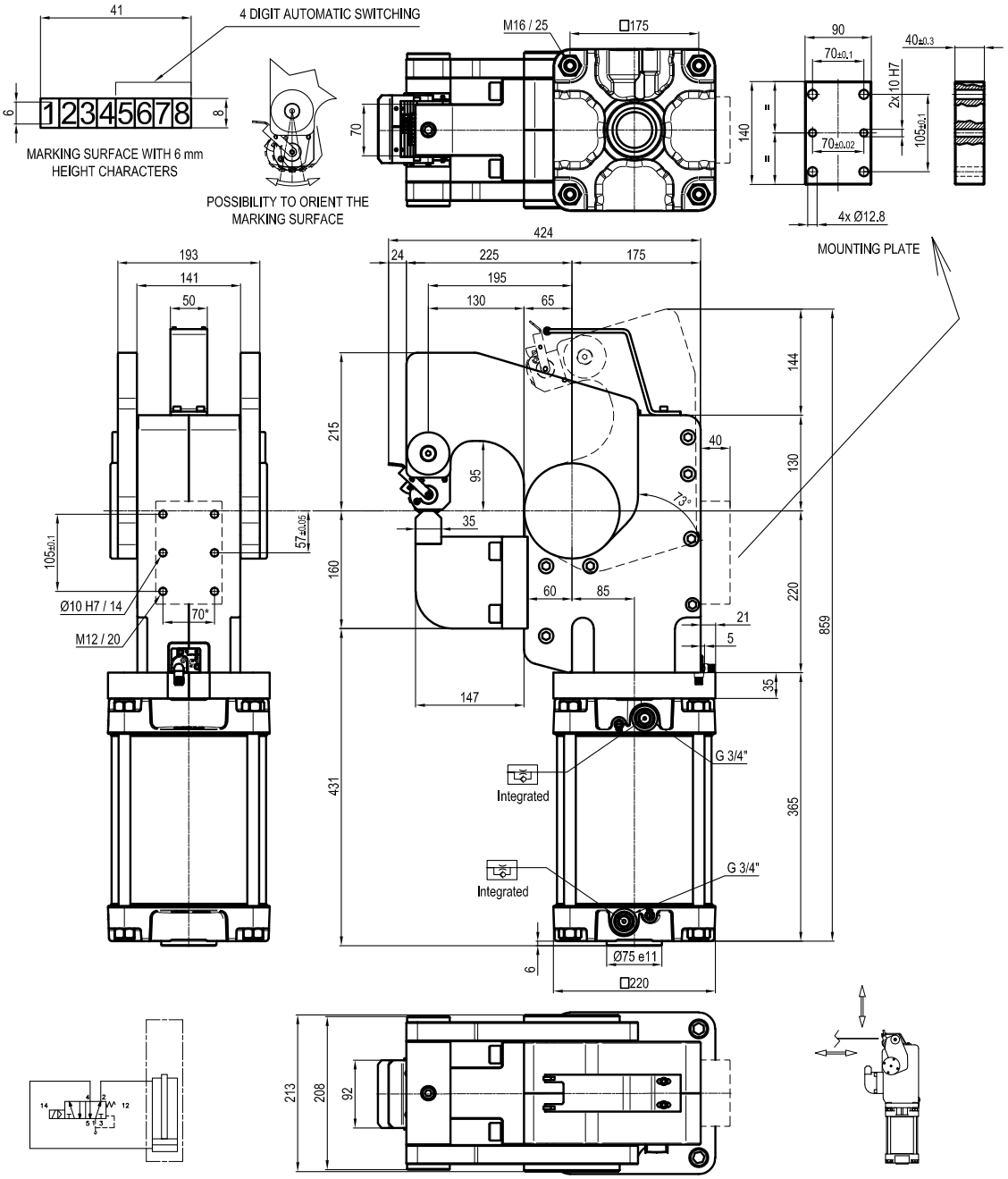

** TOLERANCE BETWEEN DOWELS ± 0,02, BETWEEN SCREW HOLES ± 0,1*

Sensors

Electronic (optical)

DF-K PNP M12
DF-J NPN M12
DF-Y PNP M12 White LED

Industrial Automation

UNIVER S.p.A.
Headquarters

20128 **Milano**
Via Eraclito, 31
Tel. +39 02 25298.1
Fax +39 02 2575254
info@univer-group.com
www.univer-group.com

UNIVER SERVICE S.r.l.
Headquarters

20128 **Milano**
Via Empedocle, 20
Tel. +39 02 25298.1
Fax +39 02 25298370
universervice@universervice.it
www.universervice.it

Branch Offices

LOMBARDIA
20099 - Sesto San Giovanni **Milano**
Via G. di Vittorio, 307/20
Tel. +39 02 26261304
Fax +39 02 24300375
universervice@universervice.it

PIEMONTE/LIGURIA/VALLE D'AOSTA
10071 Borgaro Torinese **Torino**
Via Veneto, 18
Tel. +39 011 4501871
Fax +39 011 4502898
torino@universervice.it

VENETO/FRIULI VENEZIA-GIULIA TRENTINO-ALTO ADIGE
30030 Vigonovo **Venezia**
Via Prima strada 16/A - Loc. Galta
Tel. +39 049 9834140
Fax +39 049 9833972
vigonovo@universervice.it

EMILIA ROMAGNA
40069 Zola Predosa **Bologna**
Via Balzani, 5
Tel. +39 051 753907
Fax +39 051 6184751
bologna@universervice.it

CENTRO/SUD
40069 Zola Predosa **Bologna**
Via Balzani, 5
Tel. +39 051 753907
Fax +39 051 6184751
bologna@universervice.it

UNIVER DO BRASIL Ltda
BRAZIL - 13474-764
Americana **São Paulo**
Rua do Polyester, 29
Distrito Industrial Abdo Najar
Tel. +55 19 3113-9400
Fax +55 19 3113-9405
atendimento@univer.com.br

UNIVER CHINA
CHINA - Shanghai
399 Fu Te North Road,
Free Zone, Pudong
info@univer-china.com

UNIVER FRANCE S.a.s.
FRANCE - 68000
Colmar
1, rue Denis Papin
Tel. +33 3 89210900
Fax +33 3 89216850
info@univer-france.fr

UNIVER G.m.b.H.
GERMANY - D-65428
Rüsselsheim
Eisenstraße 51
Tel. +49 6142 408320
Fax +49 6142 4083290
info@univer-gmbh.de

UNIVER NORTH AMERICA
USA - 48312
Sterling Heights - **Michigan**
6620 Cobb Drive
Tel. +1 248 299 0525
Fax +1 248 299 0528
info@univer-group.us

UNIVER POLSKA Sp. z o.o.
POLAND - 25-663
Kielce
ul. K. Olszewskiego 21E
Tel. +48 41 278 72 53
Fax +48 41 278 72 54
univer@univer-group.pl

UNIVER S.L.
SPAIN - 08210
Barbera Del Valles **Barcelona**
Ronda Industria, 26 - 28
Tel. +34 93 7297360
Fax +34 93 7297380
univer@univerweb.com

www.univer-group.com

Distributors worldwide:
Get in touch with UNIVER Sales Department or visit our website www.univer-group.com

Univer S.p.A. reserves the right to modify technical features of its products with no obligation to issue prior notice