B11

ISO 15218 - 10 mm Nanovalves - 1 W standard

- Flow-rate: 10 Nl/min
- Quick response time: 3 ms
- ISO 15218 interface
- 3/2 NC version
- Led standard

TECHNICAL CHARACTERISTICS

Ambient temperature	-5 ÷ +50 °C
Fluid temperature	Max +50 °C
Fluid	10 µm filtered air, with or without lubrication
Ways/Positions	**3/2 NC, 3/2 NO**
Pressure	Max 7 bar
Control	electric
Return	mechanical spring
Operating frequency	5 Hz
Assembly	no. 2 screws M1,7
Connections	ISO 15218 interface
Nominal Ø (mm)	0,7 (3/2 NC) (3/2 NO)
Nominal flow rate (Nl/min)	10

CONSTRUCTIVE CHARACTERISTICS

Valve body	self-extinguishing technopolymer
Seals	VITON/NBR
Components	stainless steel - brass

ELECTRIC CHARACTERISTICS

Voltage	24 VDC (12V DC upon request)
Voltage tolerance	±10%
Power consumption	1 W
Electrical connection	connector D535 U40 (IP65), welded pin (IP00), Molex
LED	yellow (standard)
Manual override	monostable button

Substructure (ISO 15218)

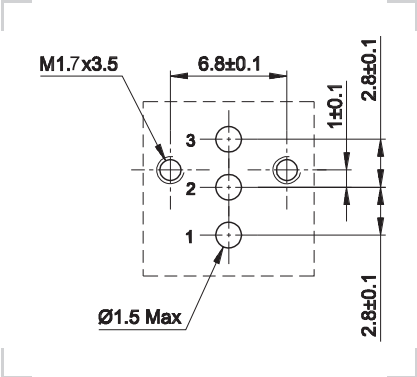

1 = Supply port
2 = Use
3 = Exhaust

CODIFICATION KEY

B	1	1	-	4	0	1	L	2	4	D
1				2	3	4	5	6		

1 Series
B11 = ISO 15218 - 10 mm Nanovalves

2 Model
4 = Monostable

3 Type
0 = 3/2 NC
1 = 3/2 NO

4 Function
1 = With manual override (L variant)
2 = Without manual override (L variant)
3 = With manual override (P variant)
4 = Without manual override (P variant)
5 = With manual override (M variant)
6 = Without manual override (M variant)

5 Variant
L = 90° connector (protected pins)
M = In-line connector protected pins (upon request)
P = In-line connector (for assembly on electronic board)

6 Voltage
24D = 24 V DC
12D = 12 V DC (upon request)

Fixing screws standard supplied. Max tightening torque 0,15 Nm
Other versions upon request: in-line cables and 90° cables

Subject to change

90° Connector - protected pins

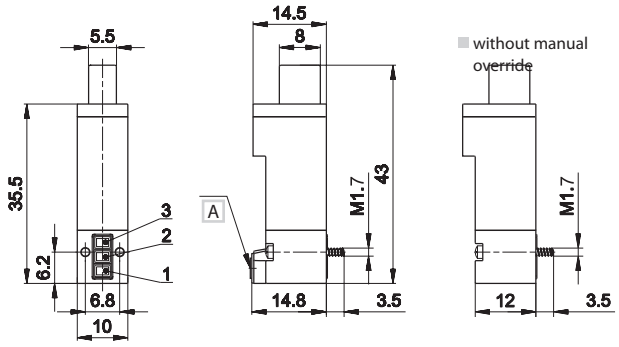

	Symbol	Pressure bar	Ø mm	Resp. Time (ms) En.	Resp. Time (ms) De-en.	Weight Kg	Part no.
3/2 NC	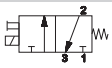	0÷7	0,7	3	3,5	0,0108	**B11-401L24D**(a)
3/2 NC	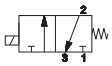	0÷7	0,7	3	3,5	0,0107	**B11-402L24D**(b)

A Manual override

1 = Supply port
2 = Use
3 = Exhaust

D-535U40300/500

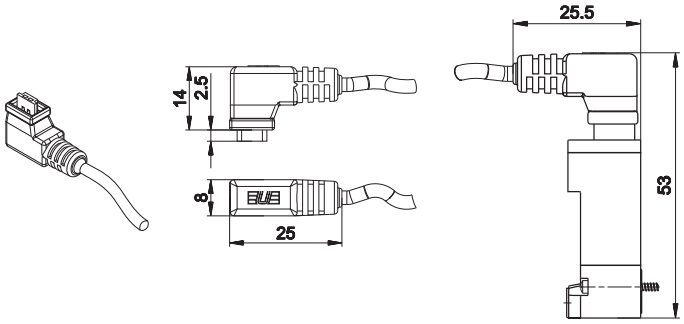

single connector with 0,3-0,5 m wire
weight Kg: 0,05 **D-535U40300 wire L = 300 mm**
0,07 **D-535U40500 wire L = 500 mm**

3

In-line PIN (for assembly on electronic board)

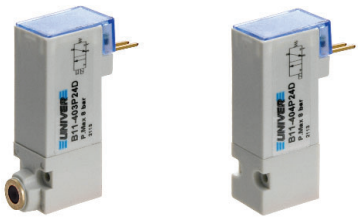

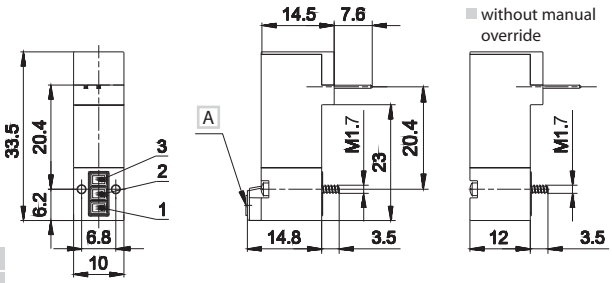

	Symbol	Pressure bar	Ø mm	Resp. Time (ms) En.	Resp. Time (ms) De-en.	Weight Kg	Part no.
3/2 NC	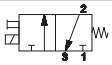	0÷7	0,7	3	3,5	0,0104	**B11-403P24D**(a)
3/2 NC	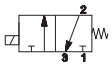	0÷7	0,7	3	3,5	0,0103	**B11-404P24D**(b)

A Manual override

1 = Supply port
2 = Use
3 = Exhaust

(a) = with manual override (b) = without manual override

Subject to change

B10

ISO 15218 - 10 mm Nanovalves - low power consumption

- Low input standard: 0,3 W
- Flow-rate: 10 Nl/min
- Quick response time: 3 ms
- ISO 15218 interface
- 3/2 NC version
- Led standard

Upon request:
- Bistable version

TECHNICAL CHARACTERISTICS

Ambient temperature	-5 ÷ +50 °C
Fluid temperature	Max +50 °C
Fluid	10 µm filtered air, with or without lubrication
Ways/Positions	**3/2 NC**
Pressure	Max 7 bar
Control	electric
Return	mechanical spring
Operating frequency	5 Hz
Assembly	no. 2 screws M1,7
Connections	ISO 15218 interface
Nominal Ø (mm)	0,7 mm
Nominal flow rate (Nl/min)	10

CONSTRUCTIVE CHARACTERISTICS

Valve body	self-extinguishing technopolymer
Seals	VITON/NBR
Components	stainless steel - brass

ELECTRIC CHARACTERISTICS

Voltage	24 VDC (12V DC upon request)
Voltage tolerance	±10%
Power consumption	0,3 W (speed-up 1,3 W)
Electrical connection	connector D535 U40 (IP65), welded pin (IP00), Molex
LED	yellow (standard)
Manual override	monostable button

Substructure (ISO 15218)

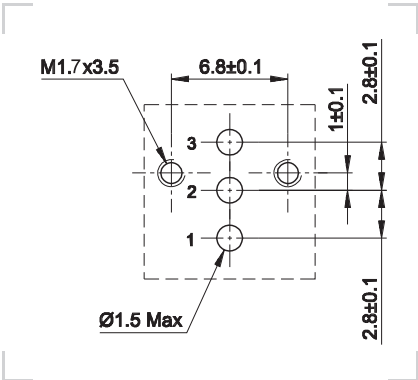

1 = Supply port
2 = Use
3 = Exhaust

CODIFICATION KEY

B	1	0	-	4	0	1	L	2	4	D
1				2	3	4	5	6		

1 Series
B10 = ISO 15218 10 mm Nanovalves low power consumption

2 Model
4 = Monostable

3 Type
0 = 3/2 NC

4 Function
1 = With manual override (L variant)
2 = Without manual override (L variant)
3 = With manual override (P variant)
4 = Without manual override (P variant)
5 = With manual override (M variant)
6 = Without manual override (M variant)

5 Variant
L = 90° connector (protected pins)
M = In-line connector protected pins (upon request)
P = In-line connector (for assembly on electronic board)

6 Voltage
24D = 24 V DC
12D = 12 V DC (upon request)

Fixing screws standard supplied. Max tightening torque 0,15 Nm
Other versions upon request: in-line cables and 90° cables

Subject to change

90° Connector - protected pins

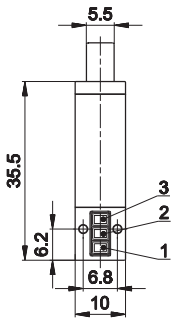

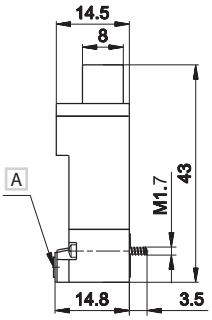

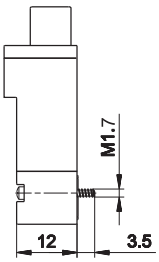

	Symbol	Pressure bar	Ø mm	Resp. Time (ms) En.	Resp. Time (ms) De-en.	Weight Kg	Part no.
3/2 NC	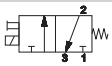	0÷7	0,7	3	3,5	0,0108	**B10-401L24D**(a)
3/2 NC	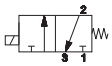	0÷7	0,7	3	3,5	0,0107	**B10-402L24D**(b)

A Manual override

1 = Supply port
2 = Use
3 = Exhaust

D-535U40300/500

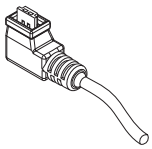

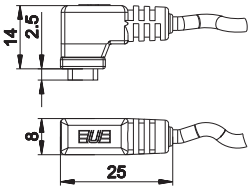

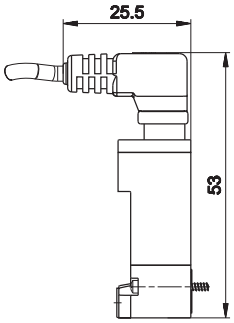

single connector with 0,3-0,5 m wire
weight Kg: 0,05 **D-535U40300 wire L = 300 mm**
0,07 **D-535U40500 wire L = 500 mm**

3

In-line PIN (for assembly on electronic board)

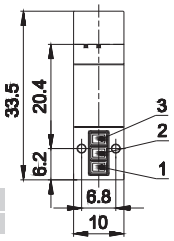

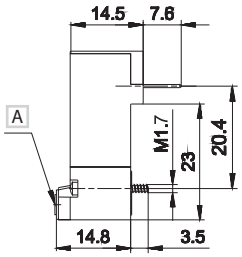

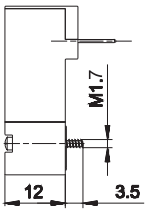

	Symbol	Pressure bar	Ø mm	Resp. Time (ms) En.	Resp. Time (ms) De-en.	Weight Kg	Part no.
3/2 NC	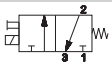	0÷7	0,7	3	3,5	0,0104	**B10-403P24D**(a)
3/2 NC	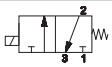	0÷7	0,7	3	3,5	0,0103	**B10-404P24D**(b)

A Manual override

1 = Supply port
2 = Use
3 = Exhaust

B12

ISO 15218 - 10 mm Nanovalves - high flow rate

- High flow-rate: 30 Nl/min
- Quick response time: 3 ms
- ISO 15218 interface
- 3/2 NC version
- Led standard

Upon request:
- 40 Nl/min flow rate version

TECHNICAL CHARACTERISTICS

Ambient temperature	-5 ÷ +50 °C
Fluid temperature	Max +50 °C
Fluid	10 µm filtered air, with or without lubrication
Ways/Positions	**3/2 NC**
Pressure	Max 7 bar
Control	electric
Return	mechanical spring
Operating frequency	5 Hz
Assembly	no. 2 screws M1,7
Connections	ISO 15218 interface
Nominal Ø (mm)	1,3 mm
Nominal flow rate (Nl/min)	28

CONSTRUCTIVE CHARACTERISTICS

Valve body	self-extinguishing technopolymer
Seals	VITON/NBR
Components	stainless steel - brass

ELECTRIC CHARACTERISTICS

Voltage	24 VDC (12V DC upon request)
Voltage tolerance	±10%
Power consumption	0,6 W (speed-up 5,5 W)
Electrical connection	connector D535 U40 (IP65), welded pin (IP00), Molex
LED	yellow (standard)
Manual override	monostable button

Substructure (ISO 15218)

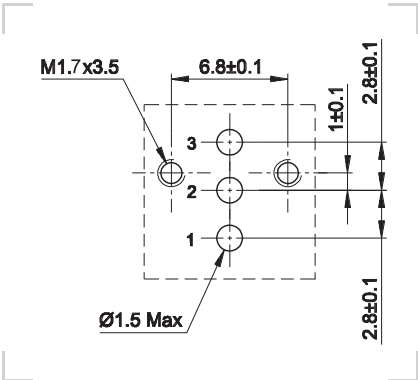

1 = Supply port
2 = Use
3 = Exhaust

CODIFICATION KEY

B	1	2	-	4	0	1	L	2	4	D
1				2	3	4	5	6		

1 Series
B12 = ISO 15218 - 10 mm Nanovalves - high flow rate

2 Model
4 = Monostable

3 Type
0 = 3/2 NC

4 Function
1 = With manual override (L variant)
2 = Without manual override (L variant)
3 = With manual override (P variant)
4 = Without manual override (P variant)
5 = With manual override (M variant)
6 = Without manual override (M variant)

5 Variant
L = 90° connector (protected pins)
M = In-line connector protected pins (upon request)
P = In-line connector (for assembly on electronic board)

6 Voltage
24D = 24 V DC
12D = 12 V DC (upon request)

Fixing screws standard supplied. Max tightening torque 0,15 Nm
Other versions upon request: in-line cables and 90° cables, nominal flow rate 40 Nl/min

Subject to change

90° Connector - protected pins

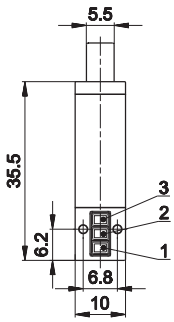

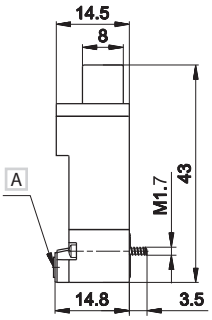

Without manual override

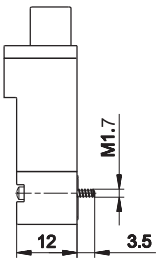

	Symbol	Pressure bar	Ø mm	Resp. Time (ms) En.	Resp. Time (ms) De-en.	Weight Kg	Part no.
3/2 NC	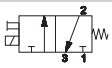	0÷7	1,3	3	3,5	0,0108	**B12-401L24D**(a)
3/2 NC	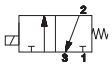	0÷7	1,3	3	3,5	0,0107	**B12-402L24D**(b)

A Manual override

1 = Supply port
2 = Use
3 = Exhaust

D-535U40300/500

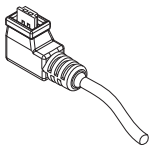

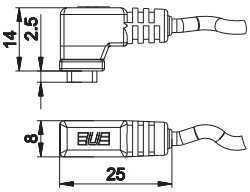

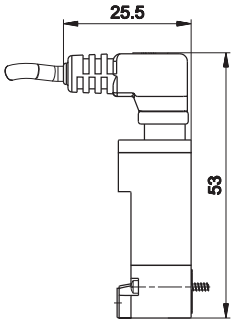

single connector with 0,3-0,5 m wire
weight Kg: 0,05 **D-535U40300 wire L = 300 mm**
0,07 **D-535U40500 wire L = 500 mm**

3

In-line PIN (for assembly on electronic board)

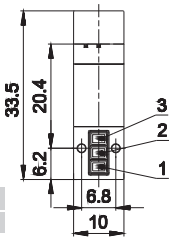

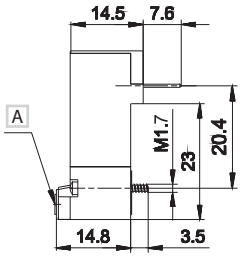

without manual override

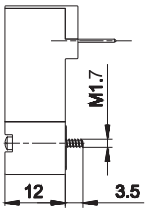

	Symbol	Pressure bar	Ø mm	Resp. Time (ms) En.	Resp. Time (ms) De-en.	Weight Kg	Part no.
3/2 NC	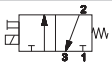	0÷7	1,3	3	3,5	0,0104	**B12-403P24D**(a)
3/2 NC	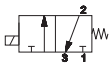	0÷7	1,3	3	3,5	0,0103	**B12-404P24D**(b)

A Manual override

1 = Supply port
2 = Use
3 = Exhaust

(a) = with manual override (b) = without manual override

B

10 mm nanovalves

- Flow rate 12 Nl/min
- Interface with conveyed discharge or discharge in the air
- Versions 3/2 normally open (NO) and normally closed (NC)
- Interchangeable coil (U04) - rotation by 180°
- Molex-type electrical connector or loose wires

ATEX version available upon request

CE Ex II 3 GD c nA II T5-10°C ≤ Ta ≤ 45°C

TECHNICAL CHARACTERISTICS

Ambient temperature	-5 ÷ +50 °C
Fluid temperature	Max +50 °C
Fluid	10 µm filtered air, with or without lubrication
Commutation system	poppet valve
Ways/Positions	**3/2 NC, 3/2 NO**
Pressure	Max 8 bar
Control	electric
Return	mechanical spring
Connections	on sub-base
Nominal Ø	0,5÷0,6 mm
Nominal flow rate	9÷12 Nl/min
Max frequency	2300 ÷ 3000 cycles/min

CONSTRUCTIVE CHARACTERISTICS

Valve body	technopolymer (aluminium external cover)
Seals	nitrile rubber
Components	stainless steel - treated brass

ELECTRIC CHARACTERISTICS

Coil	U04 DE series
Power consumption	1,2 W (1,35 W with LED) - 0,5 W (speed-up 1,2 W)
Electrical connection	Molex bipolar connector or loose cables
Voltage	12 V DC - 24 V DC
Manual override	recessed button - 1 position

Substructure

Conveyed discharge

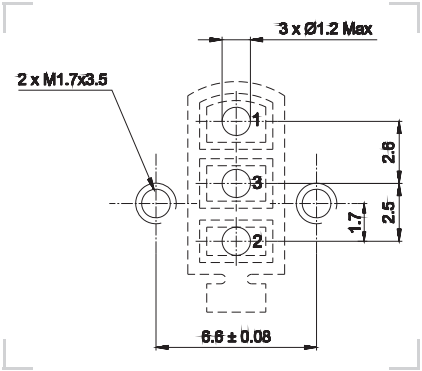

Discharge in the air

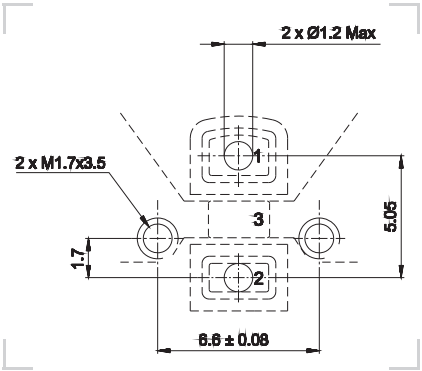

NC	NO
1 = Supply port	**1** = Exhaust
2 = Use	**2** = Use
3 = Exhaust	**3** = Supply port

Valves with conveyed discharge

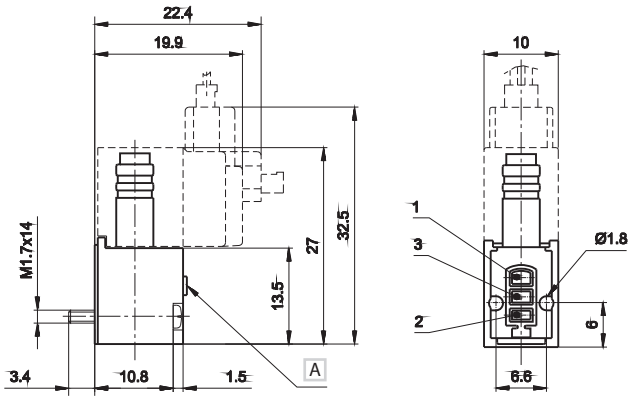

1 = Supply port
2 = Use
3 = Exhaust

A Manual override

	Symbol	Nominal Ø	Flow rate Nl/min.	Pressure bar	Response Time (ms) En.	Response Time (ms) De-en.	Weight Kg	Part no.
3/2 NC	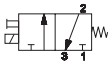	0,5	1→2 = 9 2→3 = 12	1,5÷8 (a)	9	10	0,007	**B-101N**
3/2 NO	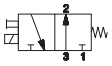	0,5	3→2 = 9 2→1 = 10	0÷8	18	8	0,007	**B-121N**

Valves with discharge in the air

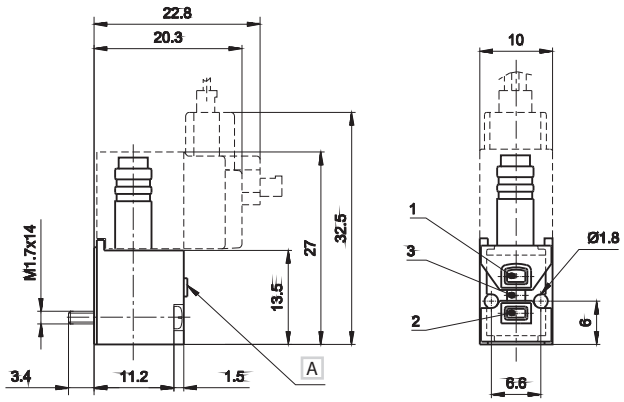

1 = Supply port
2 = Use
3 = Exhaust

A Manual override

	Symbol	Nominal Ø	Flow rate Nl/min.	Pressure bar	Response Time (ms) En.	Response Time (ms) De-en.	Weight Kg	Part no.
3/2 NC	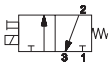	0,6	1→2 = 12 2→3 = 15	1,5÷8 (a)	9,5	9	0,007	**B-102N**

>> Coils

DE-352
24VDC - 1,2 W

DE-355
24VDC - 0,5 W

DE-452
24VDC - 1,35 W

U04 with integrated upward 90° connector
Weight: 0,006

DE-552
24VDC - 1,2 W

DE-555
24VDC - 0,5 W

DE-652
24VDC - 1,35 W

U04 with in-line connector
Weight: 0,006

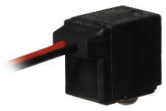

DE-052L030
24VDC - 1,2 W

U04 with loose wires (300 mm lenght)
Weight: 0,008

DE-642I
12VDC - 1,35 W

DE-652I
24VDC - 1,35 W

DE-655I
24VDC - 0,5 W

U04 with in-line connector with protecting cover for complete tightness
Weight: 0,006

(a) = upon request: 0 bar operation
For technical features of coils and connectors, see section **"Accessories>Coils"**
Nanovalves are supplied without coil and connector

A

ISO 15218 - 15 mm Microvalves

- Flow rate max 38 Nl/min
- ISO 15218 interface
- 2/2-3/2 versions - normally open (NO) and normally closed (NC)
- Interchangeable coil - 90° orientation
- Single and multiple sub-bases - single and multipolar electric connection

ATEX version available upon request

CE Ex II 3 GD c nA II T5-10°C ≤ Ta ≤ 45°C

TECHNICAL CHARACTERISTICS

Ambient temperature	-5 ÷ +50 °C	
Fluid temperature	Max +50 °C	
Fluid	10 µm filtered air, with or without lubrication	
Commutation system	poppet	
Ways/Positions	**2/2 NC, 3/2 NC, 2/2 NO, 3/2 NO**	
Pressure	Max 9 bar	
Control	electric	
Return	mechanical spring	
Connections	ISO 15218 interface	
Nominal Ø	1,2	1,5
Nominal flow rate	26	38
Max frequency	2700 cycles/min	

CONSTRUCTIVE CHARACTERISTICS

Valve body	technopolymer (aluminium external cover)
Seals	nitrile rubber
Components	stainless steel, brass

ELECTRIC CHARACTERISTICS

Coil	U05 DD series
Power consumption	2 W DC / 2,3 VA AC (Ø 1,2) - 2,5 W DC / 3,5 VA AC (Ø 1,5)
Electrical connection	15 mm connector - Molex bipolar connector or loose cables
Voltage	24 V DC -12 V DC - 24 V AC - 110 V AC - 230 V AC
Manual override	recessed button - 1 position
	(other manual overrides upon request)
Protection degree with connector	IP65

ISO 15218 Substructure

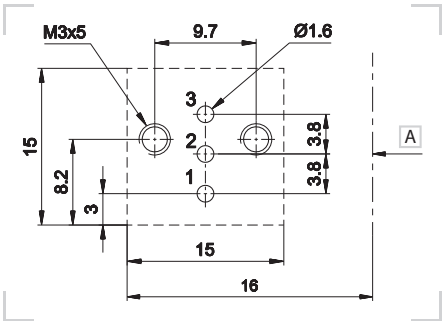

A Pitch

3/2 NC

1 = Supply port
2 = Use
3 = Exhaust

3/2 NO

1 = Exhaust
2 = Use
3 = Supply port

2/2 NO

1 = Exhaust
3 = Supply port

Drilling jig to assemble the valve on a smooth surface with a sealing plate in between. Part no. A-299-11.

15 mm Microvalves

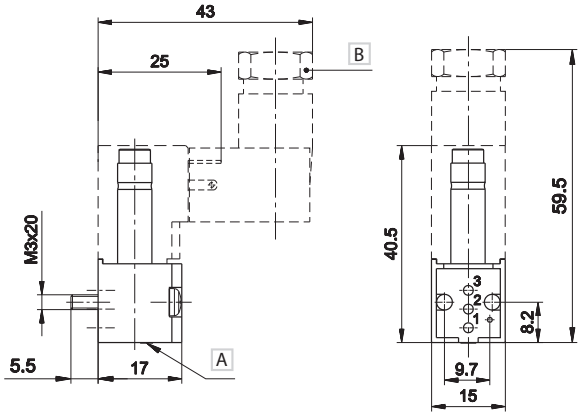

A Manual override
B Possible rotation by 180°

3/2 NC	3/2 NO	2/2 NO
1 = Supply port	1 = Exhaust	1 = Exhaust
2 = Use	2 = Use	3 = Supply port
3 = Exhaust	3 = Supply port	

Microvalves Ø 1,2 for direct current coils 2 W

	Symbol	Pressure bar	Ø mm	Flow rate Nl/min.	Current	Response Time (ms) En.	Response Time (ms) De-en.	Weight (b) Kg	Part no.
2/2 NC		0÷9	1,2	26	DC	11	11	0,018 (0,037)	**A-141N**
2/2 NO		0÷9	1,2	26	DC	11	11	0,018 (0,037)	**A-161N**
3/2 NC		0÷9	1,2	26	DC	11	11	0,018 (0,037)	**A-101N**
3/2 NO		0÷9	1,2	26	DC	11	11	0,018 (0,037)	**A-121N**

Suggested coils	
DD-051 24 V DC - 2 W	Coil with Faston
DD-051L030 24 V DC - 2 W	Coil with flying cables

Upon request 12 V DC

Microvalves Ø 1,5 for direct current coils 2,5 W

	Symbol	Pressure bar	Ø mm	Flow rate Nl/min.	Current	Response Time (ms) En.	Response Time (ms) De-en.	Weight (b) Kg	Part no.
2/2 NC		0÷8	1,5	38	DC	11	11	0,018 (0,037)	**A-142N**
2/2 NO		0÷8	1,5	38	DC	11	11	0,018 (0,037)	**A-162N**
3/2 NC		0÷8	1,5	38	DC	11	11	0,018 (0,037)	**A-102N**
3/2 NO		0÷8	1,5	38	DC	11	11	0,018 (0,037)	**A-122N**

Suggested coils	
DD-052 24 V DC - 2,5 W	Coil with Faston
DD-052L030 24 V DC - 2,5 W	Coil with flying cables

Upon request 12 V DC

Microvalves Ø 1,2 for direct or alternate current

	Symbol	Pressure bar	Ø mm	Flow rate Nl/min.	Current	Response Time (ms) En.	Response Time (ms) De-en.	Weight (b) Kg	Part no.
2/2 NC		0÷9	1,2	26	DC/AC	11	11	0,018 (0,037)	**A-151N**
2/2 NO		0÷9	1,2	26	DC/AC	11	11	0,018 (0,037)	**A-171N**
3/2 NC		0÷9	1,2	26	DC/AC	11	11	0,018 (0,037)	**A-111N**
3/2 NO		0÷9	1,2	26	DC/AC	11	11	0,018 (0,037)	**A-131N**

Suggested coils	
DD-040 24 V AC - 50/60 Hz -2,3 VA **DD-041** 12 V DC - 2 W **DD-050** 48 V AC - 50/60 Hz - 2,3 VA **DD-051** 24 V DC - 2 W **DD-070** 230 V AC - 50/60 Hz - 2,3 VA	Coil with Faston
DD-051L030 24 V DC - 2 W	Coil with flying cables

Upon request 12 V DC

(b) = the weight in brackets refers to coil with faston

For technical data of coils see **"Accessories>Coils"**
Microvalves are supplied without coil and connector

Microvalves Ø 1,5 for direct or alternate current

	Symbol	Pressure	Ø	Flow rate	Current	Response Time (ms)		Weight (b)	Part no.
		bar	mm	Nl/min.		En.	De-en.	Kg	
2/2 NC	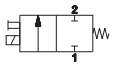	0÷8	1,5	38	DC/AC	11	11	0,018 (0,037)	**A-152N**
3/2 NC	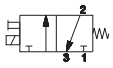	0÷8	1,5	38	DC/AC	11	11	0,018 (0,037)	**A-112N**

Suggested coils	
DD-011 24 V AC - 50/60 Hz - 3,5 VA **DD-013** 230 V AC - 50/60 Hz - 3,5 VA **DD-040** 24 V AC - 50/60 Hz - 2,3 VA **DD-042** 12 V DC - 2,5 W **DD-052** 24 V DC - 2,5 W **DD-060** 48 VAC - 50/60 Hz - 3,5 VA	Coil with Faston
DD-052L030 24 V DC - 2,5 W	Coil with flying cables

Upon request 12 V DC

>> Coils

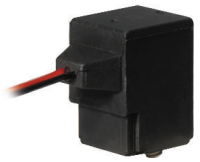

U5 flying cables
weight: 0,019 Kg

DD-051L030
DD-052L030

U05 15 mm
weight: 0,019 Kg

DD-011 **DD-050**
DD-013 **DD-051**
DD-040 **DD-052**
DD-041 **DD-060**
DD-042 **DD-070**

Standard manual override

Operation	Notes	Symbol
1 = with button with tool, 1 position (standard)	metallic	→
2 = with button, 1-2 positions (upon request)	technopolymer red colour	⊖
3 = with front button, 1 position (upon request)	technopolymer red colour	→
4 = with button, 1 position (upon request)	metallic	→

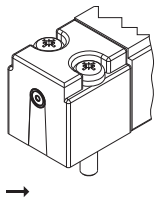

1

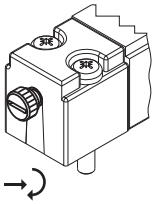

2

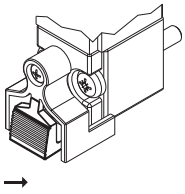

3

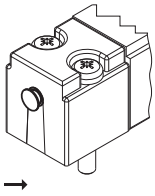

4

(b) = the weight in brackets refers to coil with faston

For technical data of coils see **"Accessories>Coils"**
Microvalves are supplied without coil and connector

Sub-base for external electric connection

Sub-base in extruded anodized aluminium with conveyed supplies and exhausts for assembling NC or NO valves.
If NC and NO valves are assembled on just one base, it is necessary to insert the inverter part A-350 for NO valves.

A - 326A - _ _ (b) G1/8 threaded connections (standard)
A - 326B - _ _ (b) M5 threaded connections (upon request)
A - 326D - _ _ (b) push-in connections tube 4 (upon request)

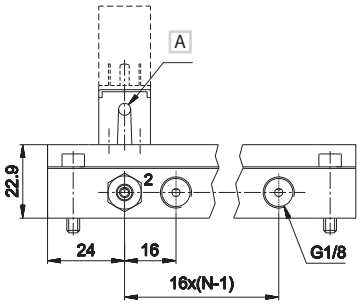

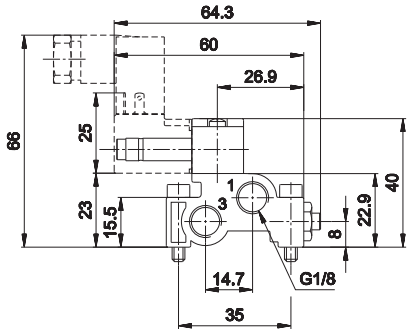

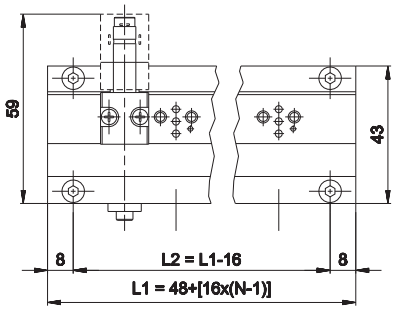

A Manual override

N = Number of valve positions
(b) = Number of positions

3/2 NC
1 = Supply port
2 = Use
3 = Exhaust

3/2 NO
1 = Exhaust
2 = Use
3 = Supply port

2/2 NO
1 = Exhaust
3 = Supply port

3

Sub-base for integrated electric connection

Sub-base in extruded anodized aluminium up to Max 13 stations with sub-D connector 15 pin (upon request up to 23 with connector 25 pin) and G1/8 threaded standard connections, with conveyed supplies and exhausts for assembling NC or NO valves, with integrated coil connection and optical indication of the valve working status.
If both NO and NC valves are assembled on just one sub-base, NC valves are always mounted on the connector side and afterwards the NO valves. The invert plate (part no. A-350) must be installed for NO valves.

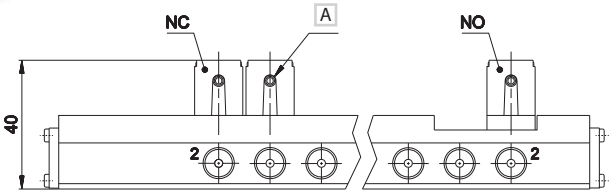

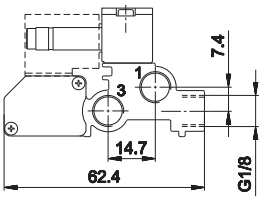

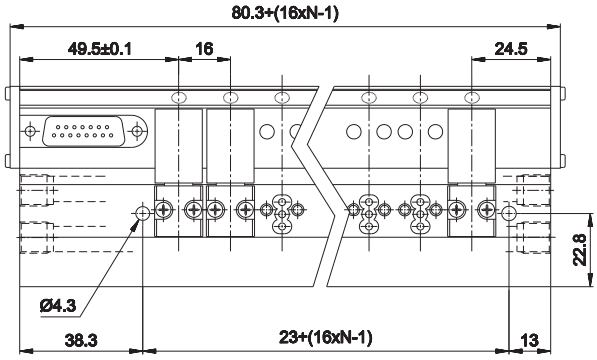

A Manual override

N = Number of valve positions

3/2 NC
1 = Supply port
2 = Use
3 = Exhaust

3/2 NO
1 = Exhaust
2 = Use
3 = Supply port

2/2 NO
1 = Exhaust
3 = Supply port

Subject to change

A-299-11

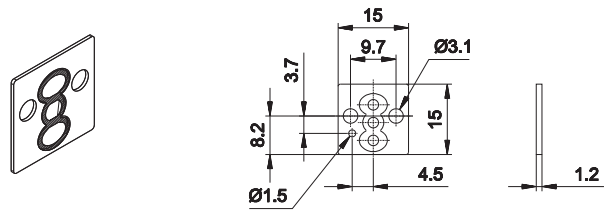

Sealing plate
It blocks the seal in place when the valve is mounted on a smooth surface without a seal housing
material: aluminium
weight: 0,003 Kg

A-301

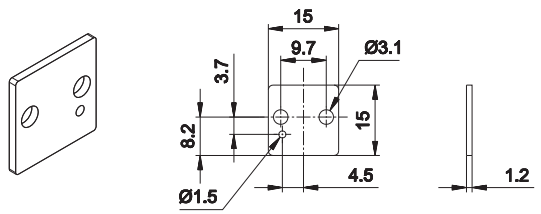

Blank plate
Unused valve stations must be closed with the blank plate
material: aluminium
weight: 0,002 Kg

A-305

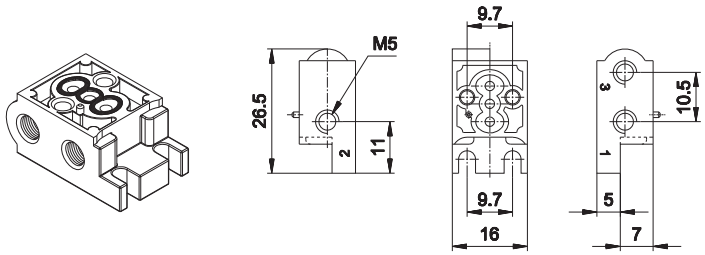

Single base
material: zamak
connection: M5
weight: 0,012 Kg

A-350

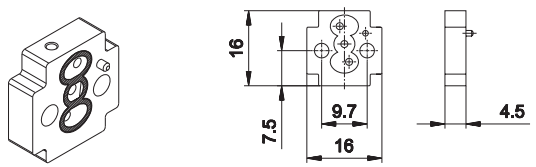

Inverter plate
NO and NC valves can be mounted on a single block inserting this device between the NO valve and the sub-base.
If all installed valves are NO versions, just invert air supply without using the inverter plate.
material: plastic
weight: 0,002 Kg

AA

Miniature electropilots U1

Direct intervention electropilots with poppet valve system and cushioned bottom seals
- Assembly on sub-base, threaded connections on the body, CNOMO interface
- Orientable coil (360°) separated from mechanical part
- Versions: 2/2 3/2 NC - NO
- Original Univer SPEED modular sub-bases

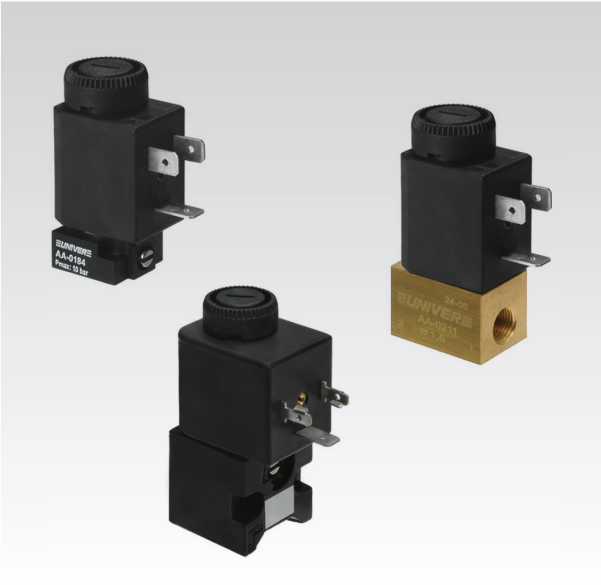

ATEX version available upon request

II 2Gc IIC T5 II 2Dc T100°C

TECHNICAL CHARACTERISTICS

Ambient temperature	-10 ÷ +50 °C
Fluid temperature	Max +95 °C
Fluid	50 µm filtered air, with or without lubrication; neutral gases (upon request other fluids can be used)
Commutation system	direct intervention poppet valve system with cushioned seals
Ways/Positions	**2/2 NC, 3/2 NC, 3/2 NO**[(a)]
Pressure	**2/2, 3/2 NC** = 0 ÷ 10 **3/2 NO** = 3 ÷ 10
Control	electric
Return	mechanical spring
Connections	on sub-base or with threaded connections on the body

	sub-base	**G 1/8**	**M5**	**CNOMO**
Nominal Ø (mm)	1,2 ÷ 1,5	1 ÷ 1,5	1 ÷ 1,5	1,2 ÷ 1,5
Nominal flow rate (Nl/min)	30 ÷ 60	28 ÷ 60	30 ÷ 60	33 ÷ 45

CONSTRUCTIVE CHARACTERISTICS

Materials	see features below

ELECTRIC CHARACTERISTICS

Series	U1	U3
Coil	DA	DC
Power consumption	3,5 W (DC) - 5 VA (AC)	2,5 W (DC) - 3,3 VA (AC)
Connector	AM 5110	AM 5111
Voltage	12 V DC - 24 V DC - 24 V AC - 110 V AC - 230 V AC	
Protection degree	IP65	

For other electric features see section **"Accessories>Coils"**

C US

For electropilots in compliance with CSA/UL certification see the related section "Omologated electropilots"

(a) = Mechanical part designed to keep the air supply always from the body
(Useful in case of assembly of more NC-NO pilots in series to have a unique supply port)

U1 Sleeves - with moving core

Material:	
sleeve	treated brass
cores and spring	stainless steel
seals	nitrile rubber

	Exhaust Ø	Pressure	Weight	Part no.
	mm	bar	Kg	
3/2 NO	1,2	3÷10	0,024	**AA-0150**
3/2 NC	1,5	0÷10	0,022	**AA-0157**
2/2 NC	-	0÷10	0,022	**AA-0170**

Upon request viton seals and stainless steel sleeves (only NC versions)

NC

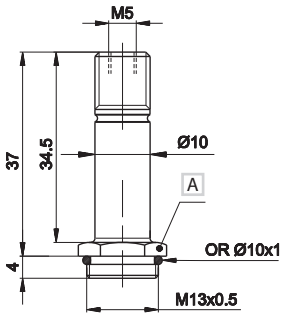

NO

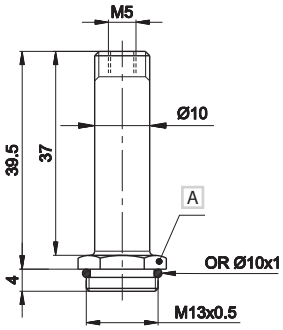

A Wrench 14

Detail of machining

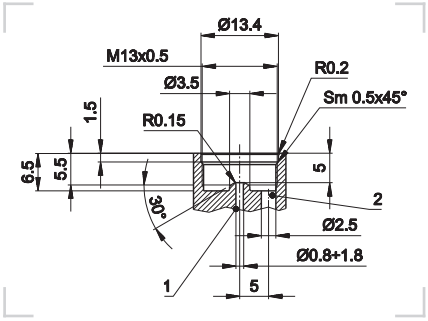

1 = Supply port
2 = Use

Locking rings for coils on sleeves

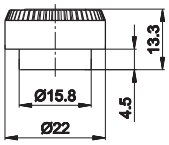

1

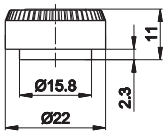

2

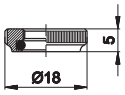

3

Version	Suitable for sleeves	Material	Coil	Part no.
1 = radial exhausts	3/2 NO	technopolymer	U1	**AM-5213A**
2 = radial exhausts	3/2 NC	technopolymer	U1	**AM-5211A**
3 = open exhausts	2/2 NC	brass	U1	**AM-5211B**

In order to convey exhausts, use version 3

Standard manual overrides

Functionig	Suitable for sleeves	Symbol/Part no.
1 = with 2 position screw	all NC U1 electropilots that can use manual override	⊖
2 = with impulse 1-2 position screw	only CNOMO NC U1 electropilots	⊖
3 = with button with tool	only CNOMO NC U1 electropilots	→
4 = with button, 1 position	U1 3/2 NO electropilots	**AM-5201** (a)

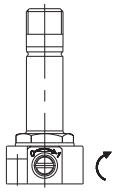

1

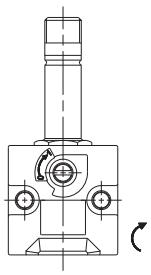

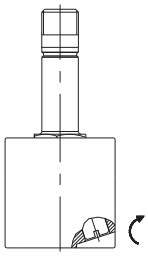

2

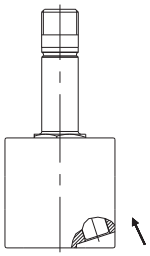

3

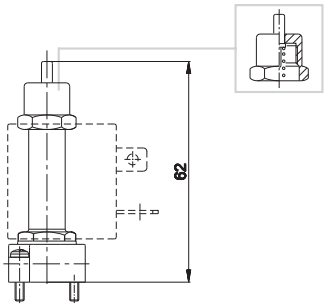

4

(a) = montato sull'estremità del cannotto 3/2 NO

⊖ = with 2 position screw
→ = with button with tool

Subject to change

U1 **2/2 - 3/2** Electropilot for assembling on sub-base

Material:	
valve body	technopolymer
sleeve	treated brass
core and spring	stainless steel
seals	nitrile rubber

	Symbol	Ø (d) mm	Flow rate (Nl/min) 1→2	2→3	Resp. Time (ms) En.	De-en.	Manual override	Weight Kg	Part no.
3/2 NC		1,5	60	80	12	12	⊖	0,027	**AA-0184**
2/2 NC		1,3	50	-	16	-	⊖	0,027	**AA-0186**
3/2 NO (b)		1,2	30	70	11	10	(c)	0,030	**AA-0188**

Use SPEED subbase to build Manifolds, see following pages.
Available upon request: brass valve body (without manual override), zamak valve body, stainless steel sleeve, other inner diameters.

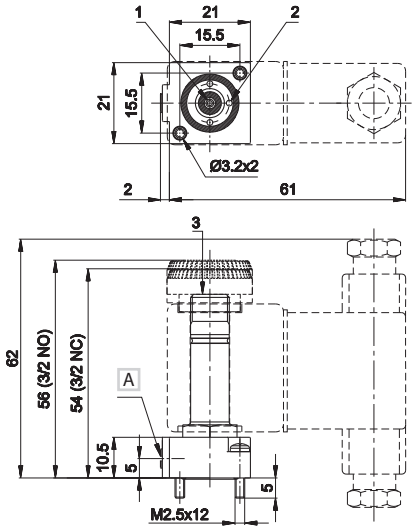

A Manual override

1 = Supply port
2 = Use
3 = Exhaust

U1 **2/2 - 3/2** G1/8 Electropilot

Material:	
valve body	brass
sleeve	treated brass
core and spring	stainless steel
seals	nitrile rubber

	Symbol	Ø (d) mm	Flow rate (Nl/min) 1→2	2→3	Resp. Time (ms) En.	De-en.	Manual override	Weight Kg	Part no.
3/2 NC		1,5	60	85	12	12	-	0,105	**AA-0211**
2/2 NC		1,3	60	-	16	-	-	0,105	**AA-0219**
3/2 NO (b)		1,2	28	75	11	9	(c)	0,105	**AA-0213**

Electropilot to be used alone.
Brass body suitable for intercepting non-aggressive luiquids. No manual override.
Available upon request: stainless steel sleeve - other inner diameters.

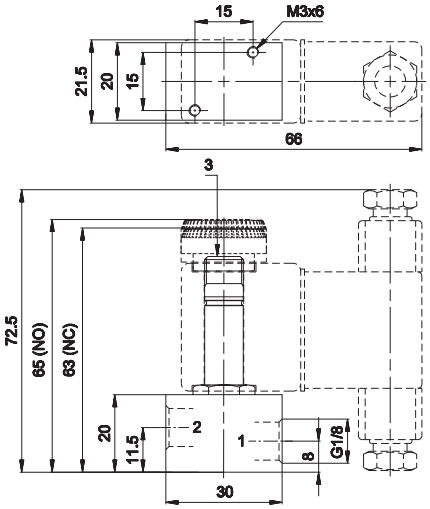

1 = Supply port
2 = Use
3 = Exhaust

U1 **2/2 - 3/2** M5 Electropilot

Material:	
valve body	brass
sleeve	treated brass
core and spring	stainless steel
seals	nitrile rubber

	Symbol	Ø (d) mm	Flow rate (Nl/min) 1→2	2→3	Resp. Time (ms) En.	De-en.	Manual override	Weight Kg	Part no.
3/2 NC		1,5	60	80	12	12	-	0,065	**AA-0231**
2/2 NC		1,3	50	-	16	-	-	0,065	**AA-0239**
3/2 NO (b)		1,2	30	70	11	10	(c)	0,065	**AA-0233**

Electropilot to be used alone.
Brass body suitable for intercepting non-aggressive luiquids. No manual override.
Available upon request: stainless steel sleeve - other inner diameters.

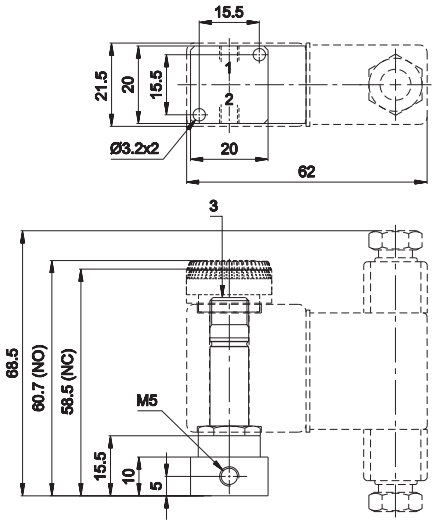

1 = Supply port
2 = Use
3 = Exhaust

(b) = close the exhaust of the 3/2 NO electropilot to get the 2/2 NO one
(c) = manual override on AM-5201 ring nut
⊖ = with 2 position screw
(d) = the Ø shown on the 3/2 valves refers to the exhhaust

Electropilots are supplied without coil and connector

U1 CNOMO **2/2 - 3/2** Electropilot for mounting on sub-bases SPEED U2

Material:	
valve body	technopolymer
sleeve	treated brass
core and spring	stainless steel
seals	nitrile rubber

	Symbol	Ø (d) mm	Flow rate (Nl/min) 1→2	2→3	Resp. Time (ms) En.	De-en.	Manual override	Weight Kg	Part no.
3/2 NC	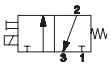	1,5	45	77	12	12	⊖	0,052	**AA-0400**
		1,5	45	77	12	12	→	0,052	**AA-0400U**
2/2 NC	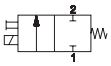	1,3	42	-	18	-	⊖	0,052	**AA-0402**
3/2 NO (b)	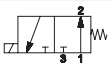	1,2	33	77	11	10	(c)	0,060	**AA-0404**

Available upon request: zamak valve body, stainless steel sleeve, other inner diameters.

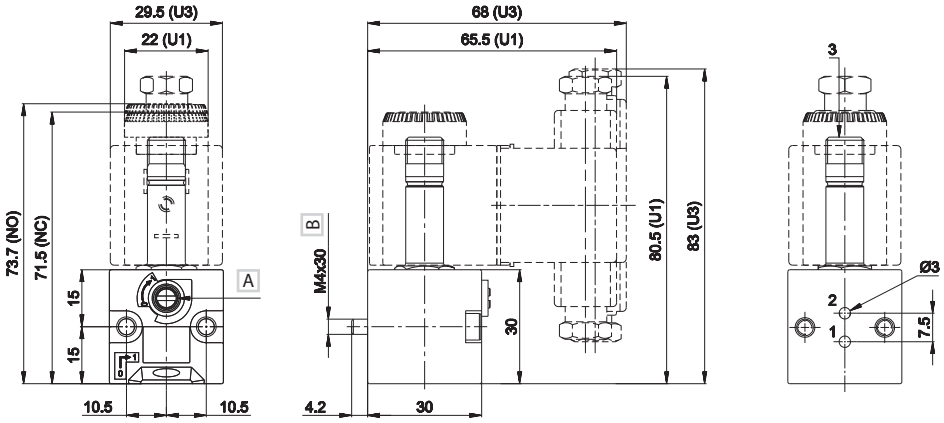

A Manual override
B ISO 4762

1 = Supply port
2 = Use
3 = Exhaust

Modular sub-base "SPEED" series U1/U2 **G1/8**

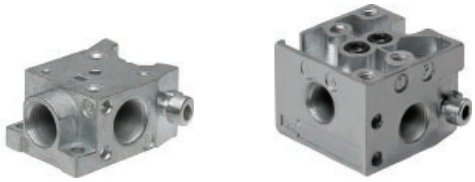

Electropilot	Connections	Material	Weight Kg	Part no.
U1 sub-base	G 1/8	zamak	0,037	**AA-0450**
CNOMO sub-base	G 1/8	zamak	0,075	**AB-0900**

Advantages
The original UNIVER "Speed" series was designed to solve some operational problems

- Possibility of defining the number of sub-bases at the moment of use
- Possibility of freely increasing or reducing the number of elements
- Quick assembly with special screw (built-in) standard supplied
- Reduction of stock holding
- Easy technical intervention

Air supply is rotated by 90° in comparison with side consumption
Standard (built-in) screw and O-Ring

When assembling the manifold, put the bases on a flat surface and tighten the screw until the manifold is perfectly aligned.

U1

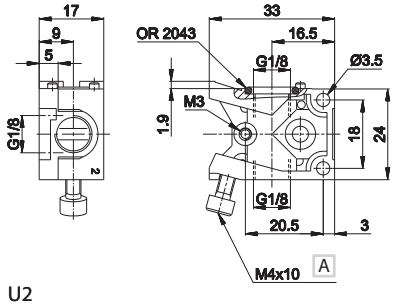

U2

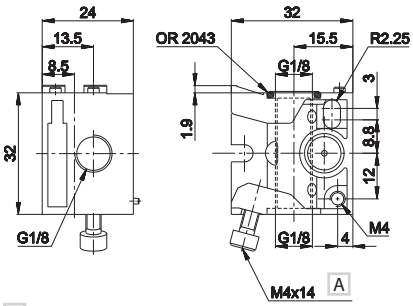

A ISO 4762

(b) = close the exhaust of the 3/2 NO electropilot to get the 2/2 NO one
(d) = the Ø shown on the 3/2 valves refers to the exhhaust
Electropilots are supplied without coil and connector

(c) = manual override on ring nut AM-5201

⊖ = with 2 position screw
→ = with button with tool

Subject to change

U1 **G1/8** sub-base

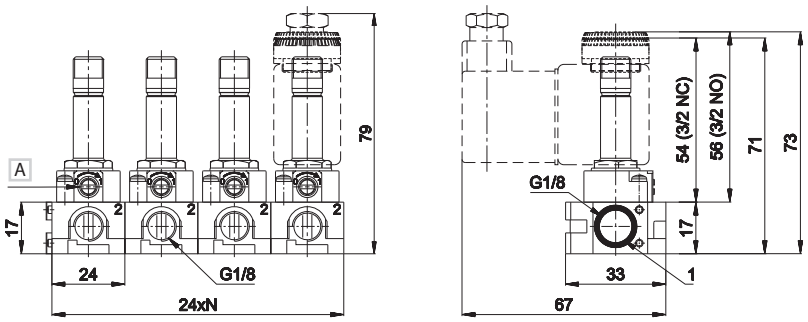

A Manual override

1 = Supply port
2 = Use

N = Number of valve positions

U1 **G1/8 CNOMO** sub-base

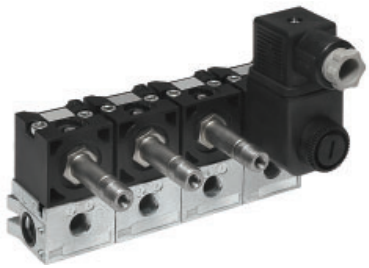

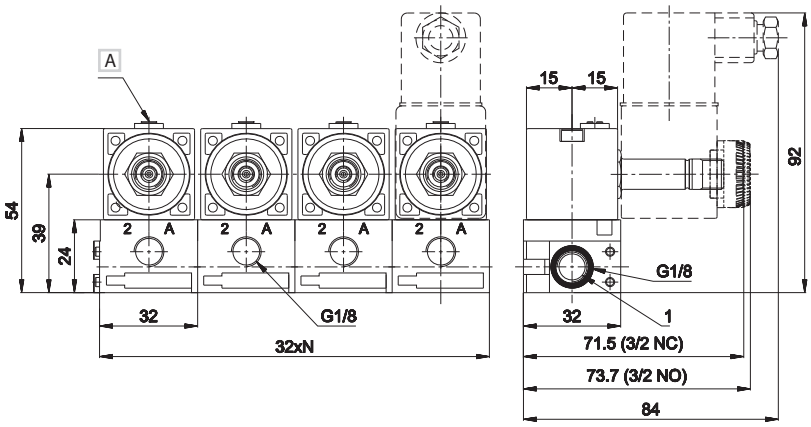

A Manual override

1 = Supply port
2 - A = Use

N = Number of valve positions

3
VALVES

AB

Miniature electropilots U2

Direct intervention electropilots with poppet valve system and bottom cushioned seals
- Assembly on sub-base
- Threaded connections on the body
- CNOMO interface
- Orientable coil (360°) separated from mechanical part
- Versions: 2/2 3/2 - NC NO
- Original Univer SPEED modular sub-base

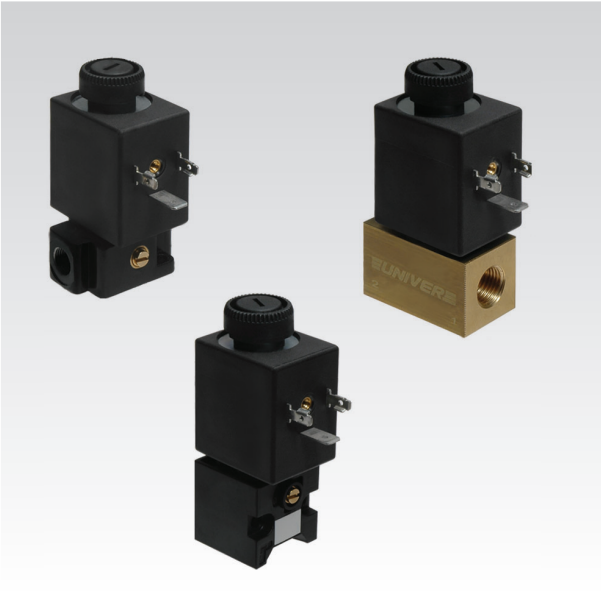

ATEX version available upon request

CE Ex II 3 GD c nA II T5-10°C ≤ Ta ≤ 45°C

TECHNICAL CHARACTERISTICS

Ambient temperature				-10 ÷ +50 °C
Fluid temperature				Max +95 °C
Fluid				10 µm filtered air, with or without lubrication; neutral gases
				(versions for different fluids available upon request)
Commutation system				direct intervention poppet with cushioned seals
Ways/Positions				**2/2 NC, 3/2 NC, 3/2 NO**[(a)]
Pressure				**2/2, 3/2 NC** = 0 ÷ 10 bar
				3/2 NO = 3 ÷ 10 bar
Control				electric
Return				mechanical spring
Connections				on sub-base / threaded on the body
	sub-base	**G 1/8**	**G 1/4**	**CNOMO**
Nominal Ø (mm)	2,1 ÷ 2,4	2,1 ÷ 2,4	1,6 ÷ 6	2,1 ÷ 2,4
Nominal flow rate (Nl/min)	92 ÷ 150	100 ÷ 155	95 ÷ 650	92 ÷ 110

CONSTRUCTIVE CHARACTERISTICS

Materials	see features below

ELECTRIC CHARACTERISTICS

Series	U2
Coil	DB
Power consumption	11W (DC) - 10 VA (AC)
Connector	AM 5111
Voltage	12 V DC - 24 V DC - 24 V AC - 110 V AC - 230 V AC
Protection degree	IP65

For other electric features see section **"Accessories>Coils"**

C US

For electropilots in compliance with CSA/UL certification see the related section "Omologated electropilots"

(a) = Mechanical part designed to keep the air supply always from the body
(Useful in case of assembly of more NC-NO pilots in series to have a unique supply port)

U2 Sleeves - with moving core

Material:	
sleeve	treated brass
cores and springs	stainless steel
seals	nitrile rubber

	Exhaust Ø mm	Pressure bar	Weight Kg	Part no.
3/2 NO	2,4	3÷10	0,06	**AB-0600**
3/2 NC	2,4	0÷10	0,05	**AB-0613**
2/2 NC	-	0÷10	0,06	**AB-0640**
2/2 NC (a)	-	0÷10	0,06	**AB-0643**

Upon request viton seals and stainless steel sleeves (only NC options)

NC

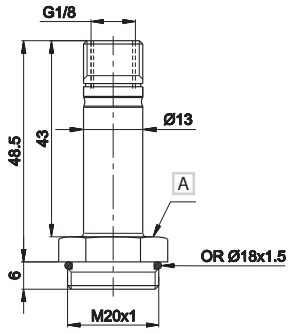

NO

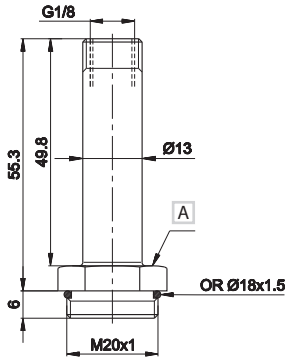

A Wrench 22

Detail of machining

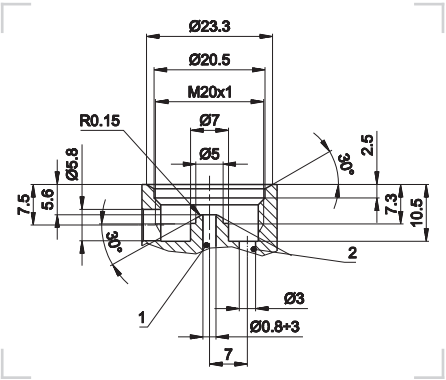

1 = Supply port
2 = Use

3

Locking rings for coils on sleeves

Version	Suitable for sleeves	Material	Coil	Part no.
1 = radial exhausts	3/2 NO	technopolymer	U2	**AM-5214A**
2 = radial exhausts	3/2 NC	technopolymer	U2	**AM-5212A**
3 = open exhausts	2/2 NC	brass	U2	**AM-5212B**

In order to convey exhausts, use version 3

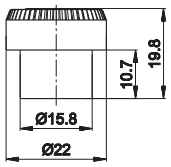

1

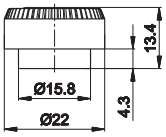

2

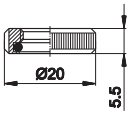

3

Standard manual overrides with electropilots

Functionig	Suitable for sleeves	Symbol/Part no.
1 = with 2 position screw	all NC U2 electropilots that can use manual override	⊖
2 = with impulse 1-2 position screw	only CNOMO NC U2 electropilots	⊖
3 = with button with tool	only CNOMO NC U2 electropilots	→
4 = with button, 1 position	U2 NO 3/2 electropilots	**AM-5203**(b)

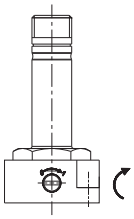

1

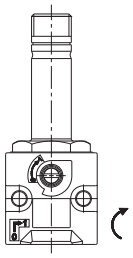

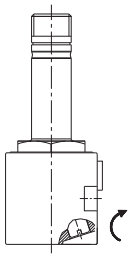

2

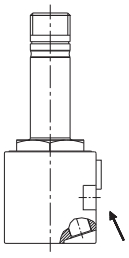

3

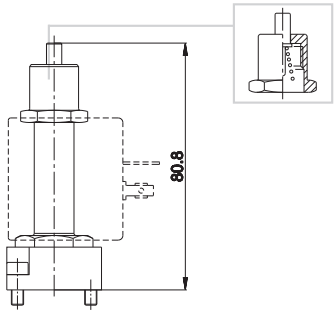

4

(a) = Suitable for sub-bases with diameter from 3 ÷ 6

(b) = Mounted on the 3/2 NO sleeve

⊖ = with 2 position screw
→ = with button with tool

Subject to change

U2 **2/2 - 3/2** Electropilot for assembling on sub-base

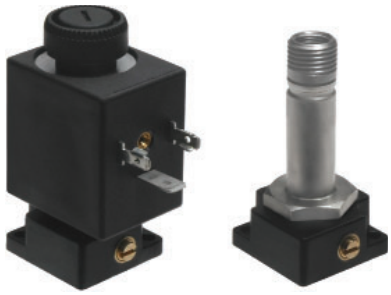

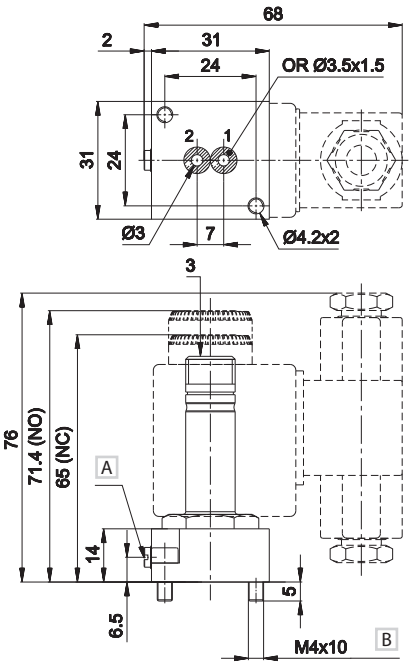

Material:	
valve body	zamak
sleeve	treated brass
core and spring	stainless steel
seals	nitrile rubber

	Symbol	Ø (d) mm	Flow rate (Nl/min) 1→2	2→3	Resp. Time (ms) En.	De-en.	Manual override	Weight Kg	Part no.
3/2 NC	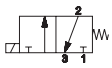	2,4	150	160	13	10	-	0,12	**AB-0681**
3/2 NC	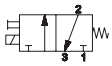	2,4	150	160	13	10	⊖	0,12	**AB-0687**
2/2 NC	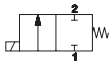	2,1	130	-	13	-	-	0,12	**AB-0722**
2/2 NC	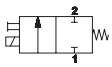	2,1	130	-	13	-	⊖	0,12	**AB-0728**
3/2 NO (c)	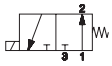	2,4	92	148	14	10	(e)	0,13	**AB-0685**

Sub-base: SPEED U2. Available upon request: stainless steel sleeve - other inner diameters.

A Manual override
B ISO 4762

1 = Supply port
2 = Use
3 = Exhaust

U2 **2/2 - 3/2** G1/8 Electropilot

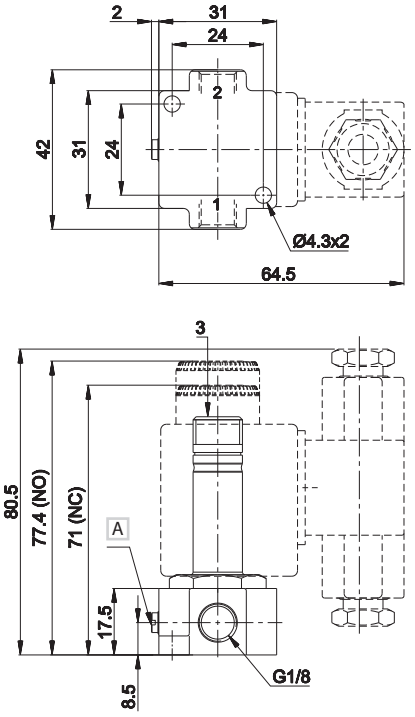

Material:	
valve body	zamak
sleeve	treated brass
core and spring	stainless steel
seals	nitrile rubber

	Symbol	Ø (d) mm	Flow rate (Nl/min) 1→2	2→3	Resp. Time (ms) En.	De-en.	Manual override	Weight Kg	Part no.
3/2 NC	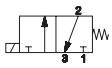	2,4	155	210	13	10	-	0,14	**AB-0751**
3/2 NC	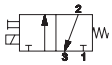	2,4	155	210	13	10	⊖	0,14	**AB-0757**
2/2 NC	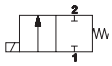	2,1	155	-	12	-	-	0,14	**AB-0765**
2/2 NC	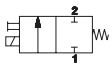	2,1	155	-	12	-	⊖	0,14	**AB-0771**
3/2 NO (c)	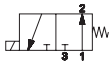	2,4	100	150	14	14	(e)	0,15	**AB-0755**

Available upon request: stainless steel sleeve - other inner diameters.

A Manual override

1 = Supply port
2 = Use
3 = Exhaust

(c) = close the exhaust of the 3/2 NO electropilot to get the 2/2 NO one (d) = the Ø shown on the 3/2 valves refers to the exhhaust ⊖ = with 2 position screw
(e) = manual override on ring nut AM-5203

Electropiltots are supplied without coil and connector

U2 **3/2** G1/4 Electropilot

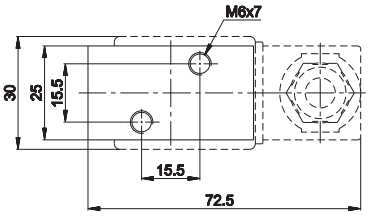

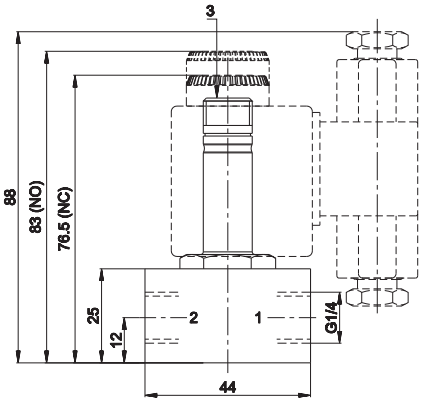

Material:	
valve body	brass
sleeve	treated brass
core and spring	stainless steel
seals	nitrile rubber

	Symbol	Ø (d) mm	Flow rate (Nl/min) 1→2	2→3	Resp. Time (ms) En.	De-en.	Manual override	Weight Kg	Part no.
3/2 NC	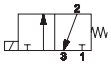	2,1	200	210	13	11	-	0,22	**AB-0822**
3/2 NO (c)	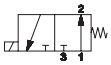	2,1	95	160	12	10	(e)	0,23	**AB-0819**

Suitable for intercepting non-aggressive liquids. Upon request: stainless steel body and sleeve.

1 = Supply port
2 = Use
3 = Exhaust

U2 **2/2** G1/4 Electropilot

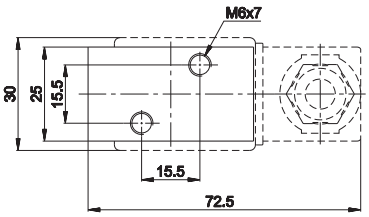

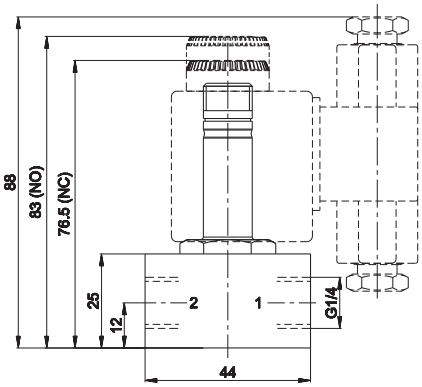

Material:	
valve body	brass
sleeve	treated brass
core and spring	stainless steel
seals	nitrile rubber

	Symbol	Ø (d) mm	Flow rate (Nl/min)	Pressure bar	Resp. Time (ms) En.	De-en.	Weight Kg	Part no.
2/2 NC	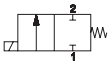	1,6	108	0÷30	6	-	0,23	**AB-0824**
		2	165	0÷20	9	-	0,23	**AB-0825**
		2,4	210	0÷15	11	-	0,23	**AB-0826**
		3	280	0÷10	12	-	0,23	**AB-0827**
		3,5	350	0÷9	-	10	0,23	**AB-0828**
		4	450	0÷8	-	13	0,23	**AB-0829**
		4,5	500	0÷7	-	13	0,23	**AB-0830**
		5	550	0÷6,5	-	16	0,23	**AB-0831**
		5,5	600	0÷6	-	21	0,23	**AB-0832**
		6	650	0÷5	-	29	0,23	**AB-0833**

Suitable for intercepting non-aggressive liquids.

1 = Supply port
2 = Use

Coil U2 - 17 VA	Voltage 24V AC - 50/60 Hz **DB-0607** 110V AC - 50/60 Hz **DB-0608** 220V AC - 50/60 Hz **DB-0610**

(c) = close the exhaust of the 3/2 NO electropilot to get the 2/2 NO one. (d) = the Ø shown on the 3/2 valves refers to the exhhaust. ⊖ = with 2 position screw.
(e) = manual override on AM-5203 ring nut

Electropiltots are supplied without coil and connector

U2 CNOMO **2/2 - 3/2** Electropilot for mounting on sub-bases SPEED U2

Material:	
valve body	technopolymer
sleeve	treated brass
core and spring	stainless steel
seals	nitrile rubber

	Symbol	Ø (d)	Flow rate (Nl/min)		Resp. Time (ms)		Manual	Weight	Part no.
		mm	1→2	2→3	En.	De-en.	override	Kg	
3/2 NC	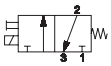	2,4	110	170	13	12	⊖	0,08	**AB-0885**
2/2 NC	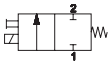	2,1	115	-	12	-	⊖	0,08	**AB-0886**
3/2 NO (c)	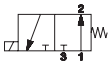	2,4	92	148	13	10	(e)	0,09	**AB-0888**

Available upon request: zamak valve body, stainless steel sleeve, other inner diameters.

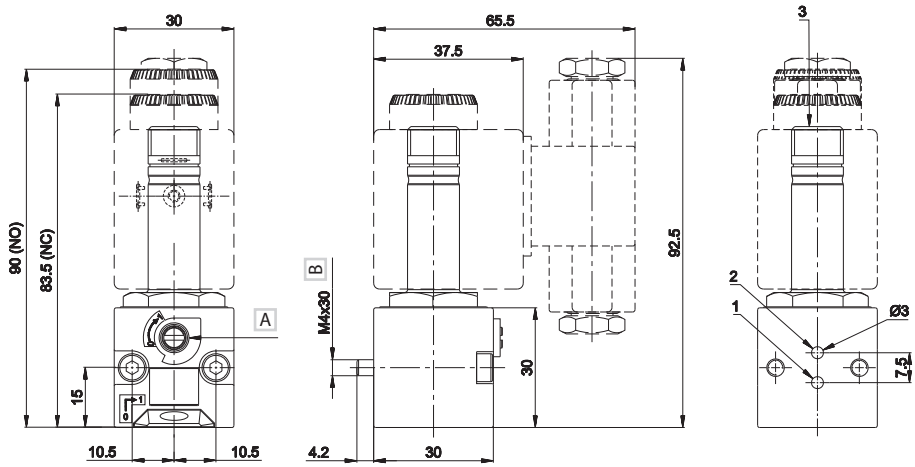

A Override manual
B ISO 4762

1 = Supply port
2 = Use
3 = Exhausts

Modular sub-base SPEED series U2 G1/8

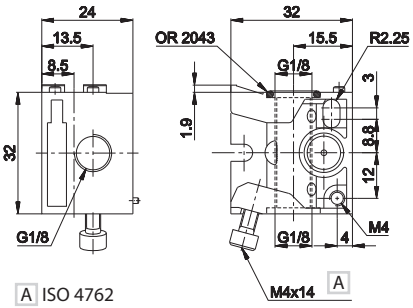

A ISO 4762

Electropilot	Connections	Material	Weight	Part no.
			kg	
U2 for base	G 1/8	zamak	0,075	**AB-0900**

Advantages
The original UNIVER "Speed" series was realized to solve some operational problems

- Possibility of defining the number of sube-bases at the moment of use
- Possibility of freely increasing or reducing the number of elements
- Quick assembly with special screw (built-in) standard supplied
- Reduction of stock holding
- Easy technical intervention

Air supply is rotated by 90° in comparison with side consumption
Standard (built-in) screw and O-Ring

When assembling the manifold, put the bases on a flat surface and tighten the screw until the manifold is perfectly aligned.

(c) = close the exhaust of the 3/2 NO electropilot to get the 2/2 NO one (d) = the Ø shown on the 3/2 valves refers to the exhhaust ⊖ = with 2 position screw
(e) = manual override on ring nut AM-5203

Electropiltots are supplied without coil and connector

U2 **G1/8** Sub-base

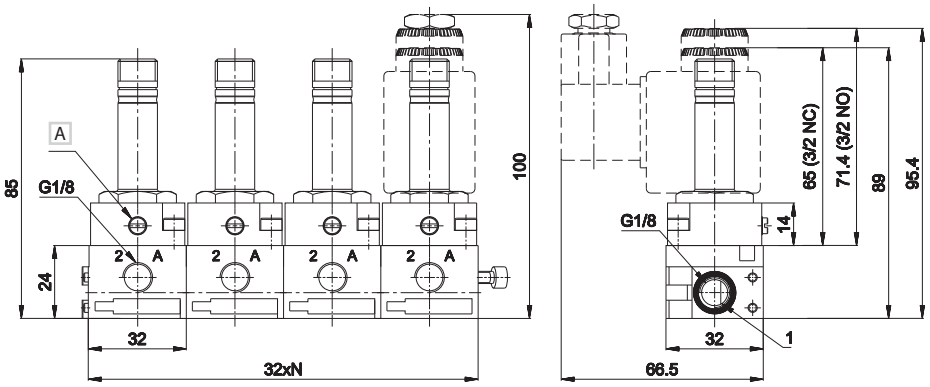

A Manual override

1 = Supply port
2 - A = Use

N = Number of valve position

U2 **G1/8 CNOMO** Sub-base

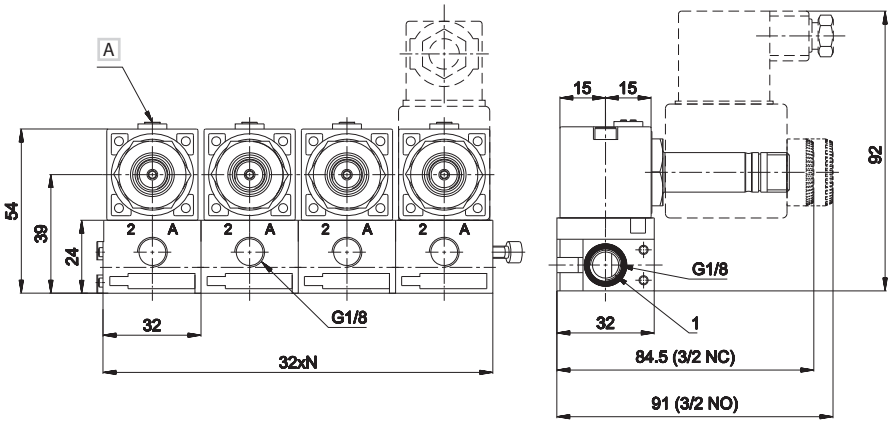

A Manual override

1 = Supply port
2 - A = Use

N = Number of valve position

3

Subject to change

BE/BE12

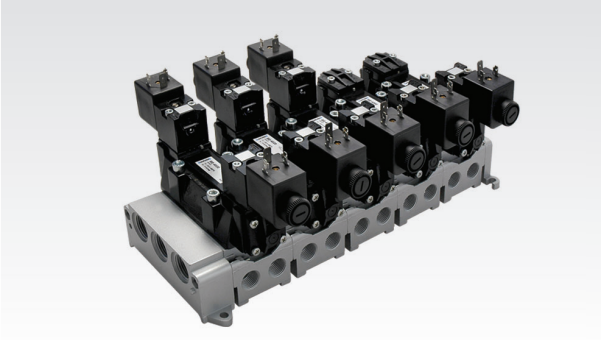

ISO 5599/1 Valves

- Complying with ISO 5599/1 international standards
- Full range: 1 - 2 - 3 - 4 size
- Two different internal commutation systems: mixed and spool
- High capacity
- Short internal stroke
- No lubrication
- Electric connection M12 for Automotive sector (1 - 2 - 3 sizes)
- Modular and single bases
- Possibility of combination of different sub-base sizes with proper interfaces

Available ATEX version upon request

II 2Gc IIC T5 II 2Dc T100°C

TECHNICAL CHARACTERISTICS

Ambient temperature	-10 ÷ +50 °C
Fluid temperature	Max +50 °C
Fluid	50 µm filtered air (mixed system)
	50 µm filtered air, with or without lubrication (spool system)
Commutation system	mixed system, spool system
Ways/Positions	**5/2, 5/3**
Pressure	10 bar Max
Control	indirect electro-pneumatic, pneumatic
Return	mechanical spring, pneumomechanical spring, pneumatic, electric
Connections	ISO 5599/1 interface

	size 1	size 2	size 3	size 4
Nominal Ø (mm)	8	10	15	19
Nominal flow rate (Nl/min)	1480	2300	4200	6600

CONSTRUCTIVE CHARACTERISTICS

Valve body	acetalic resin
Cover	aluminium
Seals	**mixed system:** nitrile rubber and polyurethane
	spool system: nitrile rubber
Sub-base	zamak - aluminium
Actuators	technopolymer
Spool	aluminium

ELECTRIC CHARACTERISTICS

Electropilot	AA series
Coil	U3
Power consumption	2,5 W (DC) - 5 VA (AC)
Voltage	12 V DC - 24 V DC - 24 V AC - 110 V AC - 230 V AC
Connector	AM 5111
Manual override	impulse screw - 2 positions, button with tool (BE)
	recessed button - 1 position (BE12)

MIXED
for heavy applications

SPOOL
for all applications

Flow rate characteristics

>> ISO 1

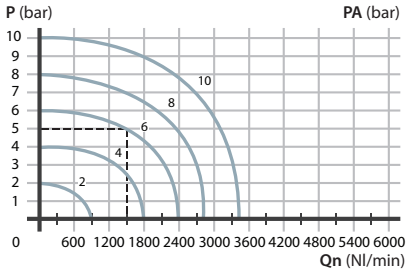

>> ISO 2

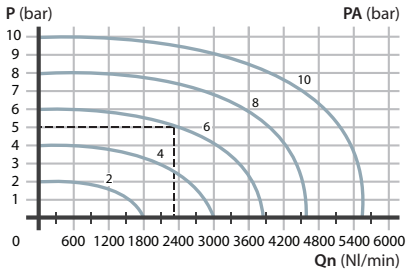

>> ISO 3

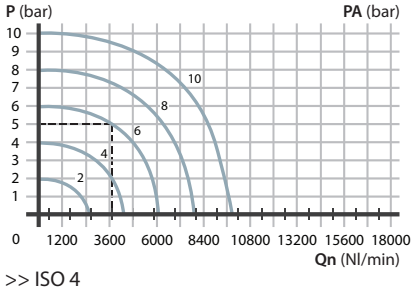

>> ISO 4

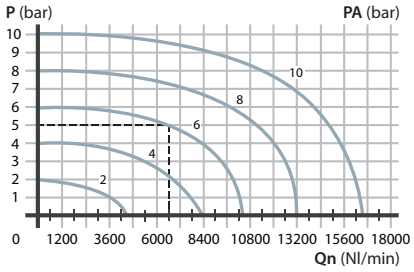

P = Working pressure
PA = Supply pressure
Qn = Nominal flow rate

ISO 5599/1 Standard

The ISO standard for pneumatic valves is accepted by industry and by the majority of the main important pneumatic valve manufactures throughout the world. The choice of valves according to ISO standard guarantees to the user the interchangeability of both the valve body and the electromagnetic part.

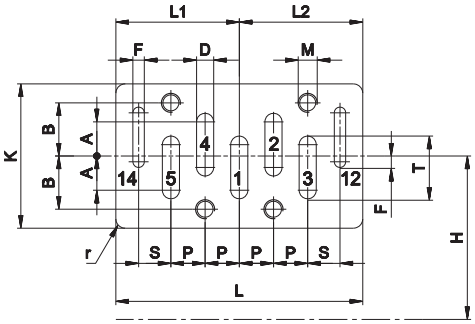

	A	B	D	F	H	K	L	L1	L2	M	P	r	S	T
ISO 1	9	14	4,5	3	43	38	65	32,5	32,5	M5	9	2,5	8,5	16,5
ISO 2	10	19	7	3	56	50	81	40,5	40,5	M6	12	3	10	22
ISO 3	11,5	24	10	4	71	64	106	53	53	M8	16	4	13	29
ISO 4	14,5	29	13	4	82	74	142	77,5	64,5	M8	20	4	15,5	36,5

ISO Standard 5599/1 fixes the dimensions of the bearing surface of the valve and provides accomodation between two contiguous planes while guaranteeing, at the time of replacement, that any suitable valve can be inserted in the manifold assembly. It also provides a clear numbering system for the ports. Main connecting ports:

1 = Supply port 3 - 5 = Exhaust
2 - 4 = Use 12 - 14 = Pilots
(e.g. single electrical impulse solenoid mounted side 14 single pneumatic impulse control at 14)

3

Standard manual overrides

Functioning	Suitable for valve	Symbol/Part no.
1 = with 2 position screw	BE	⊖
2 = with button with tool	BE	→
3 = with recessed button, 1 position	BE12	→

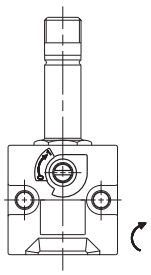

1

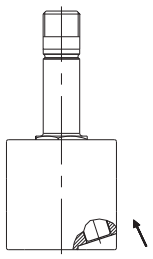

2

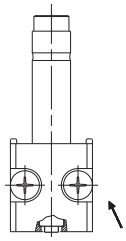

3

Single/double pneumatic impulse

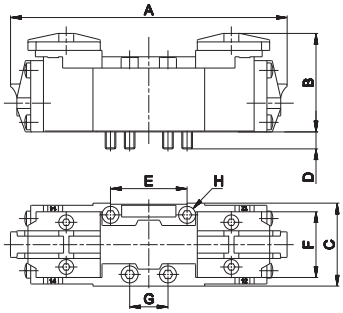

	ISO 1	ISO 2	ISO 3	ISO 4
A	128	145	191	222
B	47	47	63	63
C	39	52	64	74
D	5	5	10	10
E	36	48	64	80
F	28	38	48	58
G	18	24	32	40
H	M5x38	M6x35	M8x50	M8x50

	Symbol	Control 14	Return 12	Size	Pressure bar	Response Time (ms) En.	Response Time (ms) De-en.	Weight Kg	Part no.
	MIXED SYSTEM								
5/2	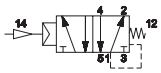	pneumatic amplified	pneumomechanical spring	1	2÷10	9	18	0,30	**BE-3100**
				2	2,3÷10	11	14	0,40	**BE-4100**
				3	2,5÷10	19	49	0,65	**BE-5100**
				4	3÷10	23	46	0,87	**BE-6100**
5/2	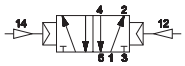	pneumatic amplified	pneumatic amplified	1	1÷10	5	5	0,30	**BE-3150**
				2	1÷10	6	6	0,40	**BE-4150**
				3	1÷10	10	10	0,65	**BE-5150**
				4	1,3÷10	12	12	0,87	**BE-6150**
5/2	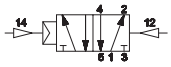	pneumatic amplified	pneumatic not amplified	1	2÷10	5	16	0,30	**BE-3170**
				2	2÷10	6	13	0,40	**BE-4170**
				3	2,2÷10	10	35	0,65	**BE-5170**
				4	2,2÷10	12	32	0,87	**BE-6170**
	SPOOL SYSTEM								
5/2	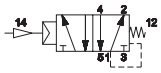	pneumatic amplified	pneumomechanical spring	1	1,8÷10	11	22	0,30	**BE-3800**
				2	2÷10	13	19	0,40	**BE-4800**
				3	2,2÷10	21	52	0,65	**BE-5800**
				4	2,8÷10	24	29	0,87	**BE-6800**
5/2	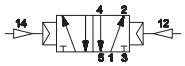	pneumatic amplified	pneumatic amplified	1	0,8÷10	6	6	0,30	**BE-3850**
				2	1÷10	7	7	0,40	**BE-4850**
				3	1÷10	12	12	0,65	**BE-5850**
				4	1÷10	14	14	0,87	**BE-6850**
5/2	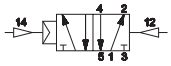	pneumatic amplified	pneumatic not amplified	1	1,5÷10	6	15	0,30	**BE-3870**
				2	1,8÷10	7	14	0,40	**BE-4870**
				3	2÷10	12	38	0,65	**BE-5870**
				4	2÷10	14	31	0,87	**BE-6870**

Single electric impulse

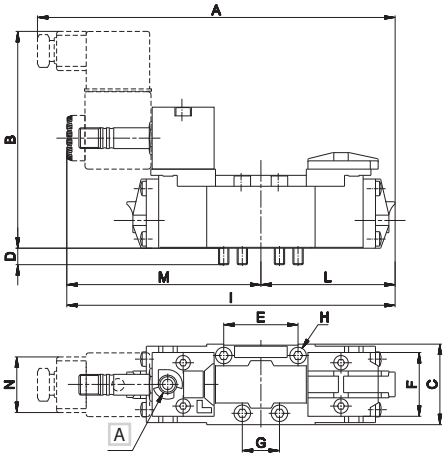

	ISO 1	ISO 2	ISO 3	ISO 4
A	169,5	195,5	219	253
B	105	105	118	118
C	39	52	64	74
D	5	5	10	10
E	36	48	64	80
F	28	38	48	58
G	18	24	32	40
H	M5x38	M6x35	M8x50	M8x50
I	159,5	176	208,5	235
L	64	72,5	95,5	111
M	95,5	103,5	113	124
N	30	30	30	30

A Manual override

	Symbol	Control 14	Return 12	Size	Pressure bar	Response Time (ms) En.	Response Time (ms) De-en.	Weight Kg	Part no.
	MIXED SYSTEM								
5/2	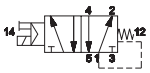	electric amplified	pneumomechanical spring	1	2÷10	20	32	0,37	**BE-3000**
				2	2,3÷10	24	25	0,47	**BE-4000**
				3	2,5÷10	32	71	0,82	**BE-5000**
				4	3÷10	38	62	1,04	**BE-6000**
5/2	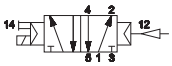	electric amplified	pneumatic amplified	1	1÷10	16	6	0,37	**BE-3060**
				2	1÷10	17	7	0,47	**BE-4060**
				3	1÷10	23	15	0,82	**BE-5060**
				4	1,3÷10	25	16	1,04	**BE-6060**
	SPOOL SYSTEM								
5/2	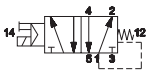	electric amplified	pneumomechanical spring	1	2÷10	21	35	0,37	**BE-3700**
				2	2,2÷10	24	30	0,47	**BE-4700**
				3	2,3÷10	33	74	0,82	**BE-5700**
				4	2,8÷10	39	68	1,04	**BE-6700**
5/2	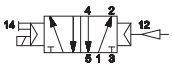	electric amplified	pneumatic amplified	1	1÷10	17	8	0,37	**BE-3760**
				2	1÷10	18	9	0,47	**BE-4760**
				3	1÷10	26	17	0,82	**BE-5760**
				4	1,3÷10	27	18	1,04	**BE-6760**

For manual version with button, add "U" to the end of the part number
Electrovalves are supplied without coil, connector and locking ring

Double electric impulse

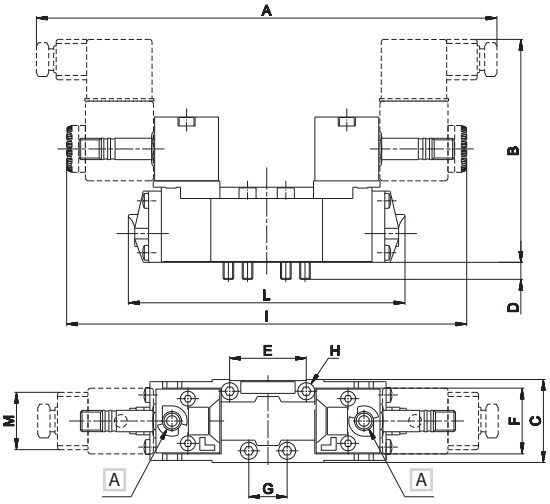

	ISO 1	ISO 2	ISO 3	ISO 4
A	211	226	247	268
B	105	105	118	118
C	39	52	64	74
D	5	5	10	10
E	36	48	64	80
F	28	38	48	58
G	18	24	32	40
H	M5x38	M6x35	M8x50	M8x50
I	191	207	226	248
L	128	145	191	222
M	30	30	30	30

A Manual override

	Symbol	Control 14	Return 12	Size	Pressure bar	Response Time (ms) En.	Response Time (ms) De-en.	Weight Kg	Part no.
	MIXED SYSTEM								
5/2	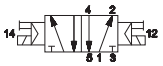	electric amplified	electric amplified	1	1÷10	16	16	0,39	**BE-3020**
				2	1÷10	17	17	0,64	**BE-4020**
				3	1÷10	23	23	1,04	**BE-5020**
				4	1,3÷10	25	25	1,21	**BE-6020**
5/2	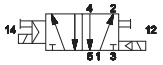	electric amplified	electric non amplified	1	2÷10	16	34	0,39	**BE-3030**
				2	2÷10	17	29	0,64	**BE-4030**
				3	2,2÷10	23	54	1,04	**BE-5030**
				4	2,2÷10	25	45	1,21	**BE-6030**
5/3 o.c.	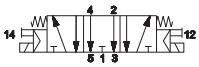	electric amplified	electric amplified	1	3÷10	50	26	0,39	**BE-3200**
				2	3÷10	54	24	0,64	**BE-4200**
				3	3÷10	108	36	1,04	**BE-5200**
				4	3÷10	115	115	1,21	**BE-6200**
5/3 p.c.	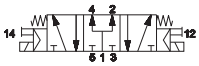	electric amplified	electric amplified	1	2÷10	50	26	0,39	**BE-3205**
				2	2,3÷10	54	24	0,64	**BE-4205**
				3	2,5÷10	108	36	1,04	**BE-5205**
				4	3÷10	115	115	1,21	**BE-6205**
	SPOOL SYSTEM								
5/2	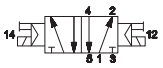	electric amplified	electric amplified	1	1÷10	17	17	0,39	**BE-3720**
				2	1÷10	18	18	0,64	**BE-4720**
				3	1÷10	26	26	1,04	**BE-5720**
				4	1÷10	27	27	1,21	**BE-6720**
5/2	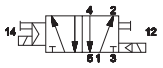	electric amplified	electric non amplified	1	1,8÷10	17	28	0,39	**BE-3730**
				2	1,8÷10	18	25	0,64	**BE-4730**
				3	2,5÷10	26	46	1,04	**BE-5730**
				4	2,5÷10	27	42	1,21	**BE-6730**
5/3 o.c.	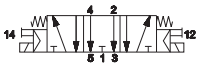	electric amplified	electric amplified	1	2,3÷10	17	25	0,39	**BE-3900**
				2	2,5÷10	18	27	0,64	**BE-4900**
				3	2,5÷10	26	50	1,04	**BE-5900**
				4	2,5÷10	30	47	1,21	**BE-6900**
5/3 c.c.	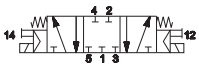	electric amplified	electric amplified	1	2,3÷10	17	25	0,39	**BE-3940**
				2	2,5÷10	18	27	0,64	**BE-4940**
				3	2,5÷10	26	50	1,04	**BE-5940**
				4	2,5÷10	30	47	1,21	**BE-6940**

o.c. = open centres **c.c.** = closed centres **p.c.** = pressurized centres

For manual version with button, add "U" to the end of the part number

Electrovalves are supplied without coil, connector and locking ring

The use of pneumatic component in the automotive field, coupled with electric components, led to the development of a traditional ISO valve with electric connector M12 placed in central position, for both valves with single as well as double electric contol.

Single/double electric impulse

	Symbol	Control	Return	Size	Pressure	Response Time (ms)		Weight	Part no.
		14	12		bar	En.	De-en.	Kg	
	SINGLE IMPULSE - MIXED SYSTEM								
5/2	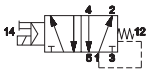	electric amplified	pneumomechanical spring	1	2÷9	18	29	0,45	**BE12-3000**
				2	2,3÷9	23	24	0,55	**BE12-4000**
				3	2,5÷9	35	78	0,90	**BE12-5000**
	SINGLE IMPULSE - SPOOL SYSTEM								
5/2	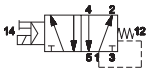	electric amplified	pneumomechanical spring	1	2÷9	19	32	0,45	**BE12-3700**
				2	2,2÷9	23	28	0,55	**BE12-4700**
				3	2,3÷9	36	82	0,90	**BE12-5700**
	DOUBLE IMPULSE - MIXED SYSTEM								
5/2	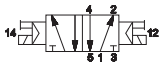	electric amplified	electric amplified	1	1÷9	14	14	0,55	**BE12-3020**
				2	1÷9	16	16	0,80	**BE12-4020**
				3	1÷9	25	25	1,20	**BE12-5020**
5/3 p.c.	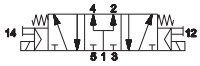	electric amplified	electric amplified	1	2÷9	45	23	0,55	**BE12-3205**
				2	2,3÷9	51	23	0,80	**BE12-4205**
				3	2,5÷9	119	40	1,20	**BE12-5205**
	DOUBLE IMPULSE - SPOOL SYSTEM								
5/2	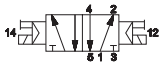	electric amplified	electric amplified	1	1÷9	15	15	0,55	**BE12-3720**
				2	1÷9	17	17	0,80	**BE12-4720**
				3	1÷9	29	29	1,20	**BE12-5720**
5/3 o.c.	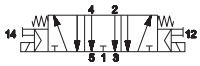	electric amplified	electric amplified	1	2,3÷9	15	22	0,55	**BE12-3900**
				2	2,5÷9	17	26	0,80	**BE12-4900**
				3	2,5÷9	29	55	1,20	**BE12-5900**
5/3 c.c.	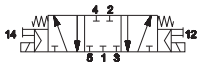	electric amplified	electric amplified	1	2,3÷9	15	22	0,55	**BE12-3940**
				2	2,5÷9	17	26	0,80	**BE12-4940**
				3	2,5÷9	29	55	1,20	**BE12-5940**

o.c. = open centres **c.c.** = closed centres **p.c.** = pressurized centres

Valves are supplied with 24 V DC coil

Single electric impulse

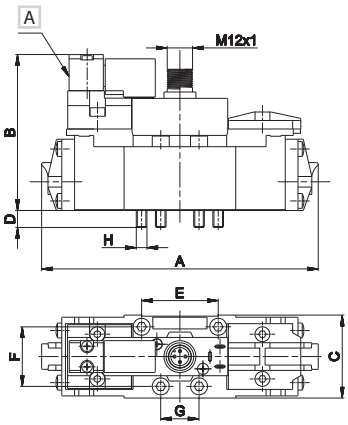

Double electric impulse

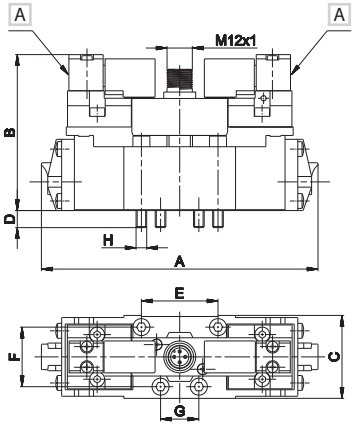

	ISO 1	ISO 2	ISO 3
A	128	145	191
B	73	73	90
C	39	52	64
D	5	5	10
E	36	48	64
F	28	38	48
G	18	24	32
H	M5x38	M6x35	M8x50

A Manual override

ELECTRIC CHARACTERISTICS

- Central electric connector M12x1
- IP 65 protection degree
- 24 V DC voltage
- 2,5 W nominal power
- DD-052** series coil (without faston)
- ED 100%
- LED indicator

Available upon request other voltages max 48 V DC

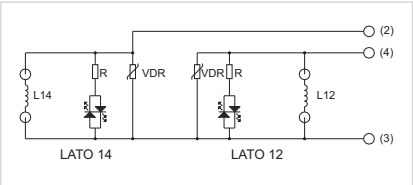

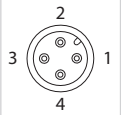

ISO 1 - Single sub-base, side connections

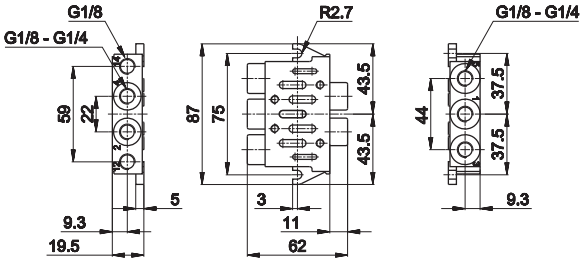

Notes	Connection	Material	Weight	Part no.
			Kg	
in line connections	G1/8	zamak	0,25	**BF-1060**
in line connections	G1/4	zamak	0,25	**BF-1061**

1 = Supply port 3 - 5 = Exhaust
2 - 4 = Use 12 - 14 = Pilots

ISO 2 - Single sub-base, side connections

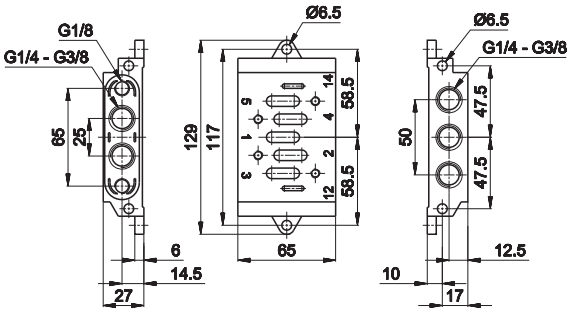

Notes	Connection	Material	Weight	Part no.
			Kg	
in line connections	G1/4	zamak	0,65	**BF-1150**
in line connections	G3/8	zamak	0,65	**BF-1151**

1 = Supply port 3 - 5 = Exhaust
2 - 4 = Use 12 - 14 = Pilots

3

ISO 3 - Single sub-base, side connections

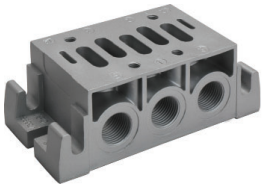

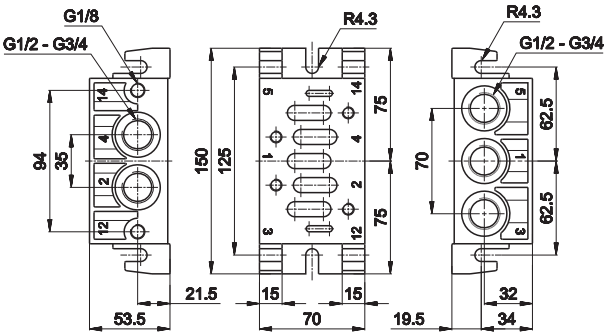

Notes	Connection	Material	Weight	Part no.
			Kg	
in line connections	G1/2	aluminium	0,74	**BF-3060**
in line connections	G3/4	aluminium	0,74	**BF-3061**

1 = Supply port 3 - 5 = Exhaust
2 - 4 = Use 12 - 14 = Pilots

ISO 4 - Single sub-base, side connections

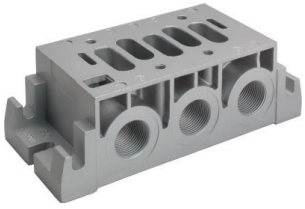

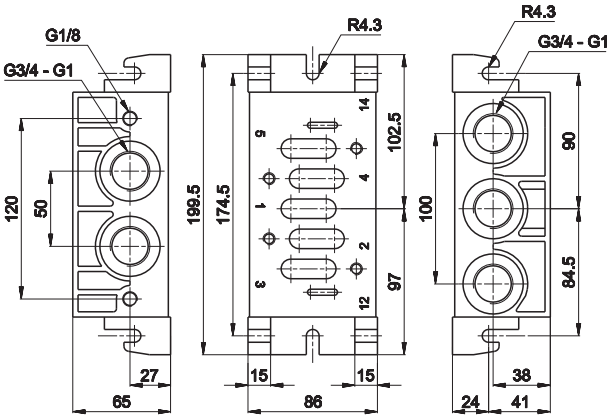

Notes	Connection	Material	Weight	Part no.
			Kg	
in line connections	G3/4	aluminium	1,28	**BF-4060**
dorsal and side connections	G1	aluminium	1,28	**BF-4061**

1 = Supply port 3 - 5 = Exhaust
2 - 4 = Use 12 - 14 = Pilots

Subject to change

ISO 1 - Single modular or Manifold sub-base, dorsal connections, separate exhausts

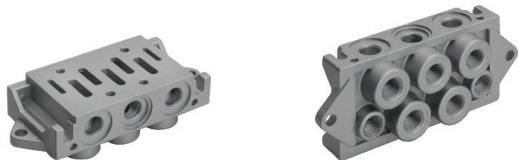

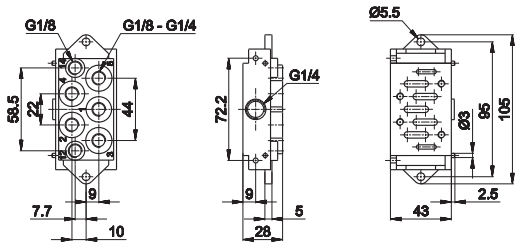

Notes	Connection	Material	Weight	Part no.
			Kg	
dorsal connections	G1/8	zamak	0,35	**BF-1062**
dorsal connections	G1/4	zamak	0,33	**BF-1063**

Single assembly: close side ports (G1/8 - G1/4)
Manifold assembly with common inlet: close dorsal connections n.1
With incorporated screws and seal

1 = Supply port 3 - 5 = Exhaust
2 - 4 = Use 12 - 14 = Pilots

ISO 2 - Single sub-base, dorsal connections

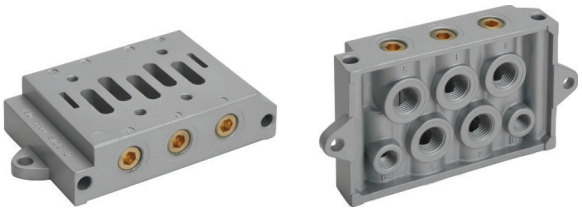

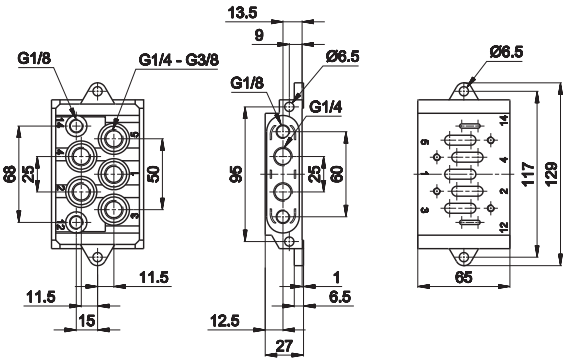

Notes	Connection	Material	Weight	Part no.
			Kg	
dorsal connections	G1/4	zamak	0,65	**BF-1152**
dorsal connections	G3/8	zamak	0,65	**BF-1153**

1 = Supply port 3 - 5 = Exhaust
2 - 4 = Use 12 - 14 = Pilots

ISO 3 - Single sub-base, dorsal connections

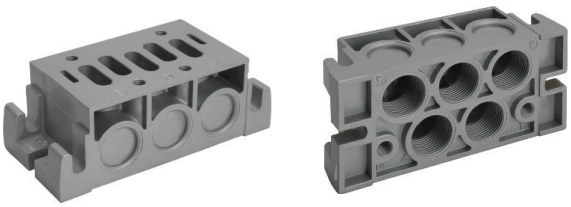

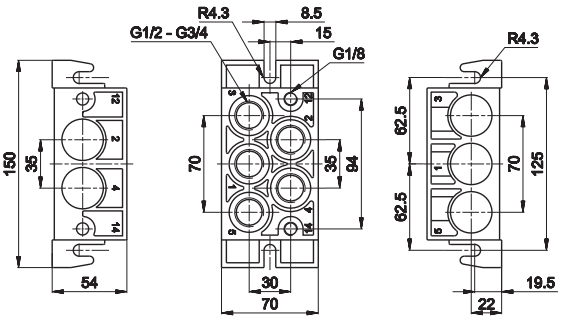

Notes	Connection	Material	Weight	Part no.
			Kg	
dorsal connections	G3/4	aluminium	0,72	**BF-3063**

1 = Supply port 3 - 5 = Exhaust
2 - 4 = Use 12 - 14 = Pilots

ISO 4 - Single sub-base, dorsal connections

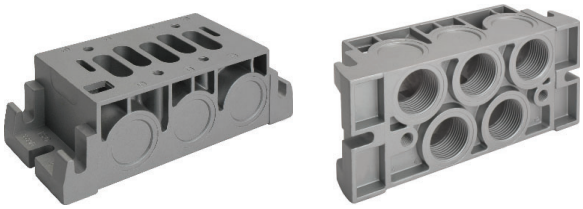

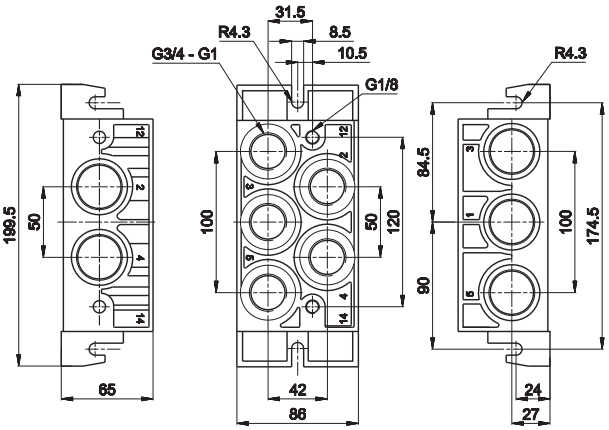

Notes	Connection	Material	Weight	Part no.
			Kg	
dorsal connections	G3/4	aluminium	1,24	**BF-4062**
dorsal connections	G1	aluminium	1,24	**BF-4063**

1 = Supply port 3 - 5 = Exhaust
2 - 4 = Use 12 - 14 = Pilots

ISO 1 - Manifold universal system sub-base, dorsal and side connections, conveyed exhausts

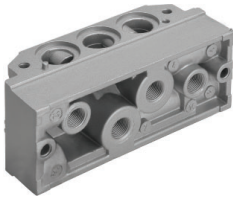

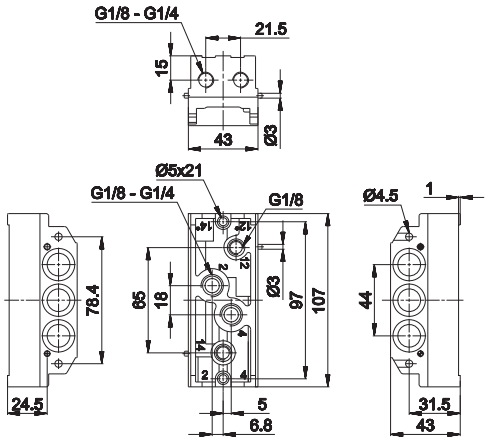

Notes	Connection	Material	Weight	Part no.
			Kg	
dorsal and side connections	G1/8	aluminium	0,28	**BF-1071**
dorsal and side connections	G1/4	aluminium	0,28	**BF-1072**
side pneumatic impulses	G1/8	aluminium	0,30	**BF-1071S**
side pneumatic impulses	G1/4	aluminium	0,30	**BF-1072S**

Dorsal and side connections possible. Close unused ports with caps.
With incorporated screws, seals and caps included

1 = Supply port
2 - 4 = Use
3 - 5 = Exhaust
12 - 14 = Pilots
12* - 14* = Side pilots

ISO 1 - Manifold universal system inlet plate

A On top connections
B In line connections
C Dorsal connetions

Section A-A

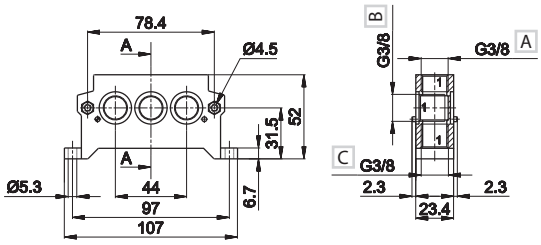

Notes	Connection	Material	Weight	Part no.
			Kg	
on top connections	G3/8	zamak	0,35	**BF-1065**
dorsal connections	G3/8	zamak	0,35	**BF-1066**

1 = Supply port
3 - 5 = Exhaust

D Only in line connections

Section A-A

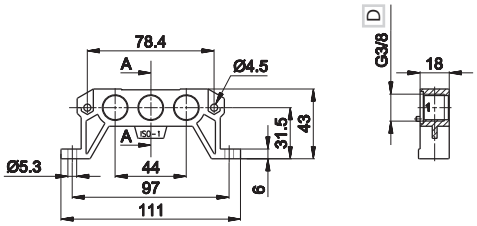

Notes	Connection	Material	Weight	Part no.
			Kg	
only in line connections	G3/8	aluminium	0,12	**BF-1068**

When battery exceeds 4 units, the mounting of 2 plates is recommended
Mixed version available upon request
With incorporated screws and seal

1 = Supply port
3 - 5 = Exhaust

ISO 1 - Manifold universal system diaphragm

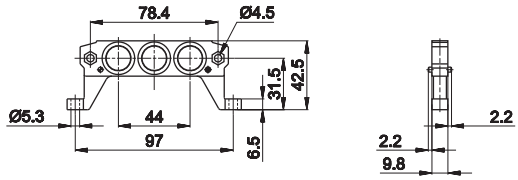

Notes	Connection	Material	Weight	Part no.
			Kg	
-	-	zamak	0,09	**BF-1070**

The diaphragm is not only the end plate of the manifold but it is also coupled with the exhaust regulator to separate two sub-bases and regulate the valves independently. In this case break the central blind hole.
To get two or more pressures, break the two side blind holes.

BF-1085

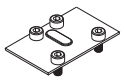

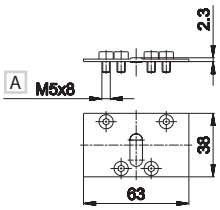

A ISO 4762

ISO 1 - Closing plate for sub-base 1
material: steel
weight: 0,03 Kg (for all sub-base versions)

ISO 2 - Manifold universal system sub-base, dorsal and side connections, conveyed exhausts

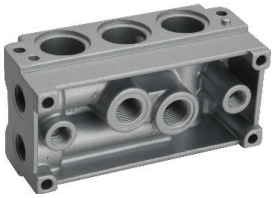

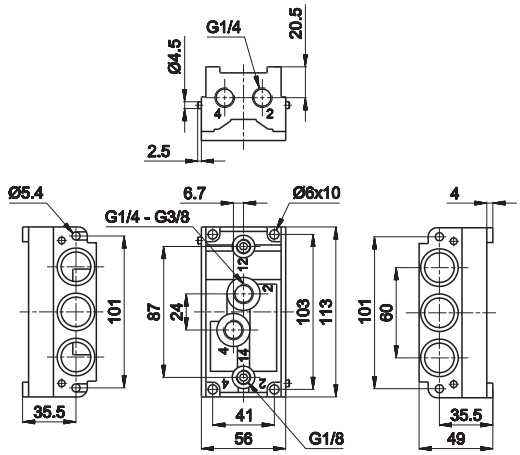

Notes	Connection	Material	Weight	Part no.
			Kg	
dorsal and side connections	G1/4	zamak	0,80	**BF-1160**
dorsal and side connections	G3/8	zamak	0,80	**BF-1161**

Dorsal and side connections possible. Close unused ports with caps.
With incorporated screw, seals and caps included

1 = Supply port 3 - 5 = Exhaust
2 - 4 = Use 12 - 14 = Pilots

ISO 2 - Manifold Universal system inlet plate

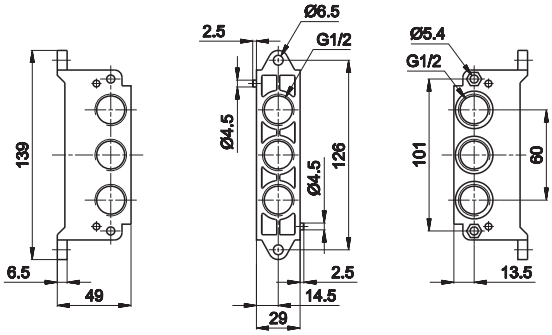

Notes	Connection	Material	Weight	Part no.
			Kg	
in line connections	G1/2	zamak	0,46	**BF-1154**
dorsal connections	G1/2	zamak	0,46	**BF-1155**

When battery exceeds 4 units, the mounting of 2 plates is recommended
Mixed version available upon request
With incorporated screw and seals

ISO 2 - Manifold universal system diaphragm

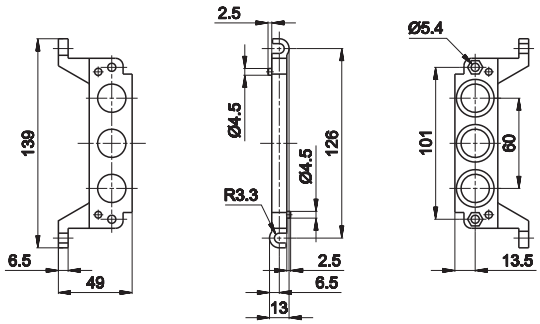

Notes	Connection		Weight	Part no.
			Kg	
-	-	zamak	0,16	**BF-1162**

The diaphragm is not only the end plate of the manifold but it is also coupled with the exhaust regulator to separate two sub-bases and regulate the valves independently. In this case breakthe central blind hole.
To get two or more pressures, break the two side blind holes.

BF-1175

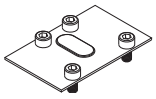

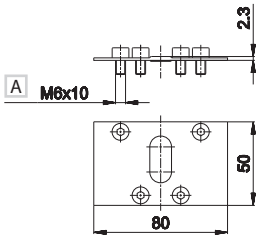

A ISO 4762

ISO 2 - Closing plate for sub-base 2
material: steel
weight: 0,05 Kg (for all sub-base versions)

ISO 3 - Manifold universal system sub-base, dorsal and side connections, conveyed exhausts

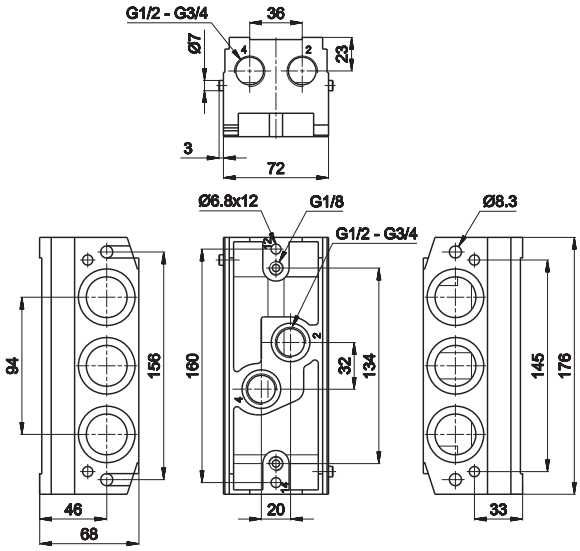

Notes	Connection	Material	Weight	Part no.
			Kg	
dorsal and side connections	G1/2	aluminium	1,10	**BF-3071**
dorsal and side connections	G3/4	aluminium	1,10	**BF-3072**

Dorsal and side connections possible. Close unused ports with caps.
With incorporated screws, seals and caps included

1 = Supply port
2 - 4 = Use
3 - 5 = Exhaust
12 - 14 = Pilots

ISO 3 - Manifold Universal system inlet plate

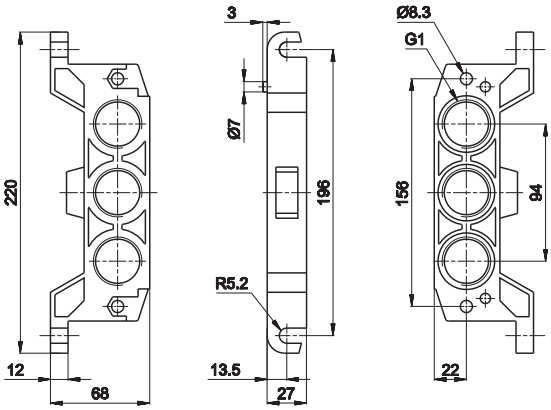

Notes	Connection	Material	Weight	Part no.
			Kg	
in line connections	G1	aluminium	0,44	**BF-3064**

When battery exceeds 4 units, the mounting of 2 plates is recommended
Mixed version available upon request
With incorporated screws and seals

BF-3175

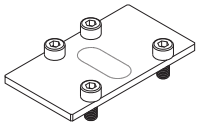

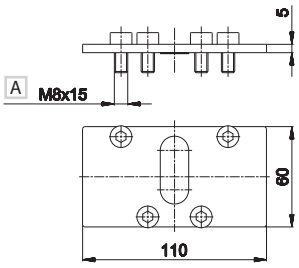

A ISO 4762

ISO 3 - Closing plate for sub-base 3
material: steel
weight: 0,08 Kg (for all sub-base versions)

BF-3082

ISO 3 - Universal system Cap
material: steel
weight: 0,20 Kg
To be used to reach two pressures

Subject to change

BF-1190

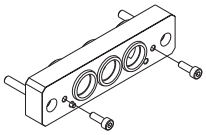

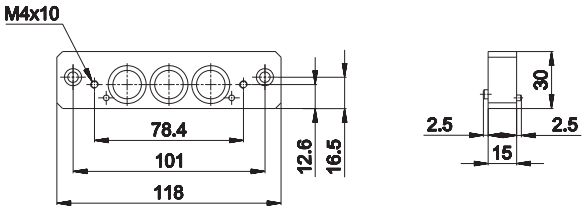

Connecting interface for universal sub-bases size 1 and 2
material: steel
weight: 0,11 Kg
It allows the use of size 1 and 2 valves in one manifold with conveyed pressure and exhausts. (Upon request: pressure and/or exhausts separated)

BF-3190

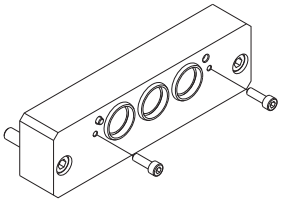

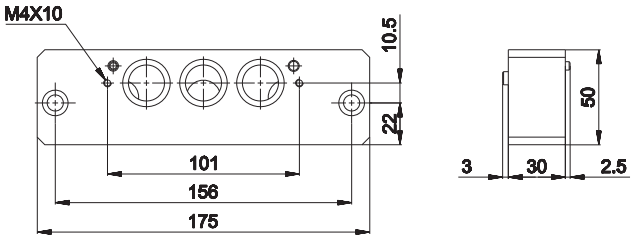

Connecting interface for universal sub-bases size 2 and 3
material: steel
weight: 0,57 Kg
It allows the use of size 2 and 3 valves in one manifold with conveyed pressure and exhausts. (Upon request: pressure and/or exhausts separated)

BF-3191

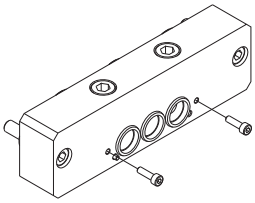

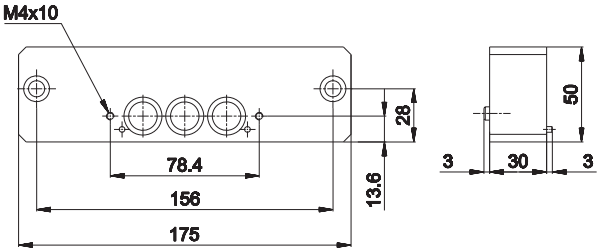

Connecting interface for universal sub-bases size 1 and 3
material: steel
weight: 0,57 Kg
It allows the use of size 1 and 3 valves in one manifold with conveyed pressure and exhausts. (Upon request: pressure and/or exhausts separated)

AE

ISO 5599/1 Light Series Valves

Light series: technopolymer valve body with metall cover
Interchangeability: ISO 5599/1 sub-base mounting (size 1 and 2)
Reliability: the mixed internal system (poppet-spool) has been used and appreciated for decades
Performance: high flow rate (size 1 = 1480 Nl/min - size 2 = 2300 Nl/min), fast commutation, functioning without lubrication

Available ATEX version upon request

CE Ex II 2Gc IIC T5 II 2Dc T100°C

TECHNICAL CHARACTERISTICS

Ambient temperature	-10 ÷ +50 °C	
Fluid temperature	+50 °C Max	
Fluid	50 µm filtered air, with or without lubrication	
Commutation system	mixed system	
Ways/Positions	**5/2**	
Pressure	max 10 bar	
Control	indirect electro - pneumatic and pneumatic	
Return	pneumomechanical spring	
Connections	ISO 5599/1 interface (BF series sub-base)	
	size 1	**size 2**
Nominal Ø (mm)	8	10
Nominal flow rate (Nl/min)	1480	2300

CONSTRUCTIVE CHARACTERISTICS

Valve body	acetalic resin
Seals	nitrile rubber - polyurethane
Spool	alluminium
Cover	zamak

ELECTRIC CHARACTERISTICS

Electropilot	U1 - AA series
Coil	DA series
Power consumption	3,5 W (DC) - 5 VA (AC)
Voltage	12 V DC - 24 V DC - 24 V AC - 110 V AC - 230 V AC
Connector	AM-5110
Manual override	impulse screw - 2 positions

Flow rate characteristics

>> ISO 1

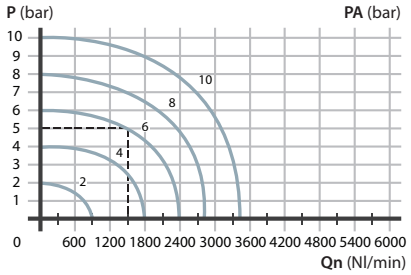

>> ISO 2

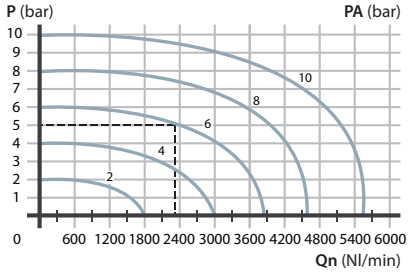

P = Working pressure
PA = Supply pressure
Qn = Nominal flow rate

Single/double pneumatic impulse

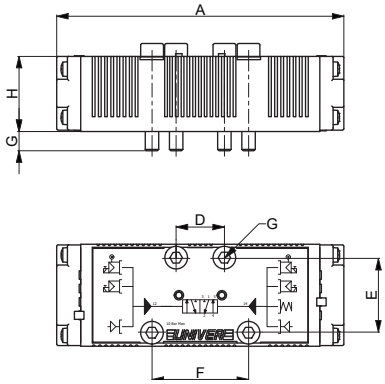

	A	B	C	D	E	F	G	H
size 1	108	38	7	18	28	36	M5x35	28
size 2	120	50	7	24	38	48	M6x35	28

	Symbol	Control 14	Return 12	Size	Pressure bar	Response Time (ms) En.	Response Time (ms) De-en.	Weight Kg	Part no.
5/2	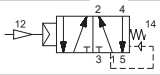	pneumatic amplified	pneumomechanical spring	1 2	2÷10 2,3÷10	5 8	10 10	0,17 0,80	**AE-1009** **AE-1120**
5/2	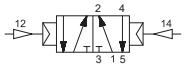	pneumatic amplified	pneumatic amplified	1 2	1÷10 1÷10	3 3	3 3	0,17 0,21	**AE-1010** **AE-1121**

Single electric impulse

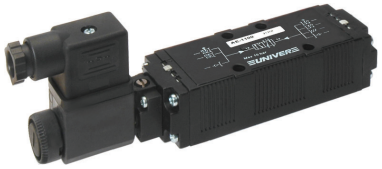

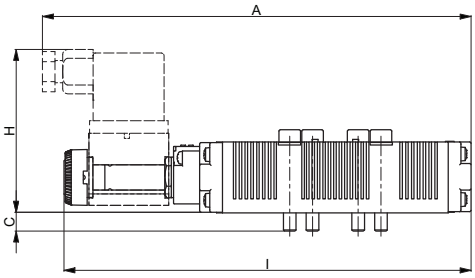

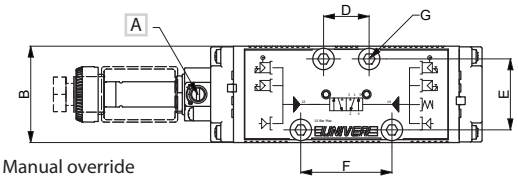

A Manual override

	A	B	C	D	E	F	G	H	I
size 1	171	38	7	18	28	36	M5x35	64	161
size 2	183	50	7	24	38	48	M6x35	64	173

	Symbol	Control 14	Return 12	Size	Pressure bar	Response Time (ms) En.	Response Time (ms) De-en.	Weight Kg	Part no.
5/2	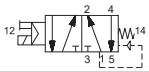	electric amplified	pneumomechanical spring	1 2	2÷10 2,3÷10	18 22	24 18	0,23 0,27	**AE-1000** **AE-1100**

Double electric impulse

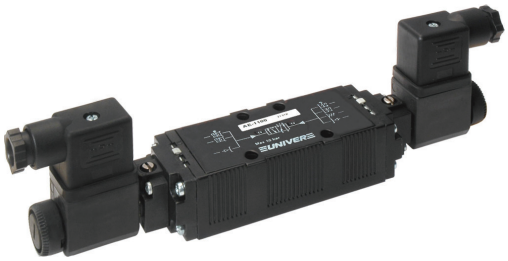

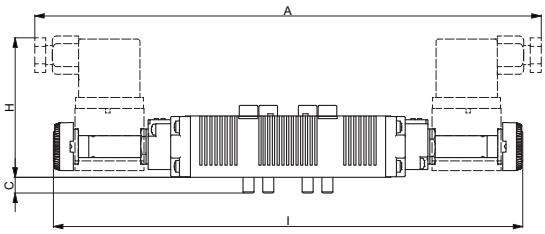

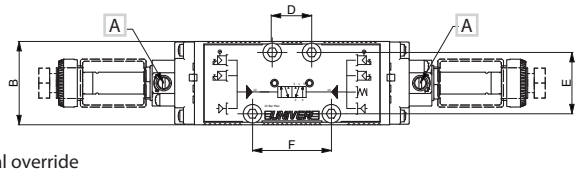

A Manual override

	A	B	C	D	E	F	G	H	I
size 1	234	38	7	18	28	36	M5x35	64	208
size 2	246	50	7	24	38	48	M6x35	64	220

	Symbol	Control 14	Return 12	Size	Pressure bar	Response Time (ms) En.	Response Time (ms) De-en.	Weight Kg	Part no.
5/2	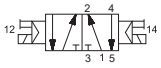	electric amplified	electric amplified	1 2	1÷10 1÷10	16 24	16 24	0,28 0,30	**AE-1003** **AE-1103**

Electrovalves are supplied without coil, connector and locking ring

AM-5151

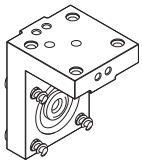

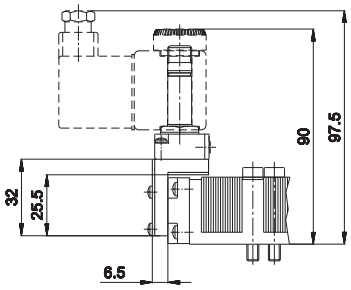

"H" option solenoid square
weight: 0,035 Kg

>> ISO 1 - ISO 2 sub-base

ISO 1 - single sub-base, side connections
BF-1060
G1/8 in-line connections
BF-1061
G1/4 in-line connections

ISO 1 - single modular or Manifold subbase, dorsal connections with separate exhausts
BF-1062
G1/8 dorsal connections
BF-1063
G1/4 dorsal connections

ISO 1 - Manifold universal system sub-base, dorsal and side connections conveyed exhausts
BF-1071
G1/8 dorsal and side connections
BF-1071S
G1/8 side pneumatic impulse
BF-1072
G1/4 dorsal and side connections
BF-1072S
G1/4 side pneumatic impulse

ISO 1 - Manifold universal system inlet plate
BF-1064
G3/8 in-line connections
BF-1065
G3/8 on top connections
BF-1066
G3/8 dorsal connections
BF-1068
G3/8 only in-line connections

ISO 1 - Manifold universal system diaphragm
BF-1070

ISO 2 - single sub-base, side connections
BF-1150
G1/4 in-line connections
BF-1151
G3/8 in-line connections

ISO 2 - single sub-base, dorsal connections
BF-1152
G1/4 dorsal connections
BF-1153
G3/8 dorsal connections

ISO 2 - Manifold universal system sub-base, dorsal and side connections conveyed exhausts
BF-1160
G1/4 dorsal and side connections
BF-1161
G3/8 dorsal and side connections

ISO 2 - Manifold universal system inlet plate
BF-1154
G1/2 in-line connections
BF-1155
G1/2 dorsal connections

ISO 2 - Manifold universal system diaphragm
BF-1162

For sub-base dimensions refer to section **"Standardized valves>BE/BE12"**

BD

ISO 15407-1/2 (VDMA 24563)
ISO 02 (18 mm) - ISO 01 (26 mm) Valves

BDE = solenoid valves ISO 15407/2 with integrated electric connection
BDB = solenoid valves ISO 15407/1 with M12 electric connection
BDA = valves and solenoid valves ISO 15407/1 with standard electrical connection (without coils and connectors to be ordered separately)

- TC Serial communication system available for BDE series
- Modular sub-base ISO-VDMA
- Sub-base with increased capacity

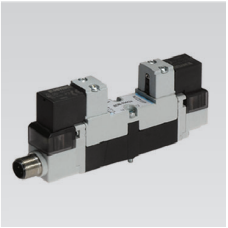

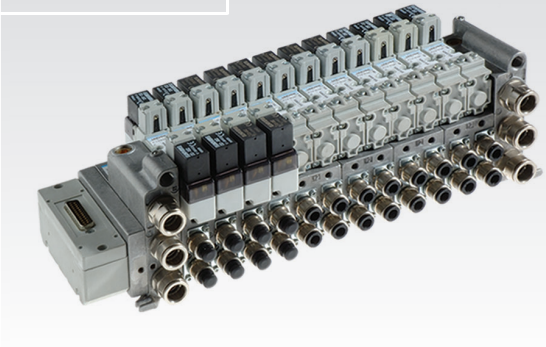

TECHNICAL CHARACTERISTICS

Ambient temperature	-20 ÷ +50 °C
Fluid temperature	Max +50 °C
Fluid	50 µm filtered air, with or without lubrication
Commutation system	spool
Ways/Positions	**3/2+3/2, 5/2, 5/3**
Pressure	**electric control** = 9 bar max
	pneumatic control = 10 bar max
Control	indirect electro - pneumatic, pneumatic
Return	mechanical spring, pneumomechanical spring
Nominal Ø (mm)	**18 mm** = 6 , **26 mm** = 8

Nominal flow rate (Nl/min) for valves and solenoid valves side18 mm (a)

Sub-base in die-cast aluminium according to standard

	VDMA-ISO			Oversize		
Fittings:	**Ø4**	**Ø6**	**Ø8**	**Ø4**	**Ø6**	**Ø8**
5/2	200	440	620	200	480	800
5/3	200	440	580	200	460	720
3/2+3/2	200	440	600	200	460	720

Nominal flow rate (Nl/min) for valves and solenoid valves side 26 mm(b)

Sub-base in die-cast aluminium according to standard

	VDMA-ISO				Oversize			
Fittings:	**Ø6**	**Ø8**	**Ø10**	**Ø12**(c)	**Ø6**	**Ø8**	**Ø10**	**Ø12**(c)
5/2	500	950	1200	1250	500	1050	1500	1700
5/3	500	900	1100	1150	500	1050	1300	1400
3/2+3/2	500	950	1150	1250	500	1050	1450	1650

(a) = manifold sub-base 2 valve places and end plates with side connections in aluminium and fixing plate for fittings standard supplied with sub-base.
(b) = manifold sub-base 1 valve place and end plates with side connections in aluminium and fixing plate for fittings standard supplied with sub-base.
(c) = the external Ø of the G 3/8 fitting for tube Ø12 mm must not exceed 20 mm

CONSTRUCTIVE CHARACTERISTICS

Body valve	acetalic resin with aluminium cover
Seals	nitrile rubber
Sub-base	die-cast alluminium
Actuators	technopolymer
Spool	aluminium

ELECTRIC CHARACTERISTICS

Electropilot/Coil	A series/U05
Voltage	24 V DC (± 10%), 12 V DC upon request
Power consumption	2 W
Protection degree	IP65
Manual override	recessed button - 1 position

See ATEX Catalogue for types and versions

Subject to change

Flow rate characteristics

>> Valves and solenoid valves side **18 mm**

5/2 Oversize sub-base for Ø8 mm tube

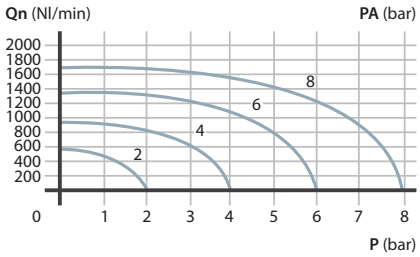

>> Valves and solenoid valves side **26 mm**

5/2 Increased sub-base for Ø12 mm tube

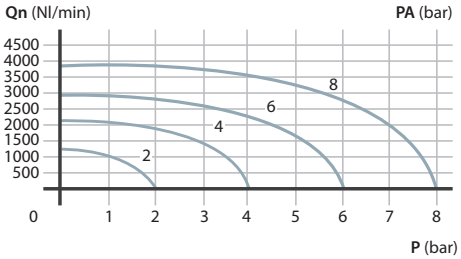

P = Working pressure
PA = Supply pressure
Qn = Nominal flow rate

ISO 15407 specifications

They establish the dimensions of the bearing surface and the minimum distance between two valve places, guaranteeing the interchangeability and possibility to include any valve providing it complies with above specifications.

>> Dimensioning of the bearing surface according to ISO 15407-1/2 specification with integrated electric connector

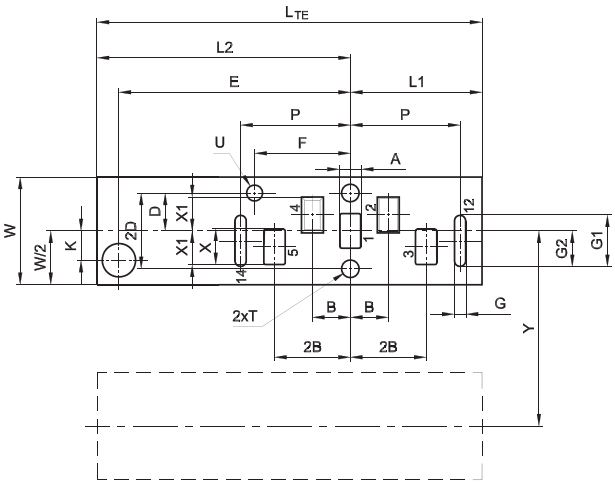

Y = Min. distance between two interface axes of the same dimension mounting on the same manifolds
U = Position bore, depth **V**

	A	B	D	E	F	G	G1	G2	K	L1 min.	L2 min.	LTE min.	P	T	U	V	W min.	X	X1	Y
18 mm	3,5	7	6,25	50	17	2	8	6	3,35	25	55,5	80,5	20	M3	3,2	4	18	6,5	5,25	19
26 mm	5,5	9,5	9,5	58	24	3	13	9	7,35	33	63,5	96,5	27,5	M4	3,2	4	26	9	8,5	27

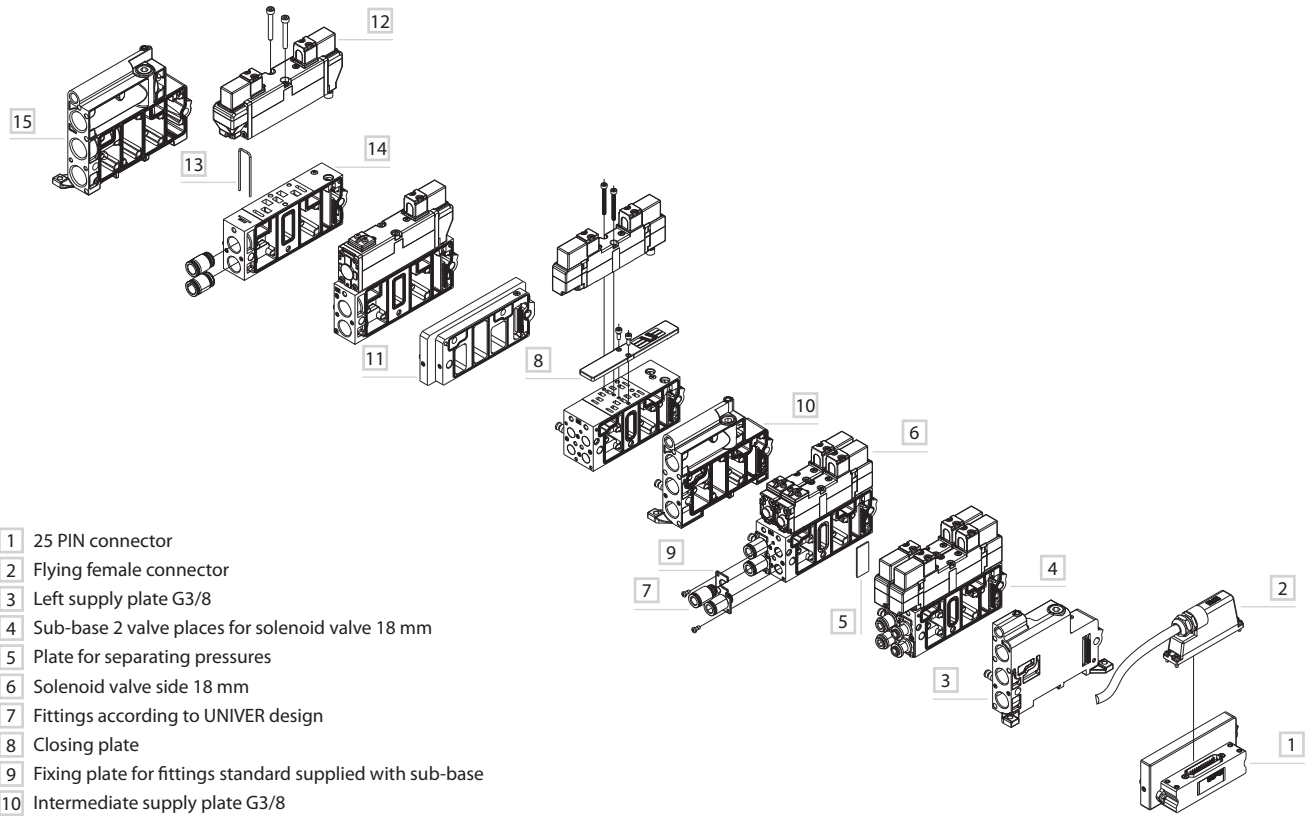

1 25 PIN connector
2 Flying female connector
3 Left supply plate G3/8
4 Sub-base 2 valve places for solenoid valve 18 mm
5 Plate for separating pressures
6 Solenoid valve side 18 mm
7 Fittings according to UNIVER design
8 Closing plate
9 Fixing plate for fittings standard supplied with sub-base
10 Intermediate supply plate G3/8
11 Interface for connecting valves side 18/26 mm
12 Solenoid valve side 26 mm
13 Clamping fork for fittings
14 Sub-base 1 valve place for solenoid valve 26 mm
15 Right supply plate G1/2

CODIFICATION KEY

B	D	E	-	3	3	4	4	2	4	
1				2	3	4	5	6		7

1 Series

BDE = solenoid valves with integrated electric connection 24 V DC (including coil and connector)
BDB = solenoid valves with integrated electric connection 24 V DC, with M12 connector (including coil and connector)

2 Size

3 = side 18 mm
4 = side 26 mm

3 Type

2 = 5/2
3 = 5/3 c.c.
4 = 5/3 o.c.
5 = 5/3 p.c.
6 = 3/2+3/2 NC-NC
7 = 3/2+3/2 NC-NO
8 = 3/2+3/2 NO-NO

4 Control 14

4 = electric amplified

5 Return 12

0 = pneumomechanical spring
1 = mechanical spring
4 = electric amplified
7 = electric not amplified

6 Coil voltage

24 = 24 V DC (standard)
12 = 12 V DC (upon request)

7 Options

D = externally servoassisted electropilot

o.c. = open centres **c.c.** = closed centres **p.c.** = pressurized centre

B	D	A	-	3	3	4	4		
1				2	3	4	5	6	7

1 Series

BDA = valves and solenoid valves (without coil and connectors to be ordered separately)

2 Size

3 = side 18 mm
4 = side 26 mm

3 Type

2 = 5/2
3 = 5/3 c.c.
4 = 5/3 o.c.
5 = 5/3 p.c.
6 = 3/2+3/2 NC-NC
7 = 3/2+3/2 NC-NO
8 = 3/2+3/2 NO-NO

4 Control 14

3 = pneumatic amplified
4 = electric amplified only DC
5 = electric amplified DC and AC

5 Return 12

0 = pneumomechanical spring
1 = mechanical spring
2 = pneumatic not amplified
3 = pneumatic amplified
4 = electric amplified only DC
5 = electric amplified DC and AC
7 = electric non amplified only DC
8 = electric non amplified DC and AC

6 Options

D = externally servoassisted electropilot

7 ATEX Options

X = Atex (upon request)

See ATEX Catalogue for types and versions

o.c. = open centres **c.c.** = closed centres **p.c.** = pressurized centre

>> Coils U05 side15 mm

Part no.	Nominal voltage		Frequency	Power consumption			
				CCW		CA	VA
	DC v	AC v	HZ	rating	start	rating	start
DD-040	-	24	50/60	-	-	2,3	3,2
DD-042	12	-	-	2,5	2,5	-	-
DD-050	-	48	50/60	-	-	2,3	3,2
DD-051	24	-	-	2	2	-	-
DD-052	24	-	-	2,5	2,5	-	-
DD-060	-	110	50/60	-	-	3,5	3,2
DD-070	-	230	50/60	-	-	2,3	3,2

LED connector AM-5109/AM5105 24V DC 50/60 Hz
It can rotate by 180° on the coil - IP65 - cable connection PG9

Single **electric** impulse**18 mm**

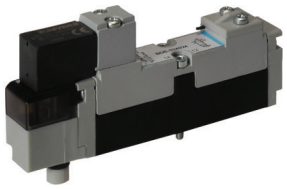

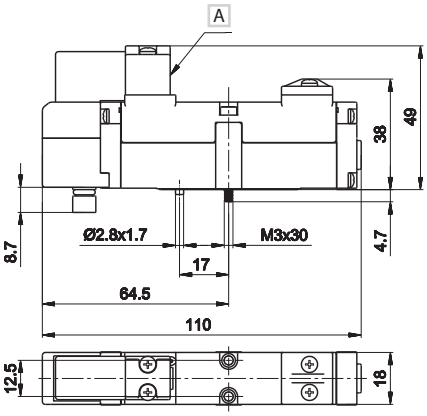

A Manual override

Weight (Kg): 0,112

	Symbol	Control	Return	Pressure	Resp. Time (ms)		Part no.
		14	12	bar	En.	De-en.	
5/2	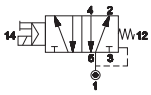	electric amplified	pneumo mechanical spring	1,8÷9	15	25	**BDE-324024**
5/2	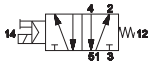	electric amplified	mechanical spring	2,5÷9	14	37	**BDE-324124**

Double **electric** impulse **18 mm**

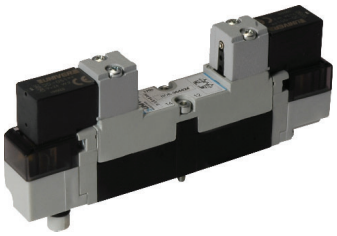

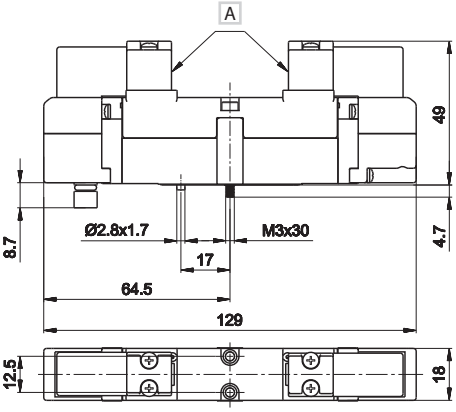

A Manual override

Weight (Kg): 0,131

	Symbol	Control	Return	Pressure	Resp. Time (ms)		Part no.
		14	12	bar	En.	De-en.	
5/2	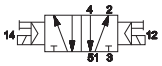	electric amplified	electric amplified	0,8÷9	16	16	**BDE-324424**
5/3 c.c.	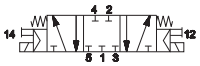	electric amplified	electric amplified	2,1÷9	14	31	**BDE-334424**
5/3 o.c.	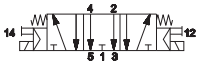	electric amplified	electric amplified	2,1÷9	14	31	**BDE-344424**
5/3 p.c.	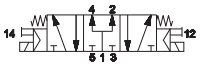	electric amplified	electric amplified	2,1÷9	31	14	**BDE-354424**
3/2 NC + 3/2 NC	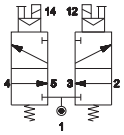	electric amplified	electric amplified	1,8÷9	17	22	**BDE-364424**
3/2 NC + 3/2 NO	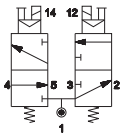	electric amplified	electric amplified	1,8÷9	17	22	**BDE-374424**
3/2 NO + 3/2 NO	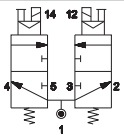	electric amplified	electric amplified	1,8÷9	17	22	**BDE-384424**

o.c. = open centres **c.c.** = closed centres **p.c.** = pressurized centres

Single **electric** impulse **26 mm**

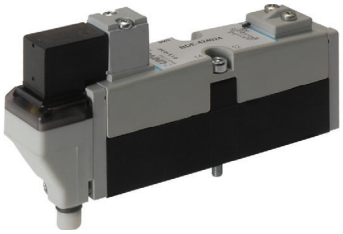

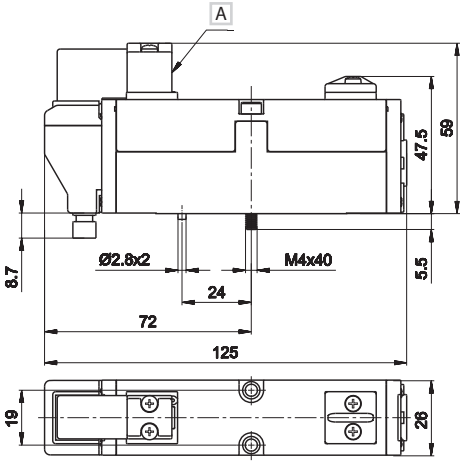

A Manual override

Weight (Kg): 0,205

	Symbol	Control	Return	Pressure	Resp. Time (ms)		Part no.
		14	12	bar	En.	De-en.	
5/2	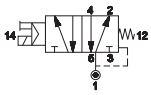	electric amplified	pneumo mechanical spring	1,8÷9	21	40	**BDE-424024**
5/2	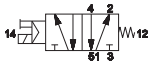	electric amplified	mechanical spring	2,5÷9	20	50	**BDE-424124**

Double **electric** impulse **26 mm**

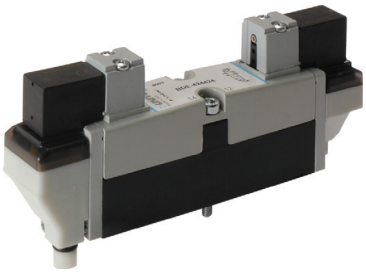

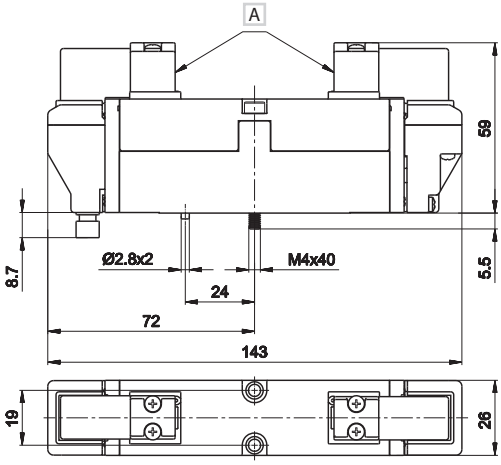

A Manual override

Weight (Kg): 0,232

	Symbol	Control	Return	Pressure	Resp. Time (ms)		Part no.
		14	12	bar	En.	De-en.	
5/2	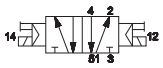	electric amplified	electric amplified	0,8÷9	17	17	**BDE-424424**
5/3 c.c.	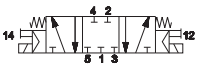	electric amplified	electric amplified	2,1÷9	16	54	**BDE-434424**
5/3 o.c.	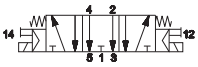	electric amplified	electric amplified	2,1÷9	16	54	**BDE-444424**
5/3 p.c.	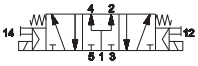	electric amplified	electric amplified	2,1÷9	63	16	**BDE-454424**
3/2 NC + 3/2 NC	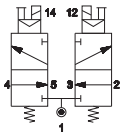	electric amplified	electric amplified	1,8÷9	20	27	**BDE-464424**
3/2 NC + 3/2 NO	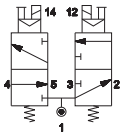	electric amplified	electric amplified	1,8÷9	20	27	**BDE-474424**
3/2 NO + 3/2 NO	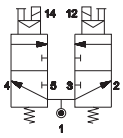	electric amplified	electric amplified	1,8÷9	20	27	**BDE-484424**

o.c. = open centres **c.c.** = closed centres **p.c.** = pressurized centres

Single **electric** impulse**18 mm**

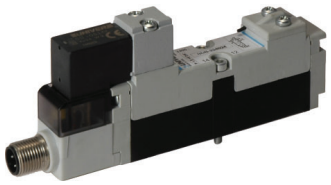

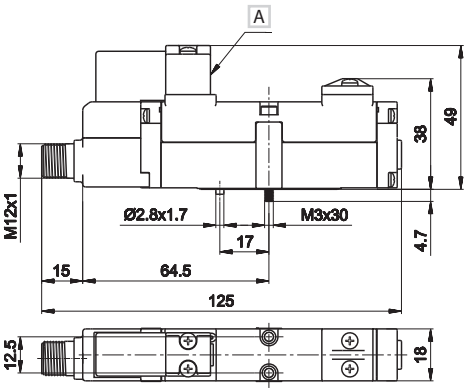

A Manual override

Weight (Kg): 0,117

	Symbol	Control 14	Return 12	Pressure bar	Resp. Time (ms) En.	Resp. Time (ms) De-en.	Part no.
5/2	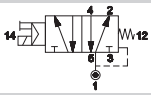	electric amplified	pneumo mechanical spring	1,8÷9	15	25	**BDB-324024**
5/2	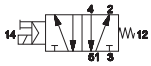	electric amplified	mechanical spring	2,5÷9	14	37	**BDB-324124**

Double **electric** impulse**18 mm**

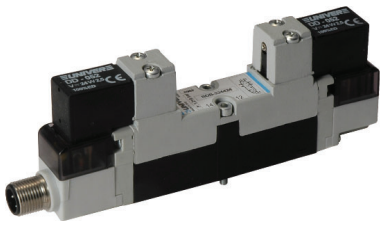

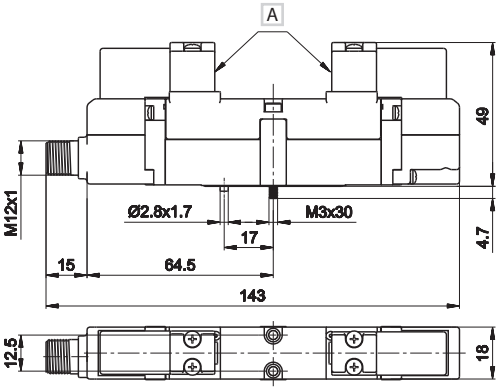

A Manual override

Weight (Kg): 0,136

	Symbol	Control 14	Return 12	Pressure bar	Resp. Time (ms) En.	Resp. Time (ms) De-en.	Part no.
5/2	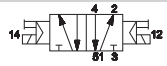	electric amplified	electric amplified	0,8÷9	16	16	**BDB-324424**
5/3 c.c.	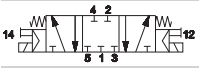	electric amplified	electric amplified	2,1÷9	14	31	**BDB-334424**
5/3 o.c.	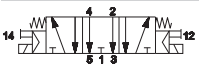	electric amplified	electric amplified	2,1÷9	14	31	**BDB-344424**
5/3 p.c.	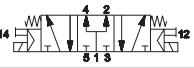	electric amplified	electric amplified	2,1÷9	31	14	**BDB-354424**
3/2 NC + 3/2 NC	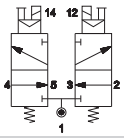	electric amplified	electric amplified	1,8÷9	17	22	**BDB-364424**
3/2 NC + 3/2 NO	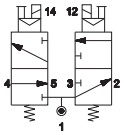	electric amplified	electric amplified	1,8÷9	17	22	**BDB-374424**
3/2 NO + 3/2 NO	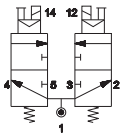	electric amplified	electric amplified	1,8÷9	17	22	**BDB-384424**

o.c. = open centres **c.c.** = closed centres **p.c.** = pressurize centres

ELECTRIC CHARACTERISTICS
Electric connector M12x1
IP 65 protection degree
24 V DC voltage
2,5 W nominal power
DD-052** series coil (without faston)
ED 100%
LED indicator

Available upon request other voltages max 48V DC

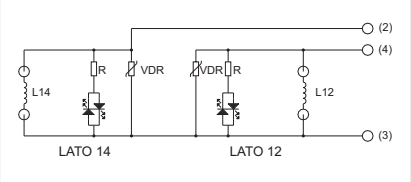

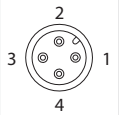

Single **electric** impulse **26 mm**

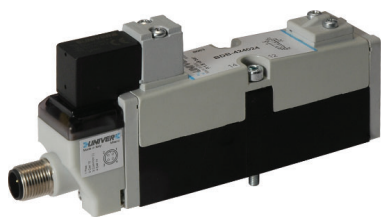

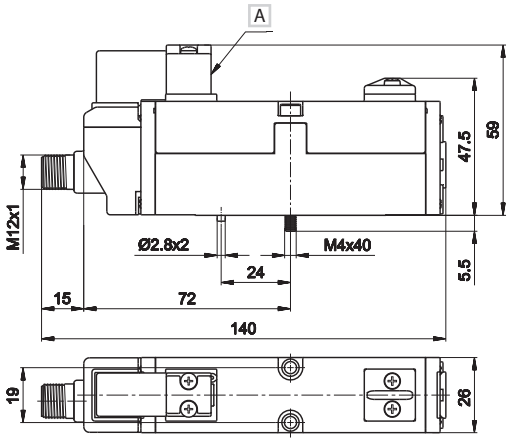

A Manual override

Weight (Kg):	0,205

	Symbol	Control 14	Return 12	Pressure bar	Resp. Time (ms) En.	Resp. Time (ms) De-en.	Part no.
5/2	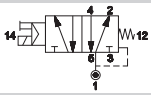	electric amplified	molla pneumo mechanical	1,8÷9	21	40	**BDB-424024**
5/2		electric amplified	molla mechanical	2,5÷9	20	50	**BDB-424124**

Double **electric** impulse **26 mm**

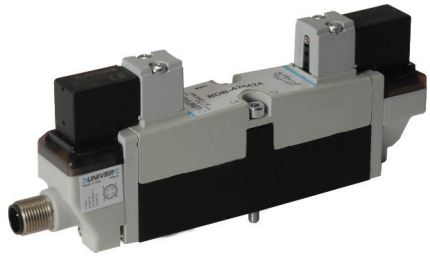

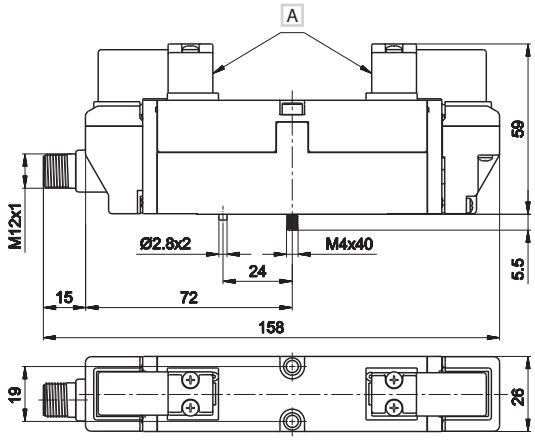

A Manual override

Weight (Kg):	0,236

	Symbol	Control 14	Return 12	Pressure bar	Resp. Time (ms) En.	Resp. Time (ms) De-en.	Part no.
5/2	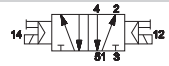	electric amplified	electric amplified	2,5÷9	17	17	**BDB-424424**
5/3 c.c.	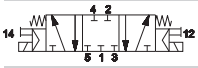	electric amplified	electric amplified	2,1÷9	16	54	**BDB-434424**
5/3 o.c.	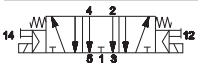	electric amplified	electric amplified	2,1÷9	16	54	**BDB-444424**
5/3 p.c.	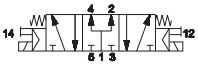	electric amplified	electric amplified	2,1÷9	63	16	**BDB-454424**
3/2 NC + 3/2 NC	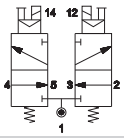	electric amplified	electric amplified	1,8÷9	20	27	**BDB-464424**
3/2 NC + 3/2 NO	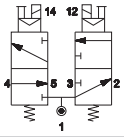	electric amplified	electric amplified	1,8÷9	20	27	**BDB-474424**
3/2 NO + 3/2 NO	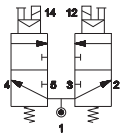	electric amplified	electric amplified	1,8÷9	20	27	**BDB-484424**

o.c. = open centres **c.c.** = closed centres **p.c.** = pressurize centres

ELECTRIC CHARACTERISTICS
Electric connector M12x1
IP 65 protection degree
24 V DC voltage
2,5 W nominal power
DD-052** series coil (without faston)
ED 100%
LED indicator

Available upon request other voltages max 48V DC

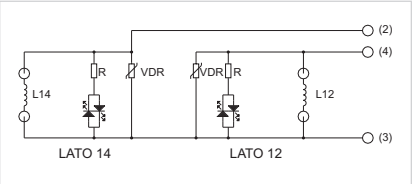

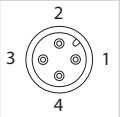

Single **electric** impulse**18 mm**

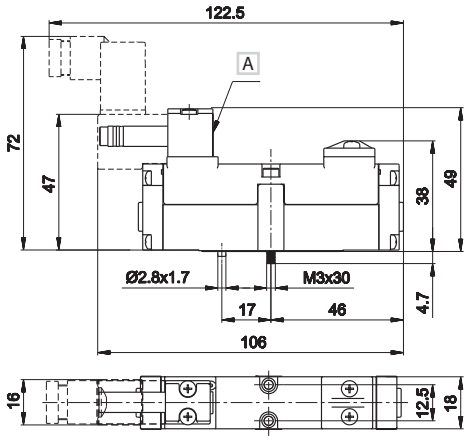

A Manual override

Weight (Kg): 0,107

	Symbol	Control 14	Return 12	Pressure bar	Resp. Time (ms) En.	Resp. Time (ms) De-en.	Part no.
5/2	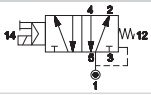	electric amplified	pneumo mechanical spring	1,8÷9	15	25	**BDA-3240**
5/2	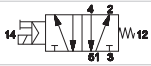	electric amplified	mechanical spring	2,5÷9	14	37	**BDA-3241**

Double **electric** impulse**18 mm**

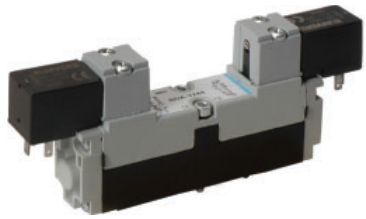

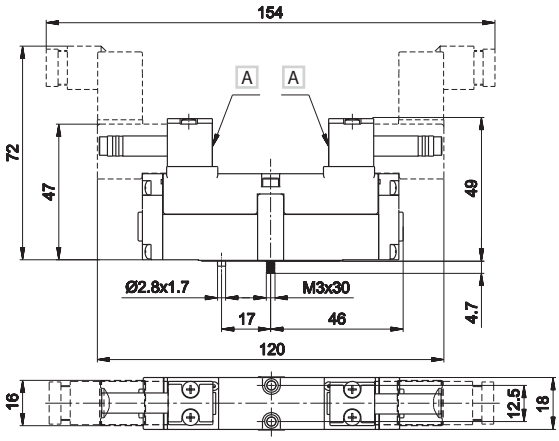

A Manual override

Weight (Kg): 0,123

	Symbol	Control 14	Return 12	Pressure bar	Resp. Time (ms) En.	Resp. Time (ms) De-en.	Part no.
5/2	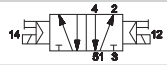	electric amplified	electric amplified	0,8÷9	16	16	**BDA-3244**
5/3 c.c.	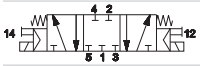	electric amplified	electric amplified	2,1÷9	14	31	**BDA-3344**
5/3 o.c.	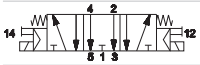	electric amplified	electric amplified	2,1÷9	14	31	**BDA-3444**
5/3 p.c.	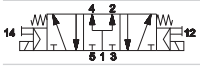	electric amplified	electric amplified	2,1÷9	31	14	**BDA-3544**
3/2 NC + 3/2 NC	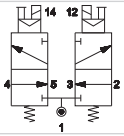	electric amplified	electric amplified	1,8÷9	17	22	**BDA-3644**
3/2 NC + 3/2 NO	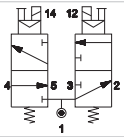	electric amplified	electric amplified	1,8÷9	17	22	**BDA-3744**
3/2 NO + 3/2 NO	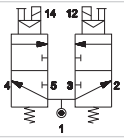	electric amplified	electric amplified	1,8÷9	17	22	**BDA-3844**

o.c. = open centres **c.c.** = closed centres **p.c.** = pressurized centres

BDA solenoid valves are supplied without coils and connectors

Single **electric** impulse **26 mm**

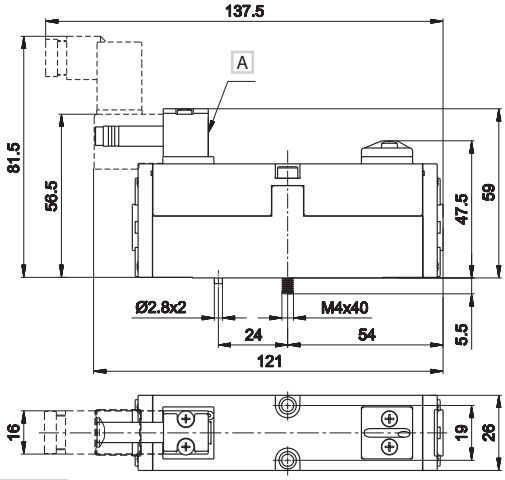

A Manual override

Weight (Kg): 0,197

	Symbol	Mando 14	Return 12	Pressure bar	Resp. Time (ms) En.	Resp. Time (ms) De-en.	Part no.
5/2	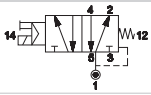	electric amplified	pneumo mechanical spring	1,8÷9	21	40	**BDA-4240**
5/2	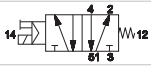	electric amplified	mechanical spring	2,5÷9	20	50	**BDA-4241**

Double **electric** impulse **26 mm**

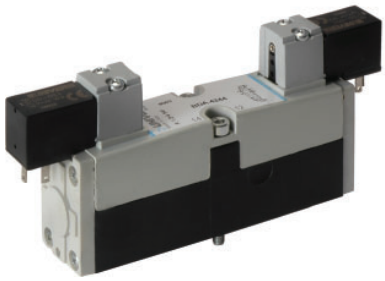

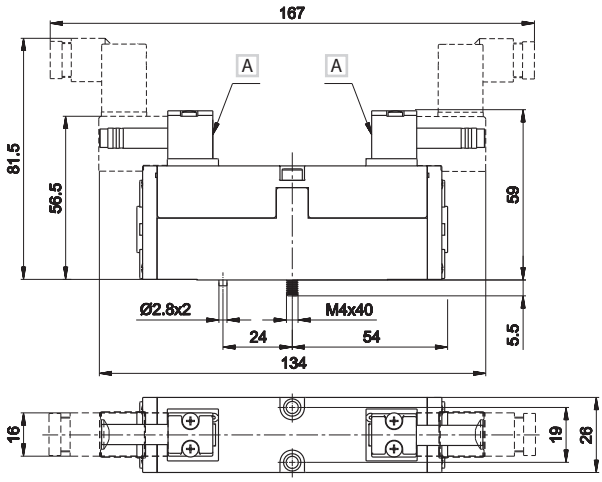

A Manual override

Weight (Kg): 0,218

	Symbol	Control 14	Return 12	Pressure bar	Resp. Time (ms) En.	Resp. Time (ms) De-en.	Part no.
5/2	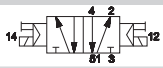	electric amplified	electric amplified	1,2÷9	17	17	**BDA-4244**
5/3 c.c.	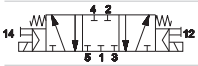	electric amplified	electric amplified	2,1÷9	16	54	**BDA-4344**
5/3 o.c.	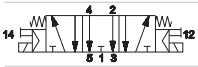	electric amplified	electric amplified	2,1÷9	16	54	**BDA-4444**
5/3 p.c.	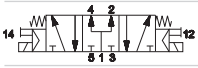	electric amplified	electric amplified	2,1÷9	63	16	**BDA-4544**
3/2 NC + 3/2 NC	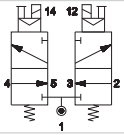	electric amplified	electric amplified	1,8÷9	20	27	**BDA-4644**
3/2 NC + 3/2 NO	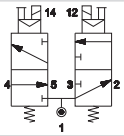	electric amplified	electric amplified	1,8÷9	20	27	**BDA-4744**
3/2 NO + 3/2 NO	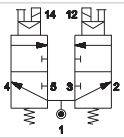	electric amplified	electric amplified	1,8÷9	20	27	**BDA-4844**

o.c. = open centres **c.c.** = closed centres **p.c.** = pressurized centres

BDA solenoid valves are supplied without coils and connectors

Single/double **pneumatic** impulse **18 mm**

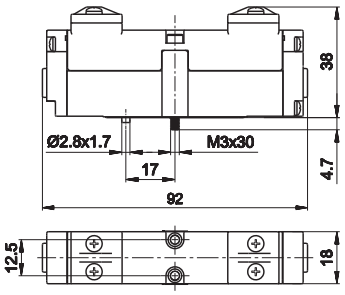

Weight (Kg): 0,092/0,098

	Symbol	Control	Return	Pressure	Resp. Time (ms)		Part no.
		14	12	bar	En.	De-en.	
5/2	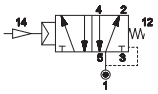	pneumatic amplified	pneumo mechanical spring	1,8÷10	13	30	**BDA-3230**
5/2	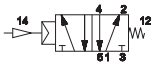	pneumatic amplified	mechanical spring	2,5÷10	11	35	**BDA-3231**
5/2	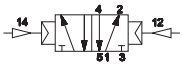	pneumatic amplified	pneumatic amplified	0,8÷10	8	8	**BDA-3233**
5/3 c.c.	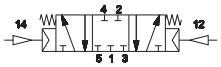	pneumatic amplified	pneumatic amplified	2,1÷10	9	15	**BDA-3333**
5/3 o.c.	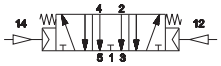	pneumatic amplified	pneumatic amplified	2,1÷10	9	15	**BDA-3433**
5/3 p.p.	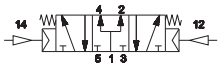	pneumatic amplified	pneumatic amplified	2,1÷10	9	15	**BDA-3533**
3/2 NC + 3/2 NC	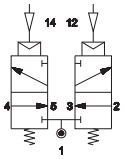	pneumatic amplified	pneumatic amplified	1,8÷10	5	14	**BDA-3633**
3/2 NC + 3/2 NO	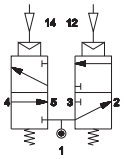	pneumatic amplified	pneumatic amplified	1,8÷10	5	14	**BDA-3733**
3/2 NO + 3/2 NO	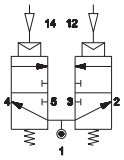	pneumatic amplified	pneumatic amplified	1,8÷10	5	14	**BDA-3833**

o.c. = open centres **c.c.** = closed centres **p.c.** = pressurized centres

Single/double **pneumatic** impulse **26 mm**

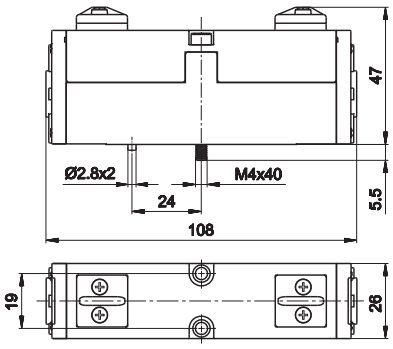

Weight (Kg): 0,185/0,204

	Symbol	Control	Return	Pressure	Resp. Time (ms)		Part no.
		14	12	bar	En.	De-en.	
5/2	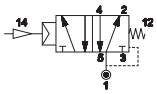	pneumatic amplified	pneumo mechanical spring	1,8÷10	15	33	**BDA-4230**
5/2	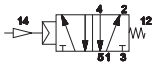	pneumatic amplified	mechanical spring	2,5÷10	13	38	**BDA-4231**
5/2	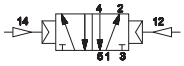	pneumatic amplified	pneumatic amplified	1,2÷10	10	10	**BDA-4233**
5/3 c.c.	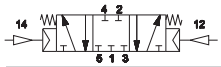	pneumatic amplified	pneumatic amplified	1,2÷10	14	18	**BDA-4333**
5/3 o.c.	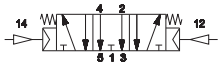	pneumatic amplified	pneumatic amplified	1,2÷10	14	18	**BDA-4433**
5/3 p.p.	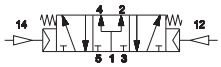	pneumatic amplified	pneumatic amplified	1,2÷10	14	18	**BDA-4533**
3/2 NC + 3/2 NC	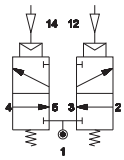	pneumatic amplified	pneumatic amplified	1,8÷10	8	14	**BDA-4633**
3/2 NC + 3/2 NO	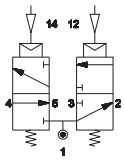	pneumatic amplified	pneumatic amplified	1,8÷10	8	14	**BDA-4733**
3/2 NO + 3/2 NO	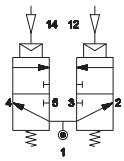	pneumatic amplified	pneumatic amplified	1,8÷10	8	14	**BDA-4833**

o.c. = open centres **c.c.** = closed centres **p.c.** = pressurized centres

3
VALVES

Integrated electric connection side 18 mm

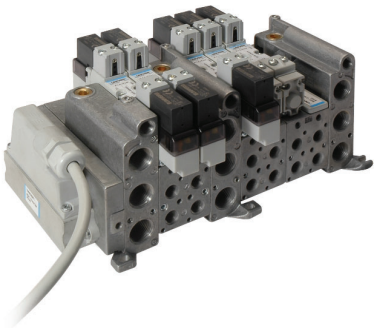

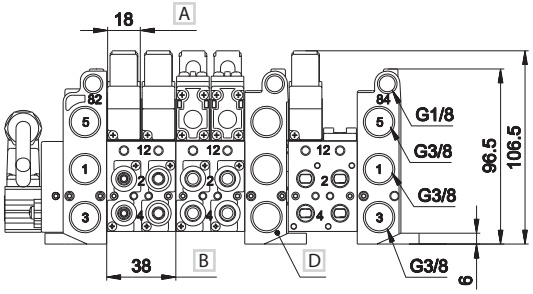

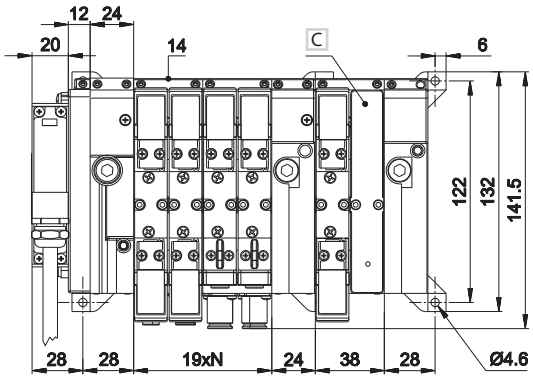

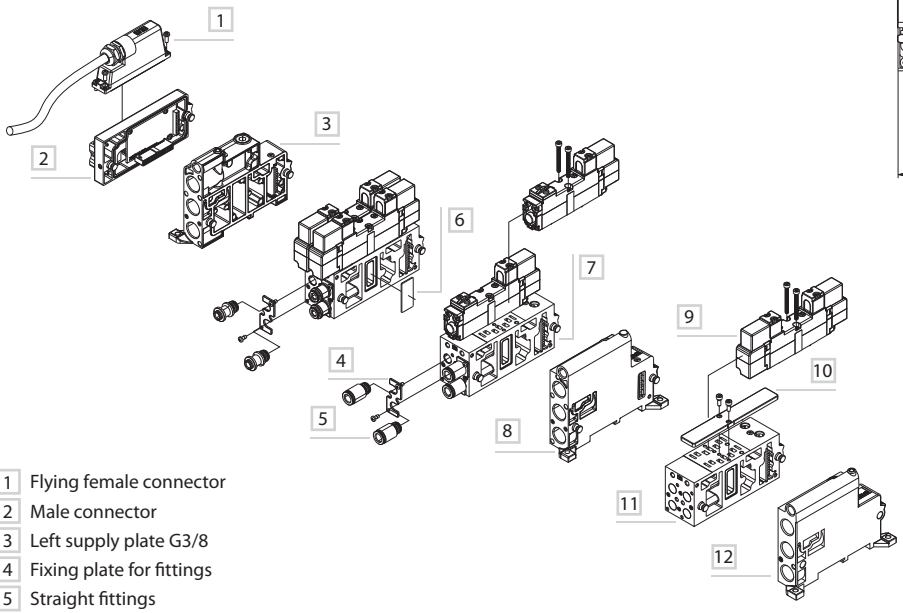

A Valve thickness
B Sub-base 2 places valve
C Closing plate for unused valve place BDF-3185
D Intermediate supply plate

1 = Supply port
2 - 4 = Use
3 - 5 = Exhaust
14 = Control
12 = Return

N = Number of valve places

3

1 Flying female connector
2 Male connector
3 Left supply plate G3/8
4 Fixing plate for fittings
5 Straight fittings
6 Plate for separating pressures
7 Integrated electric connection
8 Intermediate supply plate G3/8
9 Solenoid vale side 18 mm
10 Closing plate
11 Sub-base 2 valve places
12 Right supply plate G3/8

BDF-3100	BDF-3115	BDF-3120	BDF-3140TIM	BDF-3180	BDF-3185	BDF-3190
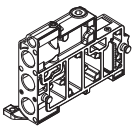	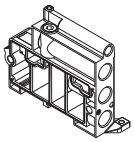	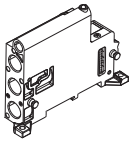	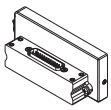		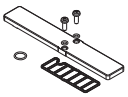	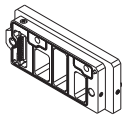
left supply plate G3/8 with integrated electric connection weight: 0,292 Kg	right supply plate G3/8 weight: 0,276 Kg	intermediate supply plate G3/8 with integrated electric connection weight: 0,29 Kg	multiway connection module, 25 poles male type D side 18 mm weight: 0,158 Kg	plate for separating supply pressures weight: 0,002 Kg	plate for closing unused valve place weight: 0,038 Kg	interface for connecting valves side 18-26 mm with integrated electric connection weight: 0,216 Kg

BDF-3210 (b)	BDF-3230 (a) - (b)	BDF-3310 (b)	BDF-3330 (a) - (b)	BDF-3400	GZR-100	GZR-V10004/06/08
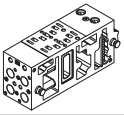	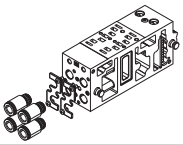	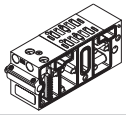	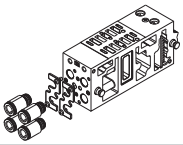			
sub base 2 places according to VDMA-ISO specifications flow rate 620 Nl/min G1/8 connections weight: 0,324 Kg	sub base 2 places according to VDMA-ISO specifications flow rate 620 Nl/min for fittings Ø 4-6-8 mm weight: 0,334 Kg	sub base 2 places with increased capacity 800 Nl/min G1/8 connections weight: 0,322 Kg	sub base 2 places with increased capacity 800 Nl/min for fittings Ø 4-6-8 mm weight: 0,334 Kg	single sub-base 1 place with increased capacity G1/8 connections weight: 0,12 Kg	screw plug weight: 0,01 Kg	fittings according to UNIVER design (package 50 pcs.) **GZR-V10004** Ø4 mm **GZR-V10006** Ø6 mm **GZR-V10008** Ø8 mm weight: 0,01 Kg each.

(a) = sub-base including fixing plates for fittings (fittings excluded) (b) = part no. codification: **0 = electric integrated**

Subject to change

Integrated electric connection side 26 mm

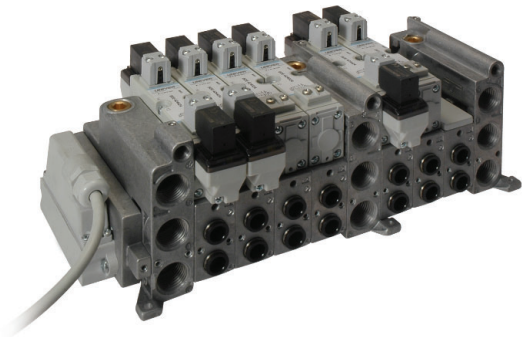

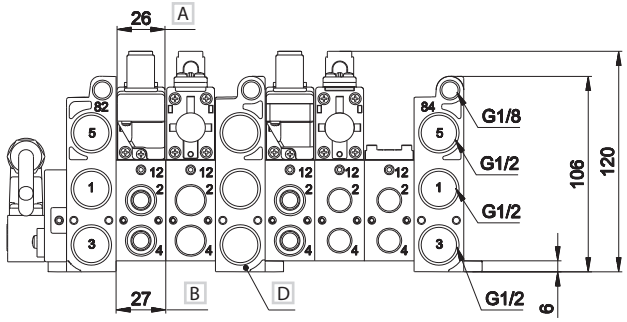

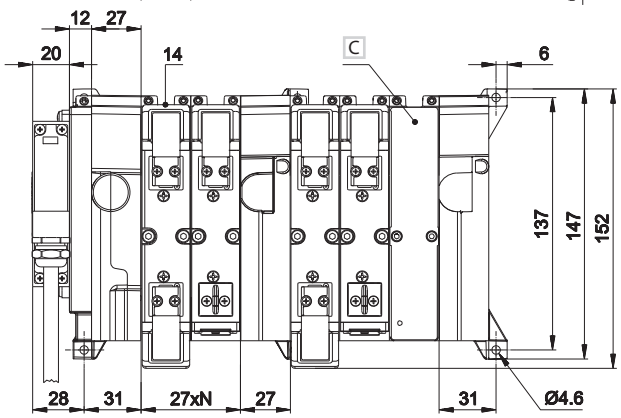

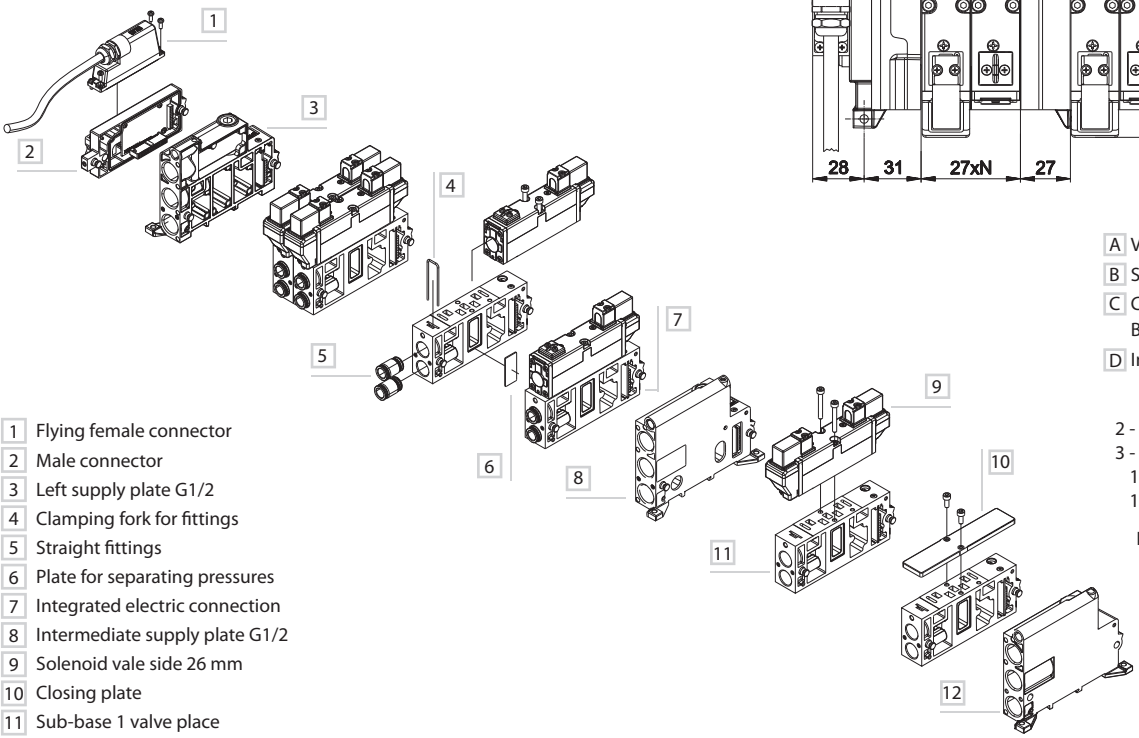

1 Flying female connector
2 Male connector
3 Left supply plate G1/2
4 Clamping fork for fittings
5 Straight fittings
6 Plate for separating pressures
7 Integrated electric connection
8 Intermediate supply plate G1/2
9 Solenoid vale side 26 mm
10 Closing plate
11 Sub-base 1 valve place
12 Right supply plate G1/2

A Valve thickness
B Sub-base1 place valve
C Closing plate for unused valve place BDF-4185
D Intermediate supply plate

1 = Supply port
2 - 4 = Use
3 - 5 = Exhaust
14 = Control
12 = Return

N = Number of valve place

BDF-4100	BDF-4115	BDF-4120	BDF-4140TIM	BDF-4180	BDF-4185
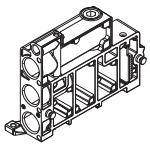	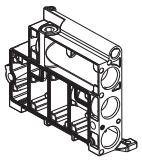	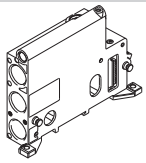	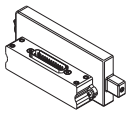		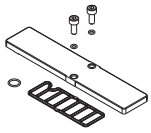
left supply plate G1/2 with integrated electric connection weight: 0,396 Kg	right supply plate G1/2 weight: 0,418 Kg	intermediate supply plate G1/2 with integrated electric connection weight: 0,396 Kg	multiway connection module, 25 poles male type D side 26 mm weight: 0,158 Kg	plate for separating supply pressures weight: 0,002 Kg	plate for closing unused valve place weight: 0,08 Kg

BDF-4210/20 (b)	BDF-4230 (a) - (b)	BDF-4310/20 (b)	BDF-4330/31/32 (a) - (b)	BDF-4400	GZR-VV1006/08/10
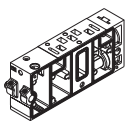	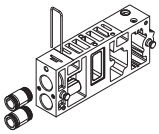	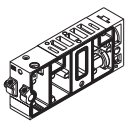	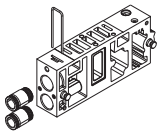	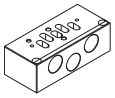	
sub base 1 place according to VDMA-ISO specification flow rate 1250 Nl/min G1/4 connections **BDF-4210** weight: 0,254 Kg G3/8 connections **BDF-4220** weight: 0,246 Kg	sub base 1 place according to VDMA-ISO specification flow rate 1250 Nl/min for fittings Ø 6-8-10 mm **BDF-4230** weight: 0,23 Kg	sub base 1 place with increased capacity flow rate 1700 Nl/min G1/4 connections **BDF-4310** weight: 0,254 Kg G3/8 connections **BDF-4320** weight: 0,246 Kg	sub base 1 place with increased capacity flow rate 1700 Nl/min for fittings Ø 6-8-10 mm **BDF-4330** weight: 0,23 Kg	single sub-base 1 place with increased capacity G3/8 connections weight: 0,226 Kg	fittings according to UNIVER design (package 50 pcs.) **GZR-VV1006** Ø 6mm **GZR-VV1008** Ø 8mm **GZR-VV1010** Ø 10mm weight: 0,014 Kg each.

(a) = sub-base including fixing plates for fittings (fittings excluded) (b) = part no. codification: **0 = electric integrated**

CONFIGURATION KEY

										1	2	3	4	5	6	7	8	9	10	11	12		
B	D	E	3	P	N	1	0	0	0	6	C 8	C 8	C 8	C 8	C 8	Z 8							
1			2	3	4		5			6	7												

1 Valve series

BDE = Solenoid valves with integrated electrical connection 24 V DC

2 Valve size

3 = 18 mm

3 Electrical Connection and Bus Modules **

M* = Multipin
P = Profinet
B = Profibus
E = Ethernet
C = CANopen
D = DeviceNet
L* = IO Link
T = EtherCAT

* = Auxiliary Inputs and Outputs cannot be added
** = For more details see section "Serial Communication Systems"

4 Auxiliary Inputs

INPUT module M12	Number of modules	
0 = no additional module	**0**	no additional module
N = 16 input	**1-2-3-4**	up to max. 4 modules
H = 8 input	**1-2-3-4-5-6-7-8**	up to max. 8 modules

5 Auxiliary Outputs

OUTPUT module M12	Number of modules	
0 = no additional module	**0**	no additional module
U = 8 output	**1-2-3-4-5-6-7-8**	up to max. 8 modules (Profinet, Ethernet) up to max. 5 modules (Profibus, CANopen, DeviceNet)

6 Valve Places

02 = 2 places
04 = 4 places
06 = 6 places
08 = 8 places
10 = 10 places
12 = 12 places

up to max. 24 signals

7 Valve/Base Stations

Every station is made of 1 double sub-base hosting 2 valve places.
The choice of the sub-base kind is valid for the complete station

Valve

A = 5/2 monostable mechanical spring
B = 5/2 monostable pneumatic spring
C = 5/2 bistable
D = 5/3 c.c.
E = 5/3 o.c.
F = 5/3 p.c.
G = 3/2+3/2 NC-NC
H =3/2+3/2 NC-NO
L = 3/2+3/2 NO-NO
Z = closing plate
V = void place

Sub-base kind

1 = ISO interface - G1/8 (fittings not included)
2 = ISO interface - tube 4
3 = ISO interface - tube 6
4 = ISO interface - tube 8
5 = OVERSIZED interface - G1/8 (fittings not included)
6 = OVERSIZED interface - tube 4
7 = OVERSIZED interface - tube 6
8 = OVERSIZED interface - tube 8

o.c. = open centres **c.c.** = closed centres **p.c.** = pressurized centre

Note

- External pilot supply available upon request
- Special configurations available upon request
- Accessories (fittings, silencers, supply adapters, connectors, intermediate supply plates etc) can be added upon request

Example

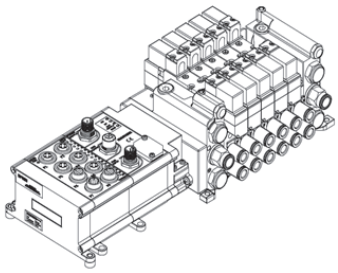

Part no BDE3806201221

Description BDE3PN10006C8C8C8C8C8Z8+accessories

BDE3PN10006C8C8C8C8Z8

BDE-324424	5/2 bistable EL/EL	5
BDF-3100	left plate 3/8 electrical integrated	1
BDF-3115	right plate 3/8	1
BDF-3140TIM	module TIM 25 poles male	1
BDF-3185	closing plate	1
BDF-3330	2 pos. OVERSIZED base electrical integrated	3
GZR-V10008	straight fitting Ø 8	12
TCXPN	ProfiNet module 16 inputs M12	1
TC16I812	16 inputs M12	1
TFP060	2 module supports 6 mm VDMA 18-26	1

Accessories (to be requested separately)

HC510018	silencer 1/8	2
HC510038	silencer 3/8	4
HA260800	plug Ø 8	2
HA261000	plug Ø 10	1
HB041038	straight male tube 10 3/8	2

CONFIGURATION KEY

									1	2	3	4	5	6	7	8	9	10	11	12			
B	D	E	4	P	N	2	U	1	0	6	C	1	C	1	C	1	C	1	C	1	Z	1	
1			2	3	4		5		6		7												

1 Valve series

BDE = Solenoid valves with integrated electrical connection 24 V DC

2 Valve size

3 = 26 mm

3 Electrical Connection and Bus Modules **

M* = Multipin
P = Profinet
B = Profibus
E = Ethernet
C = CANopen
D = DeviceNet
L* = IO Link
T = EtherCAT

* = Auxiliary Inputs and Outputs cannot be added
** = For more details see section "Serial Communication Systems"

4 Auxiliary Inputs

INPUT module M12	Number of modules	
0 = no additional module	**0**	no additional module
N = 16 input	**1-2-3-4**	up to max. 4 modules
H = 8 input	**1-2-3-4-5-6-7-8**	up to max. 8 modules

5 Auxiliary Outputs

OUTPUT module M12	Number of modules	
0 = no additional module	**0**	no additional module
U = 8 output	**1-2-3-4-5-6-7-8**	up to max. 8 modules (Profinet, Ethernet) up to max. 5 modules (Profibus, CANopen, DeviceNet)

6 Valve Places

02 = 2 places
03 = 3 places
04 = 4 places
05 = 5 places
06 = 6 places
07 = 7 places
08 = 8 places
09 = 9 places
10 = 10 places
11 = 11 places
12 = 12 places

up to max. 24 signals

7 Valve/Base Stations

Every station is made of 1 double sub-base hosting 2 valve places.
The choice of the sub-base kind is valid for the complete station

Valve

A = 5/2 monostable mechanical spring
B = 5/2 monostable pneumatic spring
C = 5/2 bistable
D = 5/3 c.c.
E = 5/3 o.c.
F = 5/3 p.c.
G = 3/2+3/2 NC-NC
H =3/2+3/2 NC-NO
L = 3/2+3/2 NO-NO
Z = closing plate
V = void place

Sub-base kind

1 = ISO interface - G1/4 (fittings not included)
2 = ISO interface - G3/8 (fittings not included)
3 = ISO interface - tube 6
4 = ISO interface - tube 8
5 = ISO interface - tube 10
6 = OVERSIZED interface - G1/4 (fittings not included)
7 = OVERSIZED interface - G3/8 (fittings not included)
8 = OVERSIZED interface - tube 6
9 = OVERSIZED interface - tube 8
10 = OVERSIZED interface - tube 10

o.c. = open centres **c.c.** = closed centres **p.c.** = pressurized centre

Note

- External pilot supply available upon request
- Special configurations available upon request
- Accessories (fittings, silencers, supply adapters, connectors, intermediate supply plates etc) can be added upon request

Example

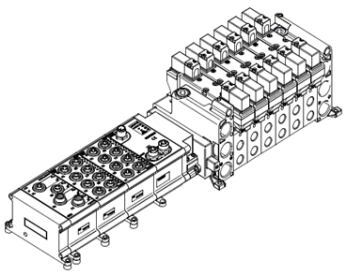

Part no BDE4206201211

Description BDE4PN2U106C1C1C1C1C1C1

BDE4PN2U106C1C1C1C1C1C1

BDE-424424	5/2 bistable EL/EL	6
BDF-4100	left plate 3/8 electrical integrated	1
BDF-4115	right plate 1/2	1
BDF-4140TIM	module TIM 25 poles male	1
BDF-4210	base 1/4 port. VDMA electrical integrated	6
TCXPN	module ProfiNet 32	1
TC16I812	16 Input M12	2
TC8U412	8 output M12	1
TFP060	2 module supports 6 mm VDMA 18-26	4

Electric connection with external connector side 18 mm

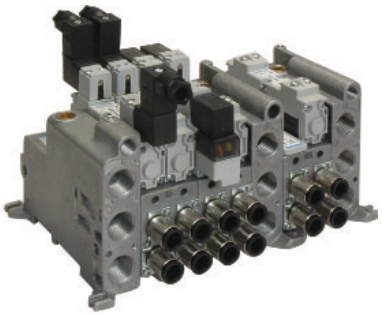

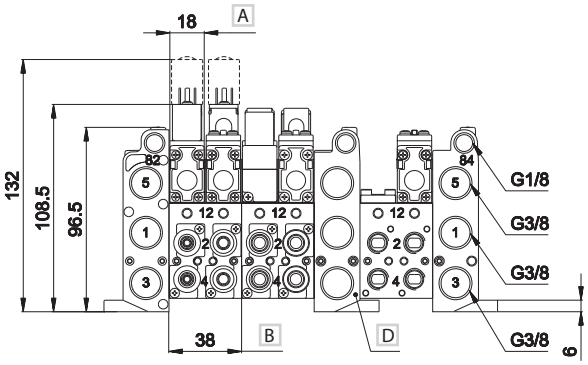

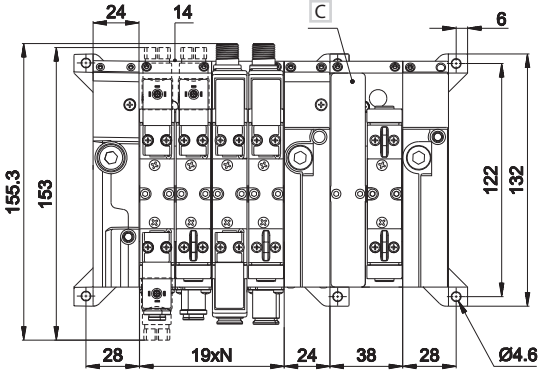

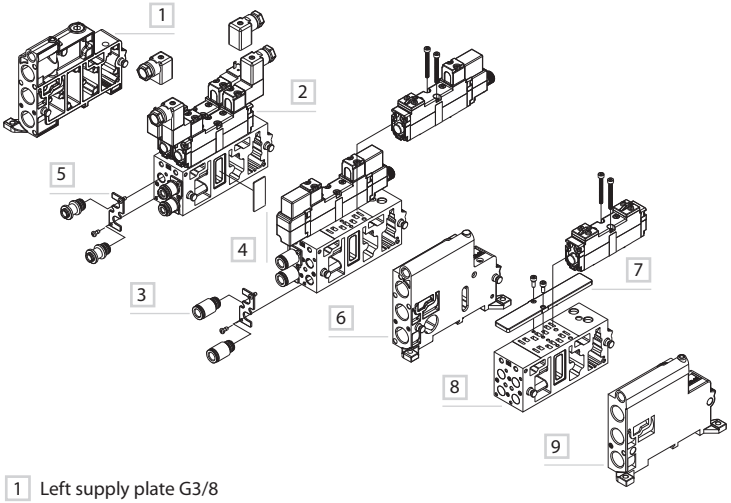

A Valve thickness
B Sub-base 2 places valve
C Closing plate for unused valve place BDF-3185
D Intermediate supply plate

1 = Supply port
2 - 4 = Use
3 - 5 = Exhaust
14 = Control
12 = Return

N = Number of valve places

1 Left supply plate G3/8
2 Solenoid valve
3 Straight fittings
4 Plate for separating pressures
5 Fixing plate for fittings
6 Intermediate supply plate G3/8
7 Closing plate
8 Sub-base 2 valve places
9 Right supply plate G3/8

BDF-3110	BDF-3115	BDF-3125	BDF-3180	BDF-3185	BDF-3191	BDF-3400
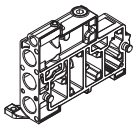	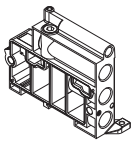	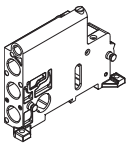		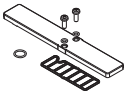	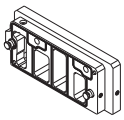	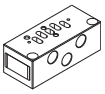
left supply plate G3/8 weight: 0,288 Kg	right supply plate G3/8 weight: 0,276 Kg	intermediate supply plate G3/8 without integrated electric connection weight: 0,31 Kg	plate for separating pressures weight: 0,002 Kg	plate for closing unused valve place weight: 0,038 Kg	interface for connecting valves side 18-26 mm with integrated electric connection weight: 0,212 Kg	single sub-base 1 place with increased capacity G1/8 connections weight: 0,12 Kg

BDF-3210/1/2 (b)	BDF-3230/1/2 (a) - (b)	BDF-3310/1/2 (b)	BDF-3330/1/2 (a) - (b)	GZR-100	GZR-V10004/6/8	DD-051/..
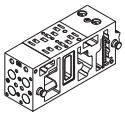	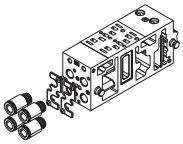	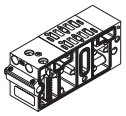	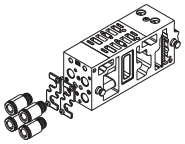			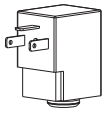
sub base 2 places according to VDMA-ISO specifications flow rate 620 Nl/min G1/8 connections **BDF-3210** **BDF-3211** **BDF-3212** weight: 0,316 Kg	sub base 2 places according to VDMA-ISO specifications flow rate 620 Nl/min for fittings Ø 4-6-8 mm **BDF-3230** **BDF-3231** **BDF-3232** weight: 0,326 Kg	sub base 2 places with increased capacity 800 Nl/min attacchi G1/8 **BDF-3310** **BDF-3311** **BDF-3312** weight: 0,316 Kg	sub base 2 places with increased capacity flow rate 800 Nl/min for fittings Ø 4-6-8 mm **BDF-3330** **BDF-3331** **BDF-3332** weight: 0,326 Kg	screw plug weight: 0,01 Kg	fittings according to UNIVER design (package 50 pcs.) **GZR-V10004** Ø4 mm **GZR-V10006** Ø6 mm **GZR-V10008** Ø8 mm weight: 0,01 Kg cad.	U05 coil side15 mm (for technical features refer to section **"Accessories>Coils"**) weight: 0,019 Kg

(a) = sub-base including fixing plates for fittings (fittings excluded)
(b) = part no. codification: **0 = electric integrated** **1 = electric non integrated** **2 =only pneumatic**

Subject to change

Electric connection with external connector side 26 mm

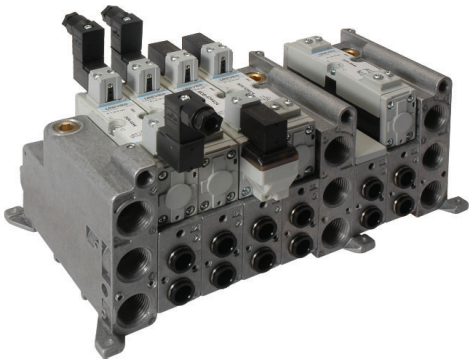

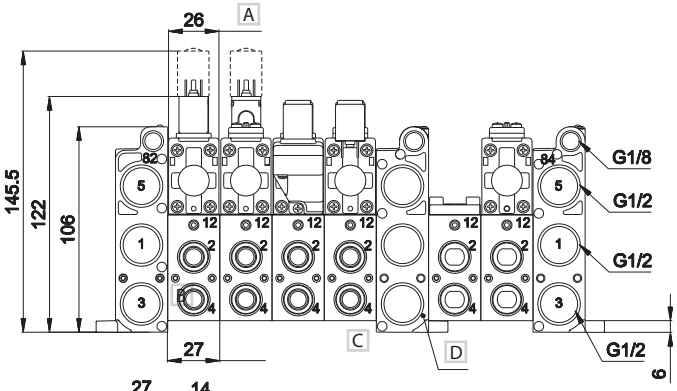

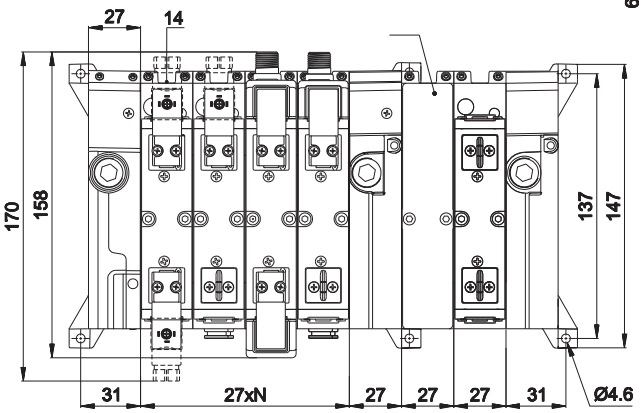

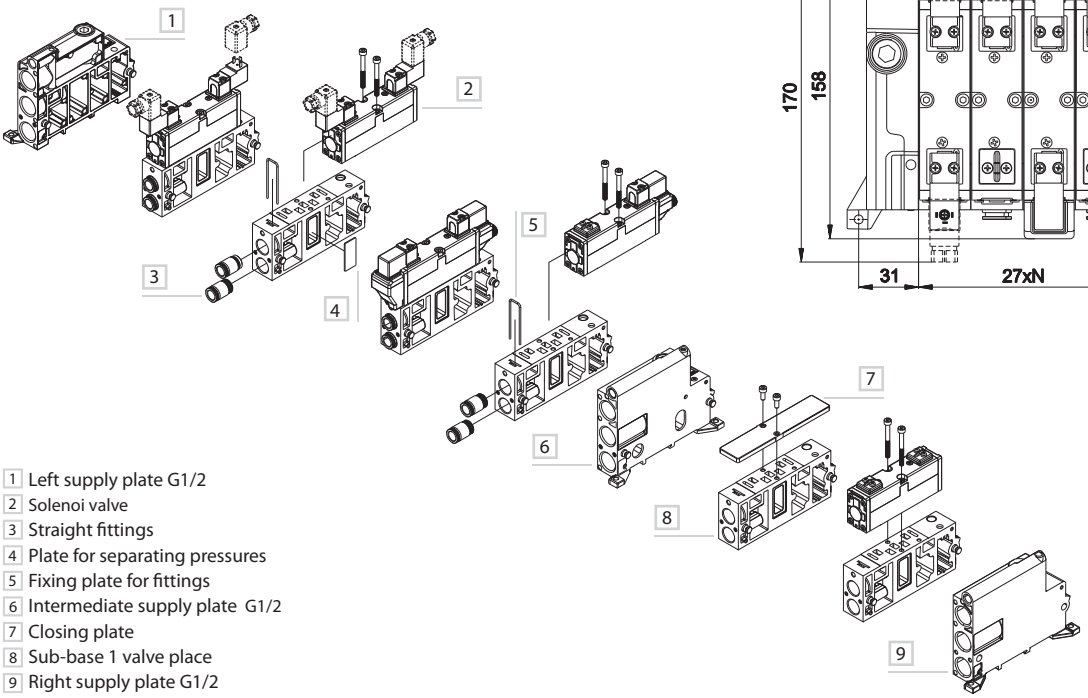

A Valve thickness
B Sub-base 1 places valve
C Closing plate for unused valve place BDF-4185
D Intermediate supply plate

1 = Supply port
2 - 4 = Use
3 - 5 = Exhaust
14 = Control
12 = Return

N = Number of valve places

1 Left supply plate G1/2
2 Solenoi valve
3 Straight fittings
4 Plate for separating pressures
5 Fixing plate for fittings
6 Intermediate supply plate G1/2
7 Closing plate
8 Sub-base 1 valve place
9 Right supply plate G1/2

BDF-4110	BDF-4115	BDF-4125	BDF-4180	BDF-4185	BDF-4400
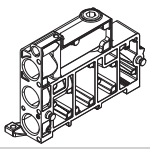	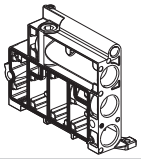	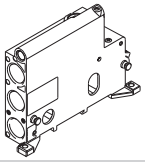		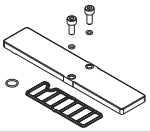	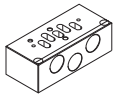
left supply plate G1/2 weight: 0,428 Kg	right supply plate G1/2 weight: 0,418 Kg	intermediate supply plate G1/2 without integrated electric connection weight: 0,42 Kg	plate for separating supply pressures weight: 0,002 Kg	plate for closing unused valve place weight: 0,08 Kg	single sub-base 1 place with increased capacity G3/8 connections weight: 0,226 Kg

BDF-4210/.. (b)	BDF-4230/1/2 (a) - (b)	BDF-4311/.. (b)	BDF-4330/1/2 (a) - (b)	GZR-VV1006/8/10	DD-051/..
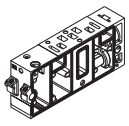	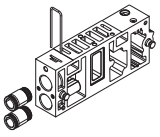	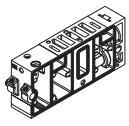	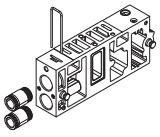		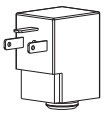
sub base 1 place according to VDMA-ISO specification flow rate 1250 Nl/min G1/4 connect. G3/8 connect. **BDF-4210** **BDF-4220** **BDF-4211** **BDF-4221** **BDF-4212** **BDF-4222** weight: 0,244 Kg weight: 0,236 Kg	sub base 1 place according to VDMA-ISO specification flow rate 1250 Nl/min for fittings Ø 6-8-10 mm **BDF-4230** **BDF-4231** **BDF-4232** weight: 0,22 Kg	sub base 1 place with increased capacity 1700 Nl/min G1/4 connect. G3/8 connect. **BDF-4310** **BDF-4320** **BDF-4311** **BDF-4321** **BDF-4312** **BDF-4322** weight: 0,244 Kg weight: 0,236 Kg	sub base 1 place with increased capacity 1700 Nl/min for fittings Ø 6-8-10 mm **BDF-4330** **BDF-4331** **BDF-4332** weight: 0,22 Kg	fittings according to UNIVER design (package 50 pcs.) **GZR-VV1006** Ø 6mm **GZR-VV1008** Ø 8mm **GZR-VV1010** Ø 10mm weight: 0,014 Kg cad.	U05 coil side 15 mm (for technical features refer to section **"Accessories>Coils"**) weight: 0,019 Kg

(a) = sub-base including fixing plates for fittings (fittings excluded)
(b) = part no. codification: **0 = electric integrated** **1 =electric non integrated** **2 = only pneumatic**

Electric connection

AM-5109

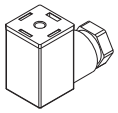

- 15 mm connector

TSCFN24S000

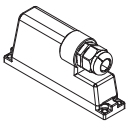

- famale connector
  25 poles type D-sub
  no cable
  M3 x 8 fixing screws

TSCFN24S0300
TSCFN24S0500
TSCFN24S1000

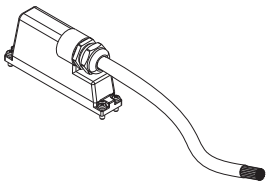

- famale connector
  25 poles type D-sub
  cable 3-5-10 m
  M3 x 8 fixing screws

TSCFN16D0300
TSCFN16D0500
TSCFN16D1000

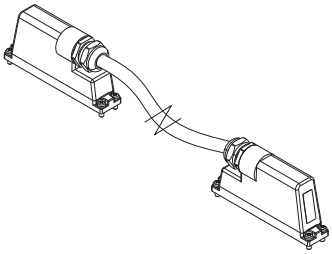

- male/famale flying connector
  sub D (upon request)
  prewired for 24 coils with
  cable Ø 8 mm (3-5-10 m lenght)
  suitable for mobile laying
  M3 x 8 fixing screws

Female connector **D-SUB 25 poles**
for connection **12+12 coils**

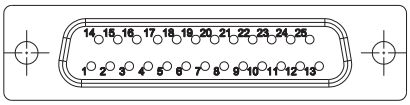

PIN No.	Control side	Valve N°	Colour	Coil
1	14	1	white	1
2	12	1	brown	2
3	14	2	green	3
4	12	2	yellow	4
5	14	3	grey	5
6	12	3	pink	6
7	14	4	blue	7
8	12	4	red	8
9	14	5	black	9
10	12	5	violet	10
11	14	6	grey-pink	11
12	12	6	red-blue	12
13	14	7	white-green	13
14	12	7	green-brown	14
15	14	8	white-yellow	15
16	12	8	yellow-brown	16
17	14	9	white-grey	17
18	12	9	grey-brown	18
19	14	10	white-pink	19
20	12	10	pink-brown	20
21	14	11	white-blue	21
22	12	11	brown-blue	22
23	14	12	white-red	23
24	-	-	brown-red	common
25	12	12	white-black	24

BDF-3140 TIM

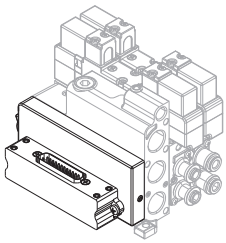

- multiway connection module
  25 poles male type D
  side 18 mm

BDF-4140 TIM

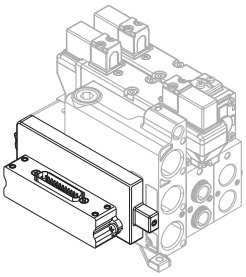

- multiway connection module
  25 poles male type D
  side 26 mm

COMMUNICATION SYSTEMS

Possibility to configure manifolds with serial communication systems

CANopen PROFINET PROFIBUS DeviceNet EtherNet/IP EtherCAT IO-Link

AC-N

NAMUR valve

- Mixed commutation system (spool-poppet)
- High flow rate
- Quick response time
- High cycle rates
- Control: pneumatic, electric
- Suitable for rotating pneumatic actuators used in industrial plants for the distribution of fluids
- NAMUR VDI/VDE 3845 interface

Available ATEX version upon request

II 2Gc IIC T5 II 2Dc T100°C

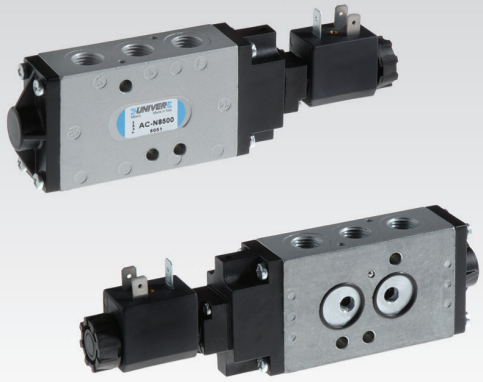

TECHNICAL CHARACTERISTICS

Ambient temperature	-10 ÷ 45 °C
Fluid temperature	-10 ÷ 50 °C
Fluid	50 µm filtered air, with or without lubrication
Commutation system	poppet mixed
Ways/Positions	**5/2 (3/2*)**
Pressure	10 bar max
Control	pneumatic, electric
Return	pneumomechanical spring, pneumatic, electric
Connections	**1-3-5:** G1/4 **2-4:** NAMUR interface
Nominal Ø	8 mm
Nominal flow rate	1200 Nl/min

CONSTRUCTIVE CHARACTERISTICS

Valve body	zamak
Seals	nitrile rubber, polyurethane
Actuators	technopolymer
Spool	aluminium

ELECTRIC CHARACTERISTICS

Electropilot	AA series
Coil	U1-U3
Power consumption	3,5 W (DC) - 5 VA (AC)
Connector	AM-5110
Voltage	12 V DC - 24 V DC - 24 V AC - 110 V AC - 230 V AC
Manual override	impulse screw - 2 positions

* = This can be achieved with isolating disc, standard supplied

NAMUR interface

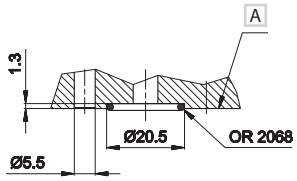

A-A' section

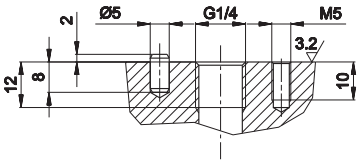

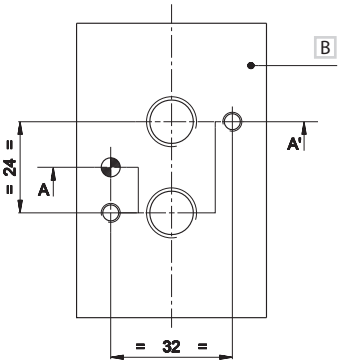

A Electrovalve surface
B Flange surface

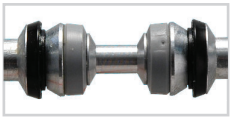

MIXED
for heavy applications

SPOOL
for all applications

ATEX

Upon request:
Components suitable for use in potentially explosive environments.
Group II Zona 2G e 22D

Single **pneumatic** impulse

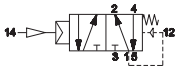

A ISO 4762

1 = Supply port
2 - 4 = Use
3 - 5 = Exhaust
14 = Control
12 = Return

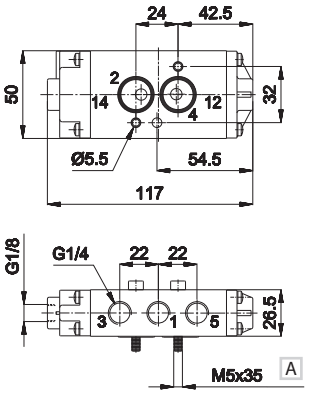

	Control	Return	Pressure	Response. Time (ms)		Weight	Part no.
	14	12	bar	En.	De-en.	Kg	
5/2	pneumatic amplified	pneumo mechanical spring	2,3÷10	10	10	0,564	**AC-N8100**

Double **pneumatic** impulse

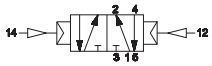

A ISO 4762

1 = Supply port
2 - 4 = Use
3 - 5 = Exhaust
14 = Control
12 = Return

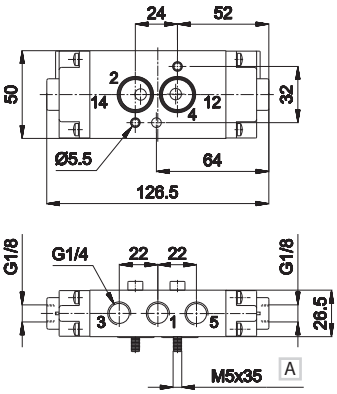

	Control	Return	Pressure	Response. Time (ms)		Weight	Part no.
	14	12	bar	En.	De-en.	Kg	
5/2	pneumatic amplified	pneumatic amplified	0,8÷10	6	6	0,564	**AC-N8120**

Single **electric** impulse

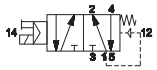

A ISO 4762
B Manual override

1 = Supply port
2 - 4 = Use
3 - 5 = Exhaust
14 = Control
12 = Return

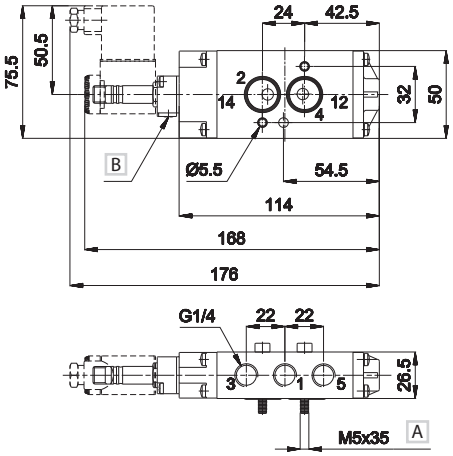

	Control	Return	Pressure	Response. Time (ms)		Weight	Part no.
	14	12	bar	En.	De-en.	Kg	
5/2	electric amplified	pneumo mechanical spring	2,3÷10	22	22	0,6	**AC-N8500**

Double **electric** impulse

A ISO 4762
B Manual override

1 = Supply port
2 - 4 = Use
3 - 5 = Exhaust
14 = Control
12 = Return

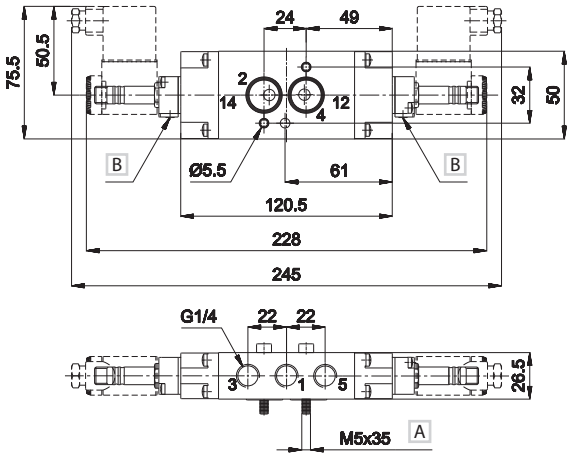

	Control	Return	Pressure	Response. Time (ms)		Weight	Part no.
	14	12	bar	En.	De-en.	Kg	
5/2	electric amplified	electric amplified	0,8÷10	14	14	0,636	**AC-N8520**

Version 3/2: valves are supplied with proper fl at plug for closing unused way.
Solenoid valves are supplied without coil / connector / locking nut.

Subject to change

CL-CM

UNIVERSAL Valves G1/8 - G1/4

- UNIVERSAL Modular System: possibility to create a lot of different valves with short number of basis elements
- Control: manual, mechanical, pneumatic, electric
- Traditional UNIVER spool system: fluctuating seals of special compount to reduce frinction and prevent sticking
- High flow rate, high cycle life, suitable for vacuum application
- Modular sub-bases

Available ATEX version upon request

II 2Gc IIC T5 II 2Dc T100°C

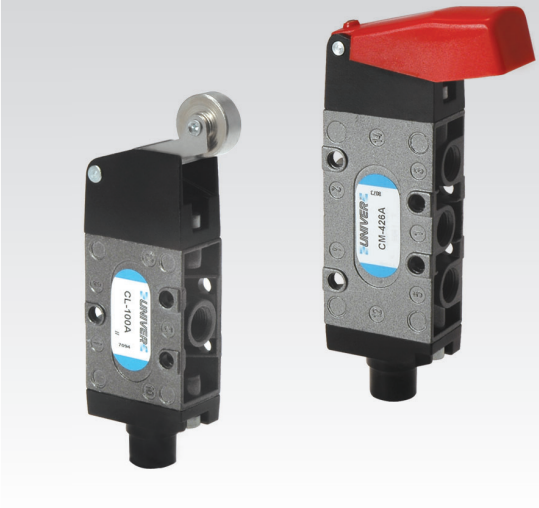

TECHNICAL CHARACTERISTICS

Ambient temperature	-10 ÷ +50 °C	
Fluid temperature	Max +50 °C	
Fluid	50 µm filtered air, with or without lubrication	
Commutation system	spool	
Ways/Positions	**3/2 NC, 3/2 NO, 3/2 NC-NO, 5/2, 5/3**	
Pressure	max 10 bar	
Control	indirect electro-pneumatic, pneumatic, manual, mechanical	
Return	pneumatic spring, mechanical spring	
Connections	**G1/8**	**G1/4**
Nominal Ø mm	6,5	8,5
Nominal flow rate (Nl/min)	890	1480

CONSTRUCTIVE CHARACTERISTICS

Valve body	**G1/8** = die-cast zamak
	G1/4 = aluminium
Seals	nitrile rubber
Actuators	technopolymer/aluminium
Spool	aluminium
Sub-base	zamak

ELECTRIC CHARACTERISTICS

Electropilot	AA
Coil	U1-U3
Power consumption	3,5 W (DC) - 5 VA (AC)
Connector	AM 5110
Voltage	12 V DC - 24 V DC - 24 V AC - 110 V AC - 230 V AC
Manual override	impulse screw - 2 positions

See ATEX Catalogue for types and versions

Flow rate characteristics

>> G1/8

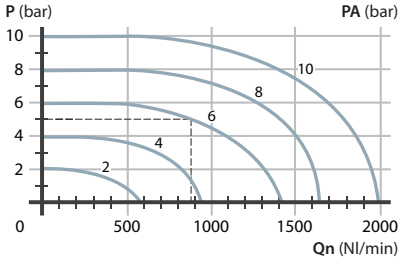

>> G1/4

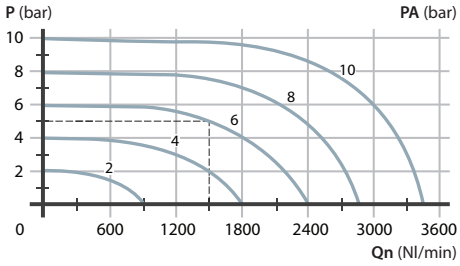

P = Working pressure
PA = Supply pressure
Qn = Flow rate

Modular system UNIVERSAL series

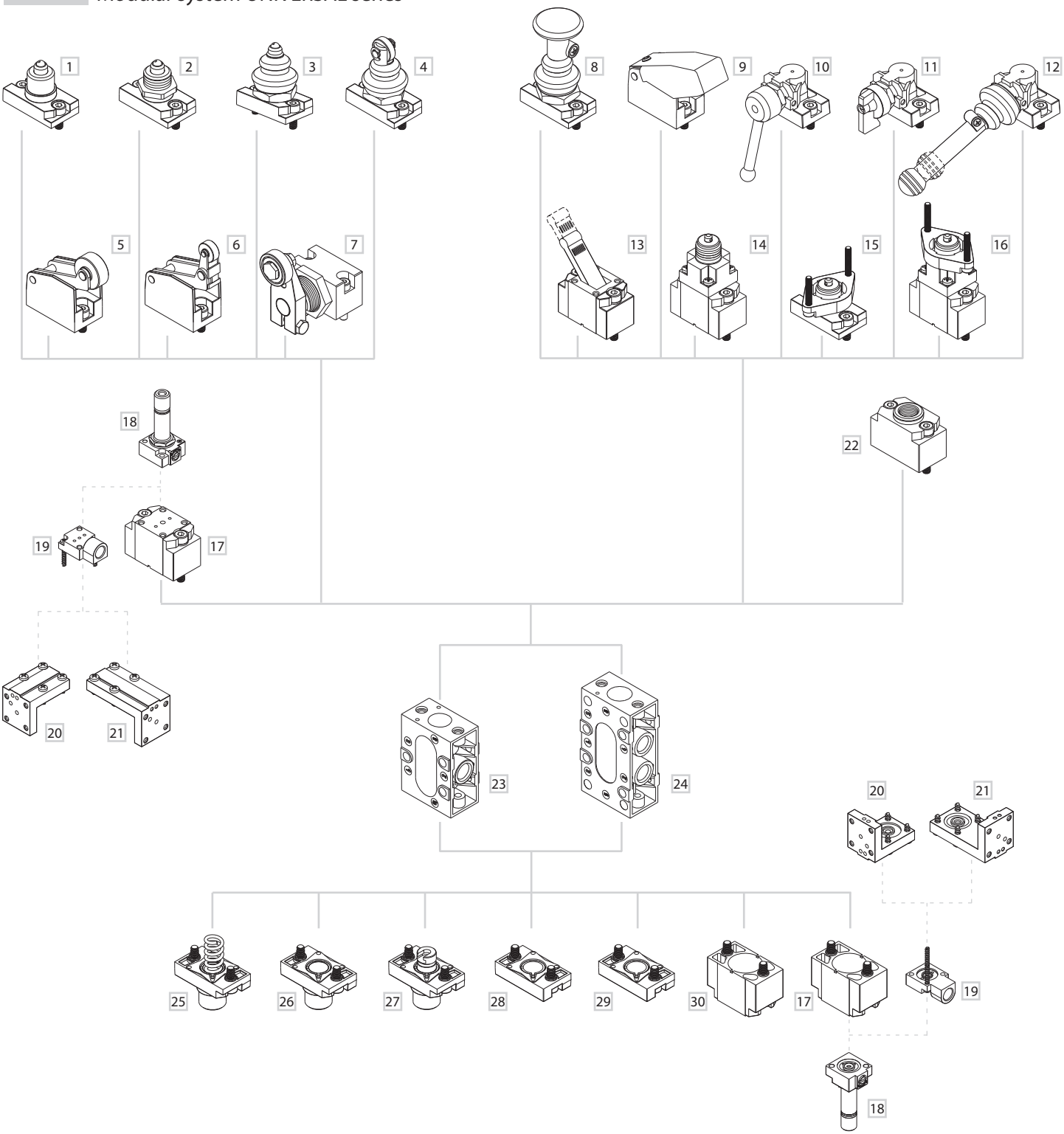

MECHANICAL CONTROL
- 1 Ball-push
- 2 Ball-push for screw panel mounting
- 3 Ball-push with dust protection
- 4 Roller with dust protection
- 5 Roller lever
- 6 Uni-directional roller lever
- 7 Bidirectional side roller lever

MANUAL CONTROL
- 8 Push-pull
- 9 Push
- 10 Rotating lever
- 11 Selector
- 12 90° short/long lever
- 13 Short/long lever
- 14 Threaded indirect operation
- 15 Direction operation for panel mounting
- 16 Indirect control for panel mounting

ELECTRIC CONTROL
- 17 Electric amplified
- 18 U1 electropilot
- 19 Plate for external servoassistance
- 20 "H" option angle plate
- 21 "P" option angle plate

PNEUMATIC CONTROL
- 22 Pneumatic amplified

BODY
- 23 3/2 body
- 24 5/2 body

RETURN
- 25 Mechanical spring
- 26 Pneumatic not amplified
- 27 2/3 positions plate
- 28 Bottom plate
- 29 Pneumatic spring
- 30 Pneumatic amplified

Subject to change

Modular system actuators/buttons

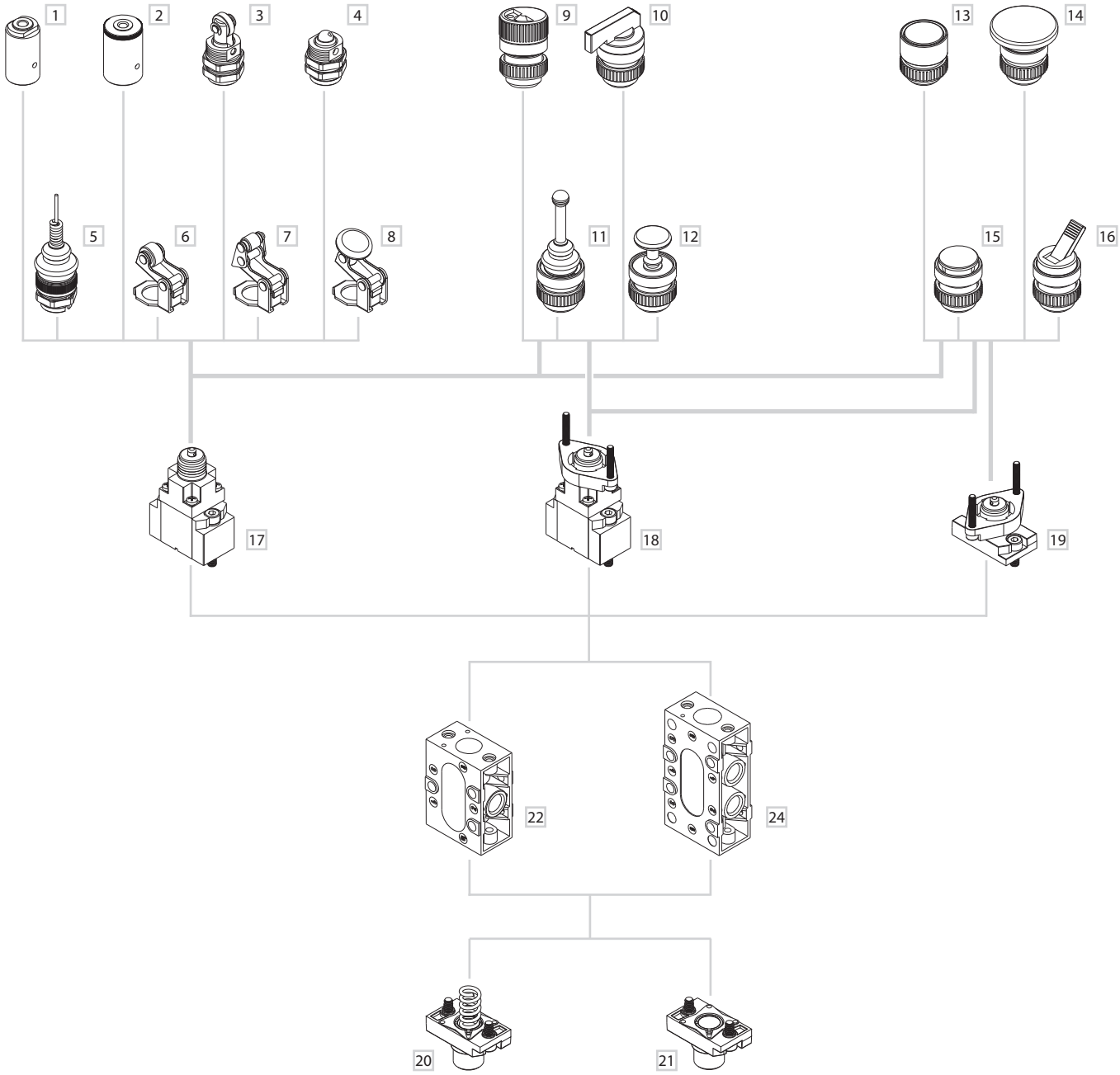

PNAUMATIC/MACHANICAL ACTUATORS

1 Pneumatic actuators
2 Pneumatic actuators amplified
3 Roller operator 1 posiotion
4 Ball operator 1 position
5 Operator with omni-directional antenna 1 position
6 Roller lever operator 1 position
7 Articulated roller lever operator 1 position
8 Key operator 1 position

MANUAL PUSH

9 Rotating selector
10 Rotating lever selector
11 Omni-directional lever
12 Push pull actuators
13 Recessed button
14 Head button
15 Button
16 Lever operator

OVERRIDE

17 Threaded indirect operation
18 Indirect operation for panel mounting
19 Direct operation for panel mounting

BODY

22 3/2 Body
24 5/2 Body

RETURN

20 Mechanical spring
21 Pneumatic not amplified

G1/8 Valves with direct mechanical operation

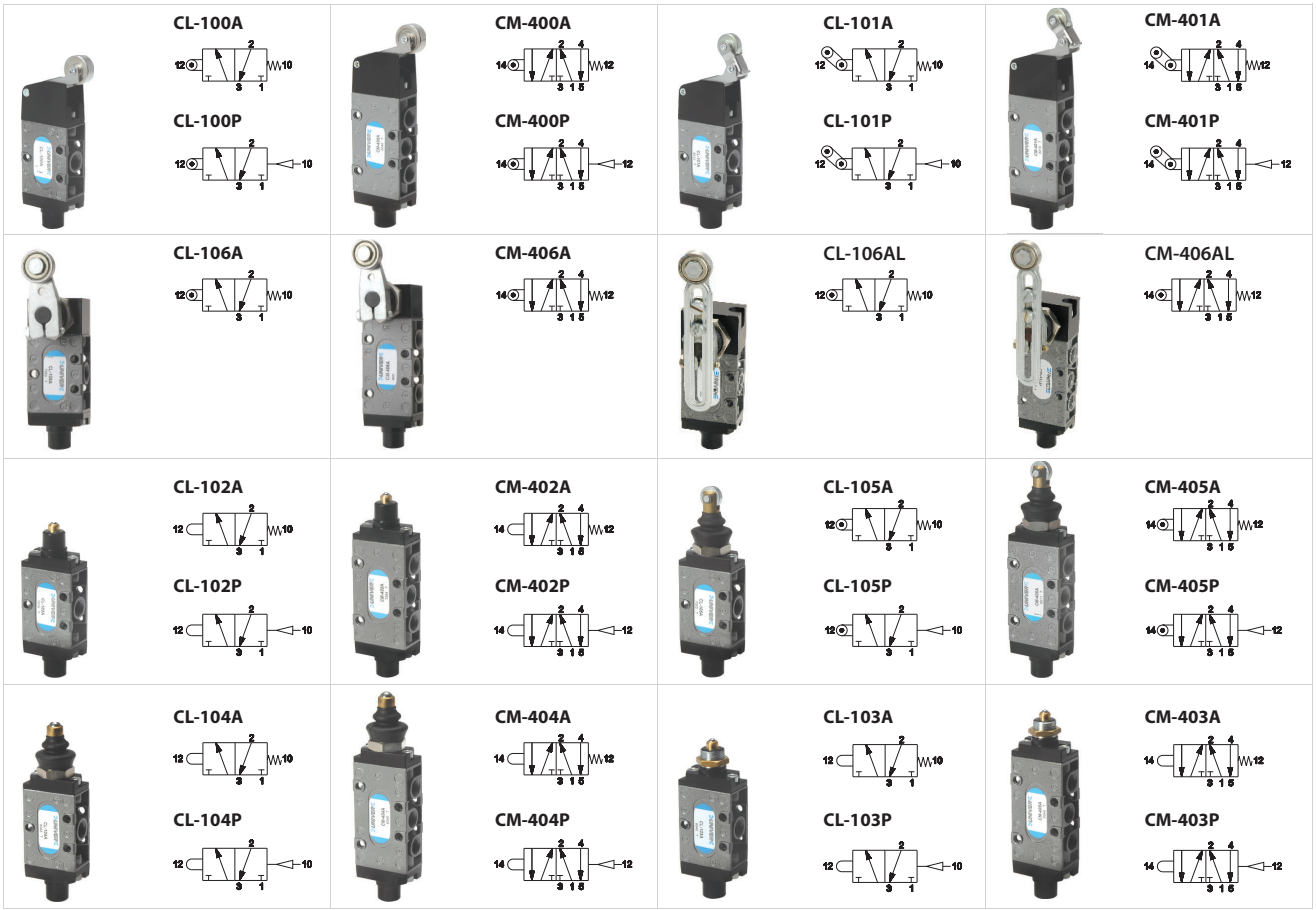

3

	Return	Flow rate (Nl/min)	Ø mm	Weight Kg	Force N	Part no.	Composition (a) Control	Body	Return	Tot L. mm
	ROLLER LEVER									
3/2 NC-NO	mechanical spring	890	6,5	0,21	23	**CL-100A**	A	1	I	112
	pneumatic not amplified	890	6,5	0,21	6	**CL-100P**	A	1	L	112
5/2	mechanical spring	890	6,5	0,25	23	**CM-400A**	A	2	I	129
	pneumatic not amplified	890	6,5	0,25	6	**CM-400P**	A	2	L	129
	ONE-WAY ROLLER LEVER									
3/2 NC-NO	mechanical spring	890	6,5	0,22	18	**CL-101A**	B	1	I	123
	pneumatic not amplified	890	6,5	0,22	6	**CL-101P**	B	1	L	123
5/2	mechanical spring	890	6,5	0,26	18	**CM-401A**	B	2	I	139,5
	pneumatic not amplified	890	6,5	0,26	6	**CM-401P**	B	2	L	139,5
	TWO-WAY SIDE ROLLER LEVER									
3/2 NC-NO	mechanical spring	890	6,5	0,30	25	**CL-106A**	C	1	I	118,5
5/2	mechanical spring	890	6,5	0,34	25	**CM-406A**	C	2	I	135
	ADJUSTABLE TWO-WAY SIDE ROLLER LEVER									
3/2 NC-NO	mechanical spring	890	6,5	0,30	25	**CL-106AL**	D	1	I	123÷175
5/2	mechanical spring	890	6,5	0,34	25	**CM-406AL**	D	2	I	139,5÷191,5
	BALL-PUSH									
3/2 NC-NO	mechanical spring	890	6,5	0,19	64	**CL-102A**	E	1	I	97,7
	pneumatic not amplified	890	6,5	0,19	25	**CL-102P**	E	1	L	97,7
5/2	mechanical spring	890	6,5	0,23	64	**CM-402A**	E	2	I	114,2
	pneumatic not amplified	890	6,5	0,23	25	**CM-402P**	E	2	L	114,2
	ROLLER WITH DUST PROTECTION									
3/2 NC-NO	mechanical spring	890	6,5	0,19	64	**CL-105A**	F	1	I	117
	pneumatic not amplified	890	6,5	0,18	25	**CL-105P**	F	1	L	117
5/2	mechanical spring	890	6,5	0,23	68	**CM-405A**	F	2	I	133,5
	pneumatic not amplified	890	6,5	0,22	26	**CM-405P**	F	2	L	133,5
	BALL-PUSH WITH DUST PROTECTION									
3/2 NC-NO	mechanical spring	890	6,5	0,19	64	**CL-104A**	G	1	I	110
	pneumatic not amplified	890	6,5	0,18	25	**CL-104P**	G	1	L	110
5/2	mechanical spring	890	6,5	0,23	68	**CM-404A**	G	2	I	126,5
	pneumatic not amplified	890	6,5	0,22	26	**CM-404P**	G	2	L	126,5
	BALL-PUSH FOR SCREW PANEL MOUNTING									
3/2 NC-NO	mechanical spring	890	6,5	0,19	64	**CL-103A**	H	1	I	97,7
	pneumatic not amplified	890	6,5	0,18	25	**CL-103P**	H	1	L	97,7
5/2	mechanical spring	890	6,5	0,23	68	**CM-403A**	H	2	I	114,2
	pneumatic not amplified	890	6,5	0,22	25	**CM-403P**	H	2	L	114,2

To get 3/2 NO version, supply the valve from port 3
Pressure 0 ÷10 bar for all part numbers

(a) = see page **3**_7

Subject to change

Composition

CONTROL	BODY	RETURN

A G1/8 ROLLER LEVER

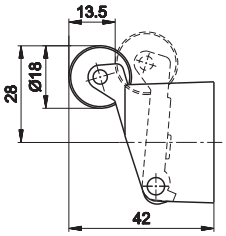

B G1/8 UNI-DIRECTIONAL ROLLER LEVER

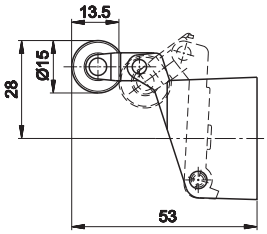

C G1/8 BIDIRECTIONAL SIDE ROLLER LEVER

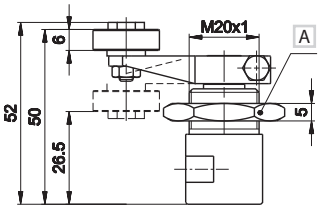

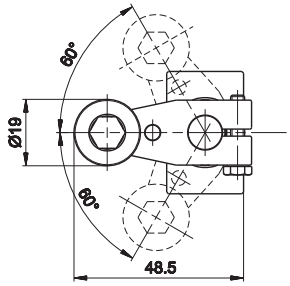

A Wrench 25

D ADJUSTABLE BIDIRECTIONAL SIDE ROLLER LEVER G1/8

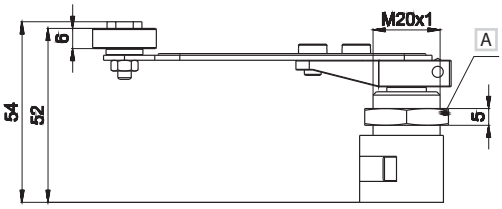

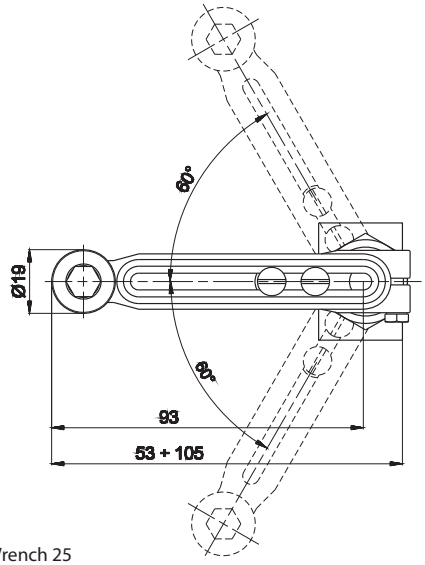

A Wrench 25

1 3/2 NC-NO G1/8

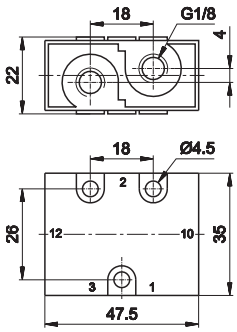

>> NC	>> NO
1 = Supply port	1 = Exhaust
2 = Use	2 = Use
3 = Exhaust	3 = Supply port
12 = Control	12 = Control
10 = Return	10 = Return

2 5/2 G1/8

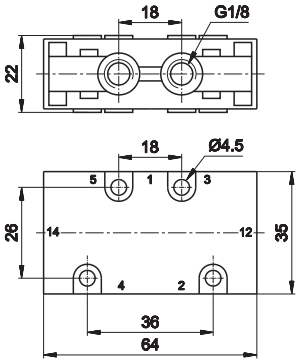

1 = Supply port
2 - 4 = Use
3 - 5 = Exhaust
14 = Control
12 = Return

I G1/8 MECHANICAL SPRING

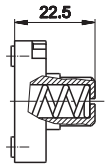

L G1/8 PNEUMATIC NOT AMPLIFIED

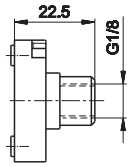

3

VALVES

Composition

CONTROL	BODY	RETURN

E G1/8 BALL-PUSH

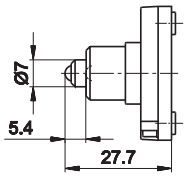

F G1/8 ROLLER WITH DUST PROTECTION

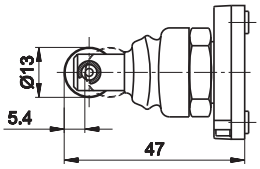

G G1/8 BALL-PUSH WITH DUST PROTECTION

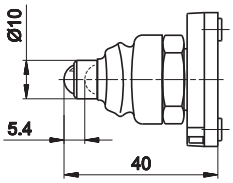

H G1/8 BALL-PUSH FOR SCREW PANEL MOUNTING

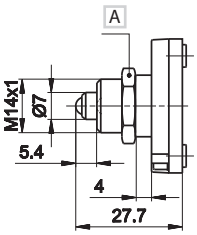

A Wrench18

1 3/2 NC-NO G1/8

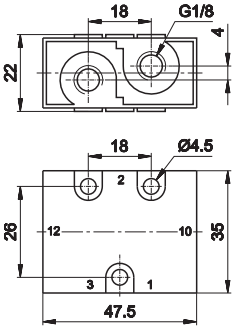

>> NC	>> NO
1 = Supply port	1 = Exhaust
2 = Use	2 = Use
3 = Exhaust	3 = Supply port
12 = Control	12 = Control
10 = Return	10 = Return

2 5/2 G1/8

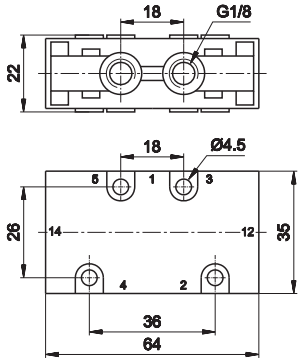

1 = Supply port
2 - 4 = Use
3 - 5 = Exhaust
14 = Control
12 = Return

I G1/8 MECHANICAL SPRING

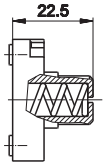

L G1/8 PNEUMATIC NOT AMPLIFIED

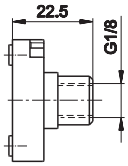

G1/4 Valves with direct mechanical operation

CL-9102A

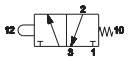

CL-9102P

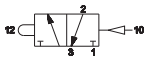

CM-9402A

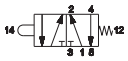

CM-9402P

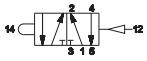

CL-9103A

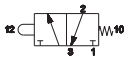

CL-9103P

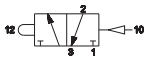

CM-9403A

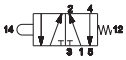

CM-9403P

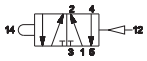

	Return	Flow rate (Nl/min)	Ø mm	Weight Kg	Force N	Part no.	Composition [a] Control	Body	Return	Tot L. mm
	BALL-PUSH									
3/2 NC-NO	mechanical spring	1480	8,5	0,26	68	**CL-9102A**	D	1	H	117
	pneumatic not amplified	1480	8,5	0,26	26	**CL-9102P**	D	1	I	106
5/2	mechanical spring	1480	8,5	0,28	68	**CM-9402A**	D	2	H	134,5
	pneumatic not amplified	1480	8,5	0,28	26	**CM-9402P**	D	2	I	123,5
	BALL-PUSH FOR SCREW PANEL MOUNTING									
3/2 NC-NO	mechanical spring	1480	8,5	0,26	68	**CL-9103A**	G	1	H	117
	pneumatic not amplified	1480	8,5	0,24	26	**CL-9103P**	G	1	I	106
5/2	mechanical spring	1480	8,5	0,28	64	**CM-9403A**	G	2	H	134,5
	pneumatic not amplified	1480	8,5	0,26	26	**CM-9403P**	G	2	I	123,5

To get 3/2 NO version, supply the valve from port 3
Pressure 0 ÷10 bar for all part numbers

(a) = see page 8

Composition

CONTROL	BODY	RETURN

1 3/2 NC-NO G1/4

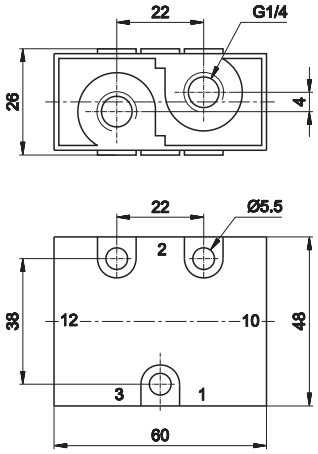

>> NC	>> NO
1 = Supply port	1 = Exhaust
2 = Use	2 = Use
3 = Exhaust	3 = Supply port
12 = Control	12 = Control
10 = Return	10 = Return

D G1/4 BALL-PUSH

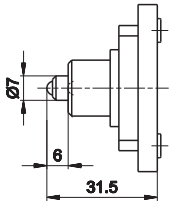

G G1/4 BALL-PUSH FOR SCREW PANEL MOUNTING

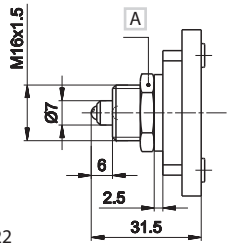

A Wrench 22

2 5/2 G1/4

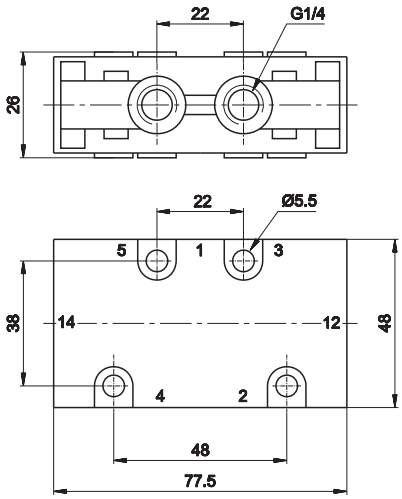

1 = Supply port
2 - 4 = Use
3 - 5 = Exhaust
14 = Control
12 = Return

H G1/4 MECHANICAL SPRING

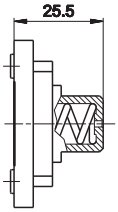

I G1/4 PNEUMATIC SPRING

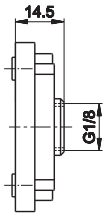

3

Subject to change

G1/8 - G1/4 Valves with indirect mechanical operator for pneumatic and mechanical actuators

CL-110A
CL-9110A

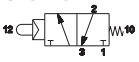

CL-110P
CL-9110P

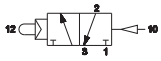

CM-410A
CM-9410A

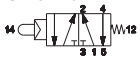

CM-410P
CM-9410P

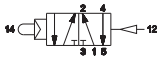

CL-111A
CL-9111A

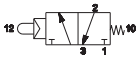

CL-111P
CL-9111B

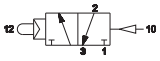

CM-411A
CM-9411A

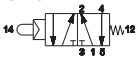

CM-411P
CM-9411P

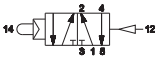

	Thread	Return	Pressure bar	Flow rate (Nl/min)	Ø mm	Weight Kg	Force N	Part no.
	BALL-PUSH							
3/2 NC	G1/8	mechanical spring	2,5÷10	890	6,5	0,19	11	**CL-110A**
	G1/8	pneumatic not amplified	1÷10	890	6,5	0,18	11	**CL-110P**
	G1/4	mechanical spring	2÷10	1480	8,5	0,26	11	**CL-9110A**
	G1/4	pneumatic not amplified	1÷10	1480	8,5	0,24	11	**CL-9110P**
5/2	G1/8	mechanical spring	3÷10	890	6,5	0,23	11	**CM-410A**
	G1/8	pneumatic not amplified	1,2÷10	890	6,5	0,22	11	**CM-410P**
	G1/4	mechanical spring	2÷10	1480	8,5	0,28	11	**CM-9410A**
	G1/4	pneumatic not amplified	1,2÷10	1480	8,5	0,26	11	**CM-9410P**
	SENSITIVE BALL-PUSH							
3/2 NC	G1/8	mechanical spring	2,5÷10	890	6,5	0,19	3	**CL-111A**
	G1/8	pneumatic not amplified	1÷10	890	6,5	0,18	3	**CL-111P**
	G1/4	mechanical spring	2÷10	1480	8,5	0,26	3	**CL-9111A**
	G1/4	pneumatic not amplified	1÷10	1480	8,5	0,24	3	**CL-9111P**
5/2	G1/8	mechanical spring	3÷10	890	6,5	0,23	3	**CM-411A**
	G1/8	pneumatic not amplified	1,2÷10	890	6,5	0,22	3	**CM-411P**
	G1/4	mechanical spring	2÷10	1480	8,5	0,28	3	**CM-9411A**
	G1/4	pneumatic not amplified	1,2÷10	1480	8,5	0,26	3	**CM-9411P**

3/2 NC G1/8 - G1/4

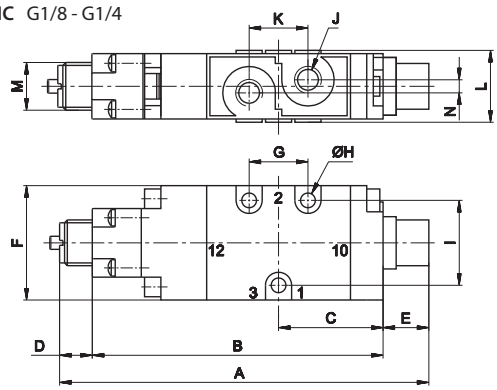

1 = Supply port
2 = Use
3 = Exhaust
12 = Control
10 = Return

	A	B	C	D	E	F	G	H	I	J	K	L	M	N
G1/8	116	92	32	10	14	35	18	4,5	26	G1/8	18	22	M14x1	4
G1/4	136,5	112	41	10	14,5	48	22	5,5	38	G1/4	22	26	M14x1	4

5/2 G1/8 - G1/4

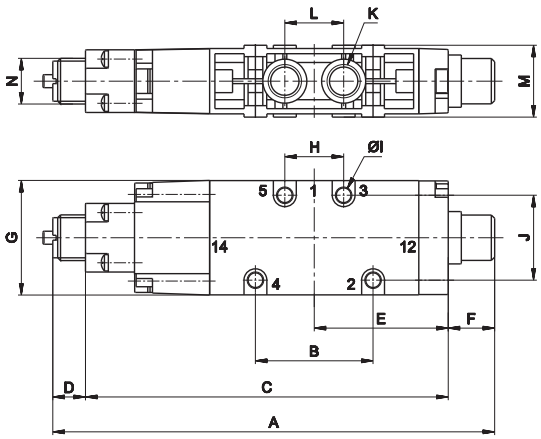

1 = Supply port
2 - 4 = Use
3 - 5 = Exhaust
14 = Control
12 = Return

	A	B	C	D	E	F	G	H	I	J	K	L	M	N
G1/8	135	36	111	10	41	14	35	18	4,5	26	G1/8	18	22	M14x1
G1/4	154	48	129,5	10	49,7	14,5	48	22	5,5	38	G1/4	22	26	M14x1

G1/8 - G1/4 Valves with direct mechanical operator for pneumatic and mechanical actuators

PNEUMATIC AND MECHANICAL ACTUATORS

	Pneumatic operator	AI-3550
	Amplified pneumatic operator	AI-3551
	Roller operator 1 position	AI-3560
	Ball-push operator 1 position	AI-3562
	Operator with omni-directional antenna 1 position	AI-3563
	Roller lever operator 1 position	AI-3570
	Articulated roller operator 1 position Complete actuation with stroke 2,5 mm, max stroke 4,7 mm	AI-3571
	Key operator 1 position	AI-3572

MANUAL ACTUATORS

	Recessed button	BLACK RED GREEN	AI-3511 AI-3512 AI-3513
	Head button	RED BLACK RED BLACK	AI-3514 AI-3516 AI-3514D AI-3516D
	Button	GREEN RED BLACK	AI-3515 AI-3517 AI-3519
	Accident prevention rotating selector	BLACK BLACK	AI-3520 AI-3521
	Rotating lever selector	BLACK BLACK	AI-3522 AI-3523
	Lever operator	BLACK	AI-3524
	Omni-directional operator	BLACK	AI-3525
	Push-pull operator	BLACK	AI-3526

For actuators dimensions see section **"Accessories>Actuators"**

CL-112A

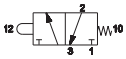

CL-112P

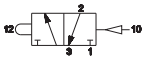

CM-412A

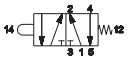

CM-412P

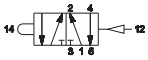

	Return	Pressure bar	Flow rate (Nl/min)	Ø mm	Weight Kg	Force N	Part no.
	BALL-PUSH						
3/2 NC-NO	mechanical spring	0÷10	890	6,5	0,19	64	**CL-112A**
	pneumatic not amplified	0÷10	890	6,5	0,18	25	**CL-112P**
5/2	mechanical spring	0÷10	890	6,5	0,23	64	**CM-412A**
	pneumatic not amplified	0÷10	890	6,5	0,22	25	**CM-412P**

To get 3/2 NO version supply the valve from port 3

	Recessed button	YELLOW RED GREEN	AI-3511Q AI-3512Q AI-3513Q
	Head button	RED BLACK	AI-3514Q AI-3516Q
	Button	GREEN RED BLACK	AI-3515Q AI-3517Q AI-3519Q
	Lever operator	BLACK	AI-3524Q

3/2 NC-NO G1/8

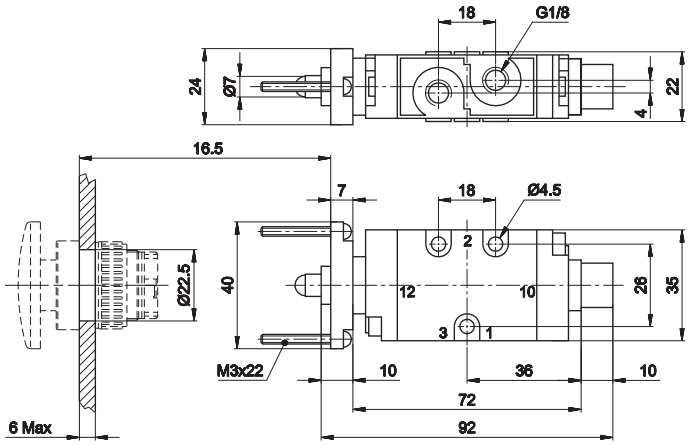

>> NC
1 = Supply port
2 = Use
3 = Exhaust
12 = Control
10 = Return

>> NO
1 = Exhaust
2 = Use
3 = Supply port
12 = Control
10 = Return

5/2 G1/8

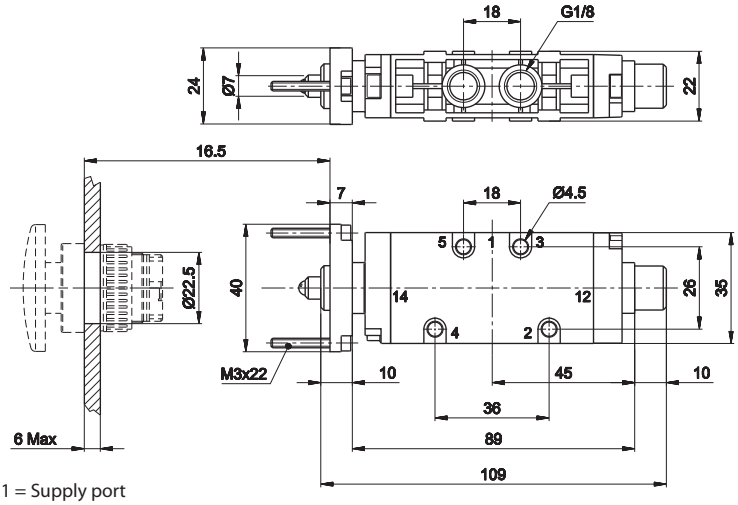

1 = Supply port
2 - 4 = Use
3 - 5 = Exhaust
14 = Control
12 = Return

For actuator dimensions see section **"Accessories>Buttons"**

G1/8 - G1/4 Valves with indirect operator for panel mounting actuators

CL-113A
CL-9113A

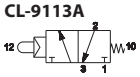

CL-113P
CL-9113P

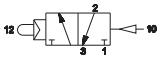

CM-413A
CM-9413A

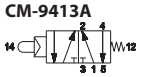

CM-413P
CM-9413P

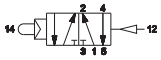

	Thread	Return	Pressure bar	Flow rate (Nl/min)	Ø mm	Weight Kg	Force N	Part no.
	BALL-PUSH							
3/2 NC	G1/8	mechanical spring	2,5÷10	890	6,5	0,20	11	**CL-113A**
	G1/8	pneumatic non amplified	1÷10	890	6,5	0,19	11	**CL-113P**
	G1/4	mechanical spring	2÷10	1480	8,5	0,27	11	**CL-9113A**
	G1/4	pneumatic non amplified	1÷10	1480	8,5	0,26	11	**CL-9113P**
5/2	G1/8	mechanical spring	3÷10	890	6,5	0,24	11	**CM-413A**
	G1/8	pneumatic non amplified	1,2÷10	890	6,5	0,23	11	**CM-413P**
	G1/4	mechanical spring	2÷10	1480	6,5	0,29	11	**CM-9413A**
	G1/4	pneumatic non amplified	1,2÷10	1480	6,5	0,28	11	**CM-9413P**

Recessed button

■BLACK AI-3511Q
■RED AI-3512Q
■GREEN AI-3513Q

Head button

■RED AI-3514Q
■BLACK AI-3516Q

■RED AI-3514QD
■BLACK AI-3516QD

Button

■GREEN AI-3515Q
■RED AI-3517Q
■BLACK AI-3519Q

Accident prevention rotating selector

■BLACK AI-3520Q

■BLACK AI-3521Q

Lever operator

■BLACK AI-3524Q

Rotating lever selector

■BLACK AI-3523Q

■BLACK AI-3522Q

Omni-directional lever

■BLACK AI-3525Q

Push-pull operator

■BLACK AI-3526Q

3/2 NC G1/8 - G1/4

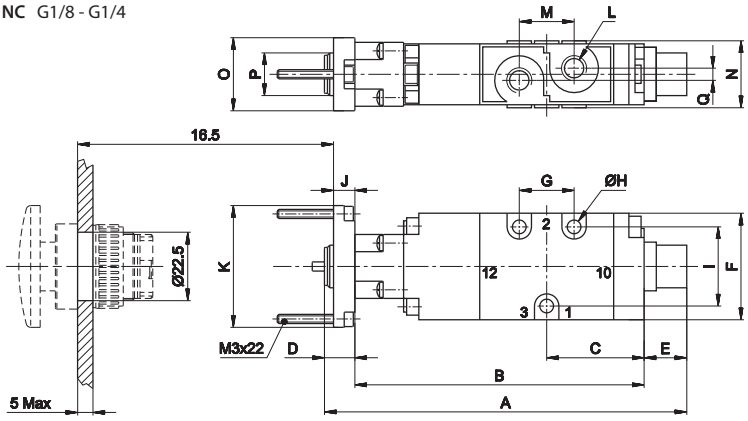

1 = Supply port
2 = Use
3 = Exhaust
12 = Control
10 = Return

	A	B	C	D	E	F	G	H	I	J	K	L	M	N	O	P	Q
G1/8	116	92	32	10	14	35	18	4,5	26	7	40	G1/8	18	22	24	M14X1	4
G1/4	136,5	112	41	10	14,5	48	22	5,5	38	7	40	G1/4	22	26	24	M14X1	4

5/2 G1/8 - G1/4

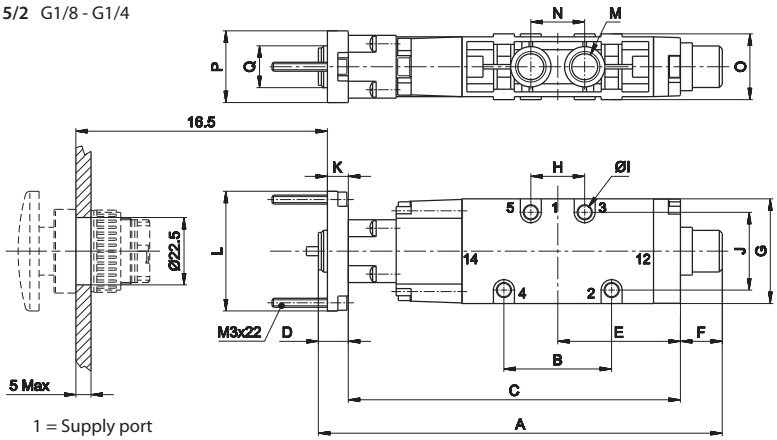

1 = Supply port
2 - 4 = Use
3 - 5 = Exhaust
14 = Control
12 = Return

	A	B	C	D	E	F	G	H	I	J	K	L	M	N	O	P	Q
G1/8	135	36	111	10	41	14	35	18	4,5	22	7	40	G1/8	18	22	24	M14X1
G1/4	154	48	129,5	10	49,7	14,5	48	22	5,5	26	7	40	G1/4	22	26	24	M14X1

For actuator dimensions see section **"Accessories>Buttons"**

G1/8 Manually operated valves

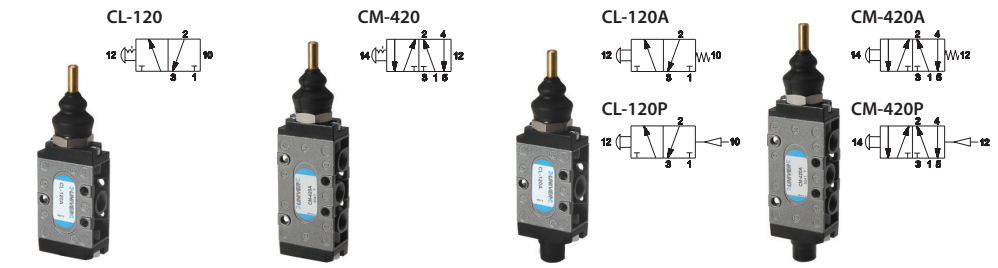

YELLOW
CP-911G
RED
CP-911R
BLACK
CP-911N
GREEN
CP-911V

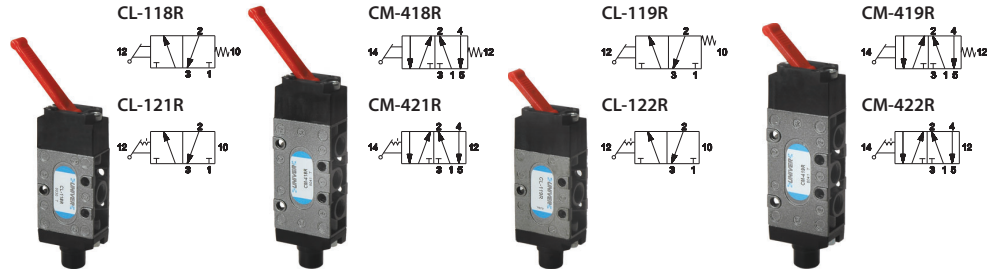

LONG LEVER

STANDARD
RED

UPON REQUEST
YELLOW
BLACK

SHORT LEVER

STANDARD
RED
YELLOW
BLACK
GREEN

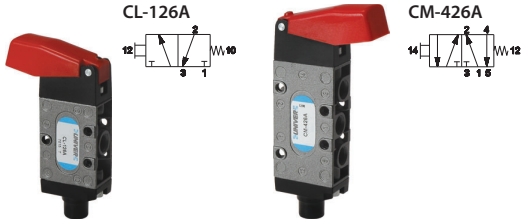

STANDARD LEVER
RED

	Return	Flow rate (Nl/min)	Ø mm	Weight Kg	Force N	Part no.	Composition (a) Control	Body	Return	Tot L. mm
	PUSH-PULL (b)									
3/2 NC-NO	push-pull	890	6,5	0,19	25	**CL-120**	A	1	H	108,5
5/2	push-pull	890	6,5	0,22	25	**CM-420**	A	2	H	125
3/2 NC-NO	mechanical spring	890	6,5	0,19	25	**CL-120A**	A	1	F	121
5/2	mechanical spring	890	6,5	0,22	25	**CM-420A**	A	2	F	137,5
3/2 NC-NO	pneumatic not amplified	890	6,5	0,18	25	**CL-120P**	A	1	I	121
5/2	pneumatic not amplified	890	6,5	0,21	25	**CM-420P**	A	2	I	137,5
	BUTTON									
3/2 NC-NO	mechanical spring	890	6,5	0,20	15	**CL-126A**	B	1	F	100
5/2	mechanical spring	890	6,5	0,23	15	**CM-426A**	B	2	F	116,5
	LONG LEVER (STANDARD RED COLOUR)									
3/2 NC-NO	mechanical spring	890	6,5	0,17	10	**CL-118R**	C	1	F	126
5/2	mechanical spring	890	6,5	0,21	10	**CM-418R**	C	2	F	142,5
3/2 NC-NO	lever	890	6,5	0,16	10	**CL-121R**	C	1	G	126
5/2	lever	890	6,5	0,20	10	**CM-421R**	C	2	G	142,5
	SHORT LEVER (STANDARD RED COLOUR)									
3/2 NC-NO	mechanical spring	890	6,5	0,17	20	**CL-119R**	C	1	F	112
5/2	mechanical spring	890	6,5	0,21	20	**CM-419R**	C	2	F	128,5
3/2 NC-NO	lever	890	6,5	0,16	20	**CL-122R**	C	1	G	112
5/2	lever	890	6,5	0,20	20	**CM-422R**	C	2	G	128,5

To get 3/2 NO version, supply the valve from port 3
(b) = valves are supplied without operator Pressure 0 ÷10 bar for all part numbers

(a) = see pages **3**_18
Overall dimensions include operator

G1/8 Manually operated velves

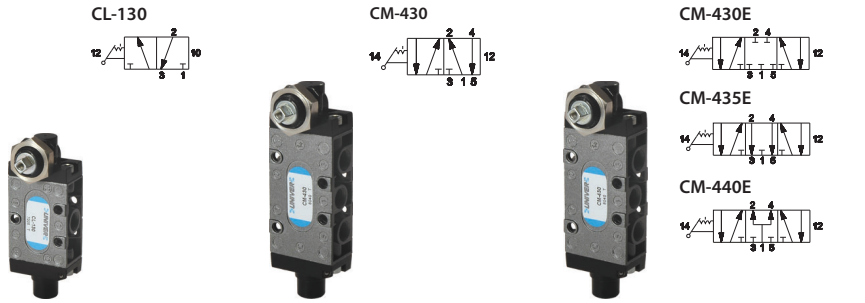

RED
CP-915R

RED
CP-916R

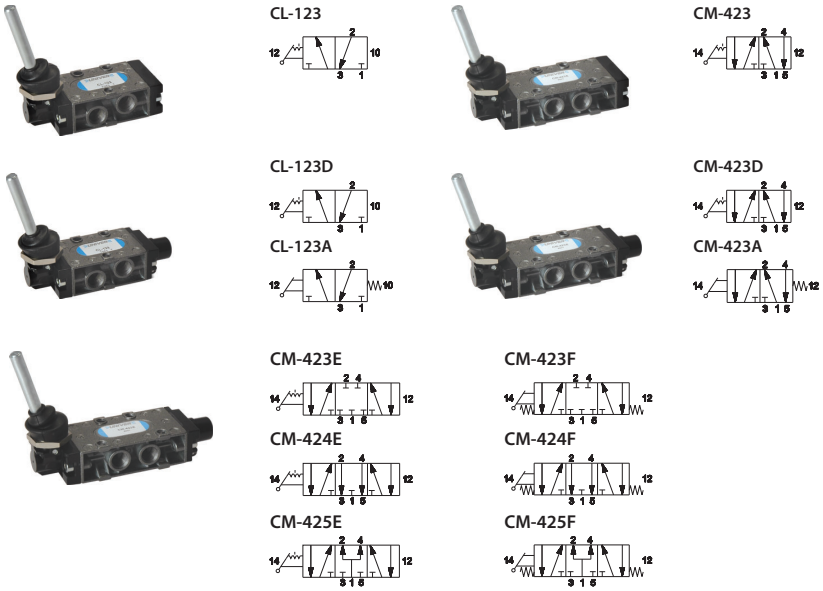

SHORT LEVER

YELLOW
CP-912G
RED
CP-912R
BLACK
CP-912N

LONG LEVER

RED
CP-913R

	Return	Flow rate (Nl/min)	Ø mm	Weight Kg	Force N	Part no.	Composition (a) Control	Body	Return	Tot L. mm
	ROTATING LEVER (SELECTOR UPON REQUEST) (b)									
3/2 NC-NO	rotating lever	890	6,5	0,22	27	**CL-130**	D	1	G	97
5/2	rotating lever	890	6,5	0,25	27	**CM-430**	D	2	G	113,5
5/3 c.c.	rotating lever	890	6,5	0,25	27	**CM-430E**	D	2	G	113,5
5/3 o.c.	rotating lever	890	6,5	0,24	27	**CM-435E**	D	2	G	113,5
5/3 p.c.	rotating lever	890	6,5	0,24	27	**CM-440E**	D	2	G	113,5
	90° LEVER - 3 POSITION (b)									
3/2 NC-NO	lever	890	6,5	0,17	2,5÷4	**CL-123**	E	1	H	79,5
5/2	lever	890	6,5	0,23	2,5÷4	**CM-423**	E	2	H	96
3/2 NC-NO	lever	890	6,5	0,17	3,5÷5	**CL-123D**	E	1	G	92
5/2	lever	890	6,5	0,23	3,5÷5	**CM-423D**	E	2	G	108,5
3/2 NC-NO	mechanical spring	890	6,5	0,18	9÷13	**CL-123A**	E	1	F	92
5/2	mechanical spring	890	6,5	0,23	9÷13	**CM-423A**	E	2	F	108,5
5/3 c.c.	lever	890	6,5	0,23	3,5÷5	**CM-423E**	E	2	G	108,5
	lever	890	6,5	0,23	6,5÷10	**CM-423F**	E	2	G	108,5
5/3 o.c.	lever	890	6,5	0,23	3,5÷3	**CM-424E**	E	2	G	108,5
	lever	890	6,5	0,23	6,5÷10	**CM-424F**	E	2	G	108,5
5/3 p.c.	lever	890	6,5	0,23	7,5÷5	**CM-425E**	E	2	G	108,5
	lever	890	6,5	0,23	6,5÷10	**CM-425F**	E	2	G	108,5

o.c. = open centres **c.c.** = closed centres **p.c.** = pressurized centres
To get 3/2 NO version, supply the valve from port 3
(b) = valves are supplied without operator Pressure 0 ÷10 bar for all part numbers

(a) = see pages **3**_18
Overall dimensions include operator

Subject to change

G1/4 Manually operated velves

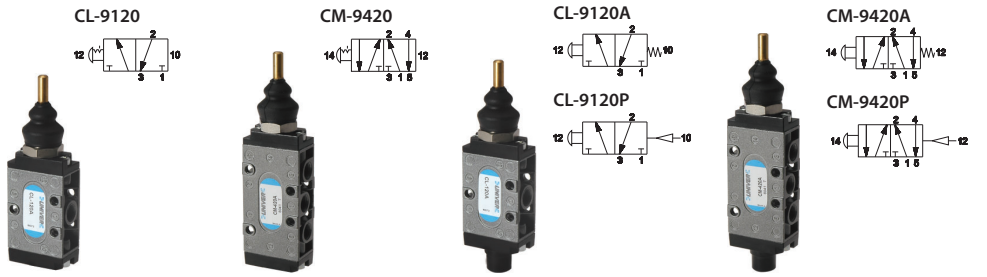

- YELLOW **CP-911G**
- RED **CP-911R**
- BLACK **CP-911N**
- GREEN **CP-911V**

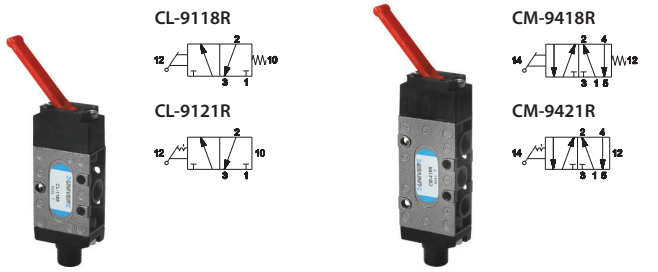

STANDARD LEVER
- RED

UPON REQUEST LEVER
- YELLOW
- BLACK

	Return	Flow rate (Nl/min)	Ø mm	Weight Kg	Force N	Part no.	Composition [a] Control	Body	Return	Tot L. mm
	PUSH-PULL [b]									
3/2 NC-NO	push-pull	1480	8,5	0,26	26	**CL-9120**	A	1	H	127
5/2	push-pull	1480	8,5	0,26	26	**CM-9420**	A	2	H	144,5
3/2 NC-NO	mechanical spring	1480	8,5	0,26	26	**CL-9120A**	A	1	F	138
5/2	mechanical spring	1480	8,5	0,26	26	**CM-9420A**	A	2	F	155,5
3/2 NC-NO	pneumatic not amplified	1480	8,5	0,24	26	**CL-9120P**	A	1	I	127
5/2	pneumatic not amplified	1480	8,5	0,24	26	**CM-9420P**	A	2	I	144,5
	LONG LEVER (standard red colour)									
3/2 NC-NO	mechanical spring	1480	8,5	0,23	11	**CL-9118R**	C	1	F	144
5/2	mechanical spring	1480	8,5	0,25	11	**CM-9418R**	C	2	F	161,5
3/2 NC-NO	lever	1480	8,5	0,22	11	**CL-9121R**	C	1	G	144
5/2	lever	1480	8,5	0,24	11	**CM-9421R**	C	2	G	161,5

To get 3/2 NO version, supply the valve from port 3
(b) = valves are supplied without operator Pressure 0 ÷10 bar for all part numbers

(a) = see pages **3**_18
Overall dimensions include operator

G1/4 Manually operated velves

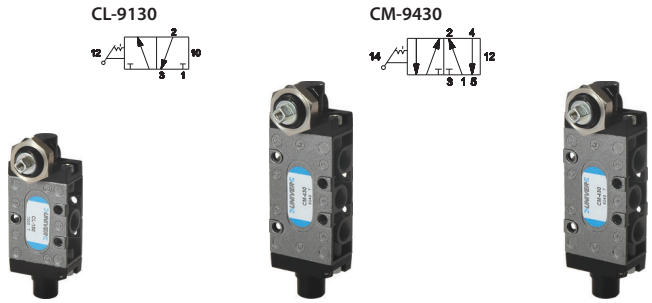

RED
CP-915R

RED
CP-916R

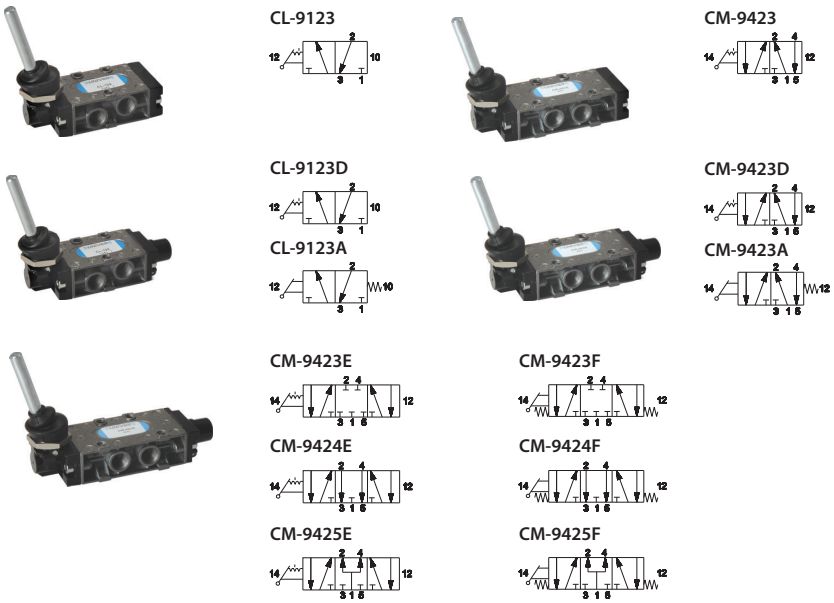

SHORT LEVER

YELLOW
CP-912G
RED
CP-912R
BLACK
CP-912N

LONG LEVER

RED
CP-913R

	Return	Flow rate (Nl/min)	Ø mm	Weight Kg	Force N	Part no.	Composition[a] Control	Body	Return	Tot L. mm
	ROTATING LEVER (SELECTOR UPON REQUEST)									
3/2 NC-NO	rotating lever	1480	8,5	0,25	29	**CL-9130**	D	1	G	113
5/2	rotating lever	1490	8,5	0,27	29	**CM-9430**	D	2	G	130,5
5/3 c.c.	rotating lever	1480	8,5	0,27	29	**CM-9430E**	D	2	G	130,5
5/3 o.c.	rotating lever	1480	8,5	0,26	29	**CM-9435E**	D	2	G	130,5
5/3 p.c.	rotating lever	1480	8,5	0,26	29	**CM-9440E**	D	2	G	130,5
	90° LEVER - 3 POSITION [b]									
3/2 NC-NO	lever	1480	8,5	0,23	2,7÷4,5	**CL-9123**	E	1	H	99,5
5/2	lever	1480	8,5	0,28	2,7÷4,5	**CM-9423**	E	2	H	117,5
3/2 NC-NO	lever	1480	8,5	0,23	3,6÷5,2	**CL-9123D**	E	1	G	110,5
5/2	lever	1480	8,5	0,28	3,6÷5,2	**CM-9423D**	E	2	G	128
3/2 NC-NO	mechanical spring	1480	8,5	0,24	10÷14	**CL-9123A**	E	1	F	110,5
5/2	mechanical spring	1480	8,5	0,28	10÷14	**CM-9423A**	E	2	F	128
5/3 c.c.	lever	1480	8,5	0,28	3,6÷5,2	**CM-9423E**	E	2	G	128
	lever	1480	8,5	0,28	6,7÷11	**CM-9423F**	E	2	G	128
5/3 o.c.	lever	1480	8,5	0,28	3,6÷5,2	**CM-9424E**	E	2	G	128
	lever	1480	8,5	0,28	6,7÷11	**CM-9424F**	E	2	G	128
5/3 p.c.	lever	1480	8,5	0,28	3,6÷5,2	**CM-9425E**	E	2	G	128
	lever	1480	8,5	0,28	6,7÷11	**CM-9425F**	E	2	G	128

o.c. = open centres **c.c.** = closed centres **p.c.** = pressurized centres
To get 3/2 NO version, supply the valve from port 3
(b) = valves are supplied without operator Pressure 0 ÷10 bar for all part numbers

(a) = see pages **3**_18
Overall dimensions include operator

Subject to change

Composition

CONTROL

A G1/8 - G1/4 PUSH-PULL

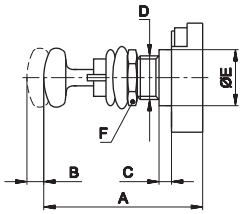

	A	B	C	D	E	F
G1/8	51	5,4	4	M14x1	16	18
G1/4	52,5	6	2,5	M16x1,5	22	22

B G1/8 BUTTON

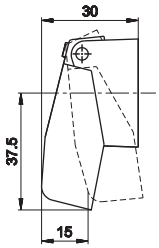

C G1/8 - G1/4 LONG/SHORT LEVER

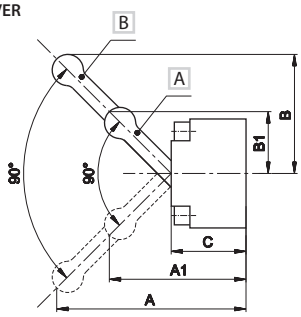

A Short lever
B Long lever

	A	A1	B	B1	C
G1/8	56	42	38,5	24	22,5

	A	B	C
G1/4	58,5	32	26

D G1/8 - G1/4 ROTATING LEVER

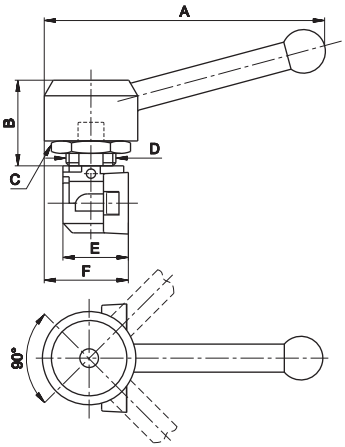

G1/8 - G1/4 SELECTOR

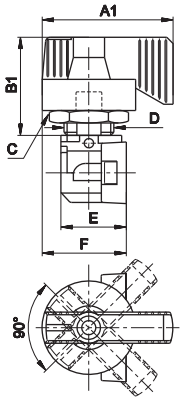

	A	A1	B	B1	C	D	E	F
G1/8	89	42	32	29	22	M16x1,5	22	27
G1/4	89	42	32	29	24	M18x1,5	25	27,5

E G1/8 - G1/4 90° LEVER

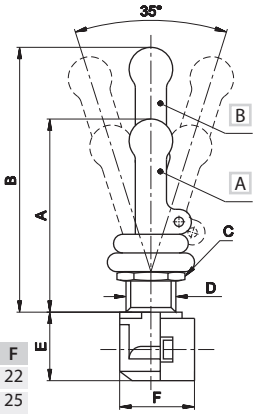

A Short lever
B Long lever

	A	B	C	D	E	F
G1/8	62	85	22	M16x1,5	21,5	22
G1/4	90	110	24	M18x1,5	29	25

BODY

1 3/2 NC-NO G1/8 - G1/4

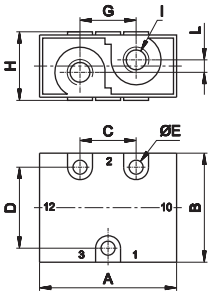

>> NC	>> NO
1 =Supply port	1 = Exhaust
2 = Use	2 = Use
3 = Exhaust	3 = Supply port
12 = Control	12 = Control
10 = Return	10 = Return

	A	B	C	D	E	G	H	I	L
G1/8	47,5	35	18	26	4,5	18	22	G1/8	4
G1/4	60	48	22	38	5,5	22	26	G1/4	4

2 5/2 - 5/3 G1/8 - G1/4

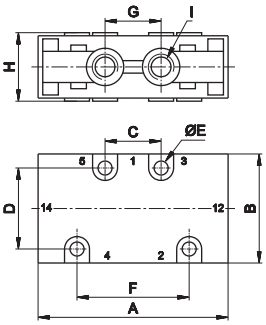

1 =Supply port
2 - 4 = Use
3 - 5 = Exhaust
14 = Control
12 = Return

	A	B	C	D	E	F	G	H	I
G1/8	64	35	18	26	4,5	36	18	22	G1/8
G1/4	77,5	48	22	38	5,5	48	22	26	G1/4

RETURN

F G1/8 - G1/4 MECHANICAL SPRING

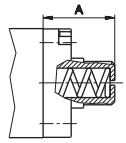

	A
G1/8	22,5
G1/4	25,5

G G1/8 - G1/4 2/3 POSITION

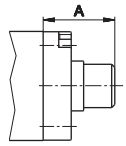

	A
G1/8	22,5
G1/4	25,5

H BOTTOM PLATE WITHOUT SPRING G1/8 - G1/4

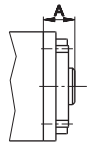

	A
G1/8	10
G1/4	14,5

I G1/8 - G1/4 PNEUMATIC NOT AMPLIFIED

>> G1/8

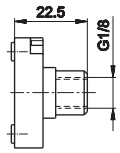

>> G1/4

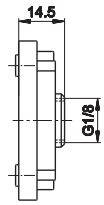

3 VALVES

G1/8 Valves with pneumatic control

CL-200

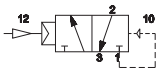

CL-203

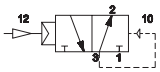

CL-200A

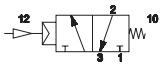

CM-500

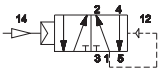

CM-500A

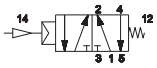

CL-220

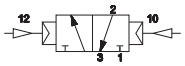

CL-221

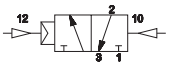

CL-224

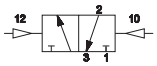

CM-520

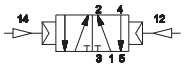

CM-521

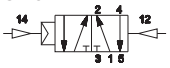

CM-524

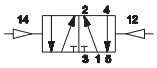

CM-580

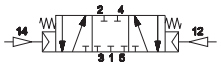

CM-585

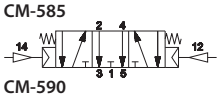

CM-590

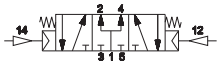

	Control	Return	Pressure bar	Flow rate (Nl/min)	Ø mm	Weight Kg	Resp. Time (ms) En.	Resp. Time (ms) De-en.	Part no.	Composition[a] Control	Composition[a] Body	Composition[a] Return	Tot L. mm
	SINGLE IMPULSE												
3/2 NC	pneumatic amplified	pneumatic spring	2,3÷10	890	6,5	0,20	11	14	**CL-200**	B	1	E	82,5
3/2 NO	pneumatic amplified	pneumatic spring	2,3÷10	890	6,5	0,20	11	14	**CL-203**	B	1	E	82,5
3/2 NC-NO	pneumatic amplified	mechanical spring	2,5÷10	890	6,5	0,21	9	17	**CL-200A**	B	1	D	95
5/2	pneumatic amplified	pneumatic spring	2,5÷10	890	6,5	0,20	10	15	**CM-500**	B	2	E	99
	pneumatic amplified	mechanical spring	3÷10	890	6,5	0,19	10	18	**CM-500A**	B	2	D	111,5
	DOUBLE IMPULSE												
3/2 NC-NO	pneumatic amplified	pneumatic amplified	1÷10	890	6,5	0,16	6	6	**CL-220**	B	1	F	97,5
	pneumatic amplified	pneumatic not amplified	1,7÷10	890	6,5	0,15	6	8	**CL-221**	B	1	G	95
	pneumatic non amplified	pneumatic not amplified	1,7÷10	890	6,5	0,14	8	8	**CL-224**	C	1	G	92,5
5/2	pneumatic amplified	pneumatic amplified	1,2÷10	890	6,5	0,18	7	7	**CM-520**	B	2	F	114
	pneumatic amplified	pneumatic not amplified	2÷10	890	6,5	0,19	7	9	**CM-521**	B	2	G	111,5
	pneumatic non amplified	pneumatic not amplified	2÷10	890	6,5	0,20	9	9	**CM-524**	C	2	G	109
5/3 c.c.	pneumatic amplified	pneumatic amplified	2,5÷10	890	6,5	0,21	8	12	**CM-580**	B	2	F	114
5/3 o.c.	pneumatic amplified	pneumatic amplified	2,5÷10	890	6,5	0,21	8	12	**CM-585**	B	2	F	114
5/3 p.c.	pneumatic amplified	pneumatic amplified	2,5÷10	890	6,5	0,21	8	12	**CM-590**	B	2	F	114

o.c. = open centres **c.c.** = closed centres **p.c.** = pressurized centres

To get 3/2 NO version, supply the valve from port 3

(a) = see page **3_23**

Subject to change

G1/4 Valves with pneumatic control

CL-9200

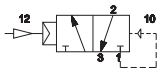

CL-9203

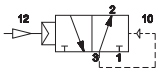

CL-9200A

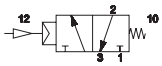

CM-9500

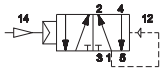

CM-9500A

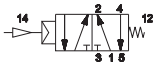

CL-9220

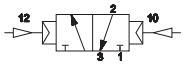

CL-9221

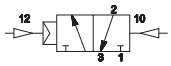

CL-9224

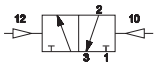

CM-9520

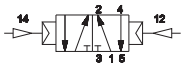

CM-9521

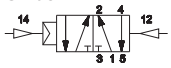

CM-9524

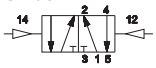

CM-9580

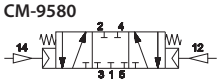

CM-9585

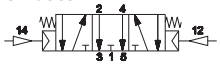

CM-9590

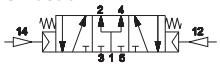

	Control	Return	Pressure bar	Flow rate (Nl/min)	Ø mm	Weight Kg	Resp. Time (ms) En.	Resp. Time (ms) De-en.	Part no.	Composition[a] Control	Composition[a] Body	Composition[a] Return	Tot L. mm
	SINGLE IMPULSE												
3/2 NC	pneumatic amplified	pneumatic spring	2÷10	1480	8,5	0,23	13	16	**CL-9200**	B	1	E	103
3/2 NO	pneumatic amplified	pneumatic spring	2÷10	1480	8,5	0,23	13	16	**CL-9203**	B	1	E	103
3/2 NC-NO	pneumatic amplified	mechanical spring	2÷10	1480	8,5	0,24	10	19	**CL-9200A**	B	1	D	114
5/2	pneumatic amplified	pneumatic spring	2÷10	1480	8,5	0,26	13	16	**CM-9500**	B	2	E	120,5
	pneumatic amplified	mechanical spring	2÷10	1480	8,5	0,17	11	20	**CM-9500A**	B	2	D	131,5
	DOUBLE												
3/2 NC-NO	pneumatic amplified	pneumatic amplified	1÷10	1480	8,5	0,21	8	8	**CL-9220**	B	1	F	117
	pneumatic amplified	pneumatic not amplified	1,5÷10	1480	8,5	0,22	8	10	**CL-9221**	B	1	G	103
	pneumatic not amplified	pneumatic not amplified	1,5÷10	1480	8,5	0,24	10	10	**CL-9224**	C	1	G	89
5/2	pneumatic amplified	pneumatic amplified	1,5÷10	1480	8,5	0,24	9	9	**CM-9520**	B	2	F	134,5
	pneumatic amplified	pneumatic not amplified	1,8÷10	1480	8,5	0,25	9	10	**CM-9521**	B	2	G	120,5
	pneumatic not amplified	pneumatic not amplified	1,8÷10	1480	8,5	0,27	10	10	**CM-9524**	C	2	G	198,5
5/3 c.c.	pneumatic amplified	pneumatic amplified	2,8÷10	1480	8,5	0,30	10	13	**CM-9580**	B	2	F	134,5
5/3 o.c.	pneumatic amplified	pneumatic amplified	2,8÷10	1480	8,5	0,30	10	13	**CM-9585**	B	2	F	134,5
5/3 p.c.	pneumatic amplified	pneumatic amplified	1,8÷10	1480	8,5	0,30	10	13	**CM-9590**	B	2	F	134,5

o.c. = open centres **c.c.** = closed centres **p.c.** = pressurized centres

To get 3/2 NO version, supply the valve from port 3

(a) = see page **3_23**

G1/8 Valves with electric control

CL-300
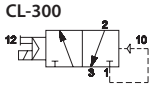

CL-302A
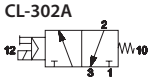

CL-301
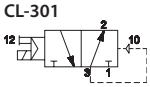

CL-303A
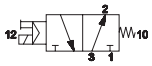

CM-600
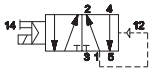

CM-602A
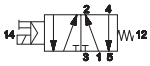

CL-320
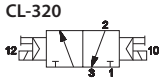

CL-321
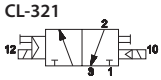

CL-322
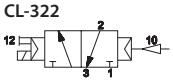

CM-620
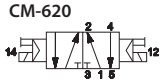

CM-621
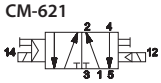

CM-622
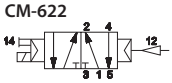

CM-680
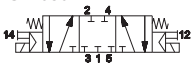

CM-685
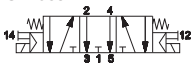

CM-690
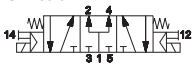

- **Electropilots are supplied without coil, connector and locking ring**
- For technical details about coils see section **"Accessories > Coils"**

	Control	Return	Pressure bar	Flow rate (Nl/min)	Ø mm	Weight Kg	Resp. Time (ms) En.	Resp. Time (ms) De-en.	Part no.	Composition[a] Control	Composition[a] Body	Composition[a] Return	Tot L. mm
	SINGLE IMPULSE												
3/2 NC	electrical amplified	pneumatic spring	2,3÷10	890	6,5	0,20	23	19	**CL-300**	A	1	E	140,5
	electrical amplified	mechanical spring	2,5÷10	890	6,5	0,21	20	24	**CL-302A**	A	1	D	153
3/2 NO	electrical amplified	pneumatic spring	2,3÷10	890	6,5	0,20	23	19	**CL-301**	A	1	E	140,5
	electrical amplified	mechanical spring	2,5÷10	890	6,5	0,21	20	24	**CL-303A**	A	1	D	153
5/2	electrical amplified	pneumatic spring	2,5÷10	890	6,5	0,24	24	20	**CM-600**	A	2	E	157
	electrical amplified	mechanical spring	3÷10	890	6,5	0,25	21	25	**CM-602A**	A	2	D	169,5
	DOUBLE IMPULSE												
3/2 NC-NO	electrical amplified	electrical amplified	1÷10	890	6,5	0,24	17	17	**CL-320**	A	1	H	213,5
	electrical amplified	electrical not amplified	1,7÷10	890	6,5	0,24	17	20	**CL-321**	A	1	H	213,5
	electrical amplified	pneumatic amplified	2,5÷10	890	6,5	0,21	20	7	**CL-322**	A	1	F	155,5
5/2	electrical amplified	electrical amplified	1,2÷10	890	6,5	0,28	20	20	**CM-620**	A	2	H	230
	electrical amplified	electrical not amplified	2÷10	890	6,5	0,28	20	23	**CM-621**	A	2	H	230
	electrical amplified	pneumatic amplified	1,2÷10	890	6,5	0,24	20	8	**CM-622**	A	2	F	172
5/3 c.c.	electrical amplified	electrical amplified	2,5÷10	890	6,5	0,21	18	24	**CM-680**	A	2	H	230
5/3 o.c.	electrical amplified	electrical amplified	2,5÷10	890	6,5	0,21	18	24	**CM-685**	A	2	H	230
5/3 p.c.	electrical amplified	electrical amplified	2,5÷10	890	6,5	0,21	18	24	**CM-690**	A	2	H	230

o.c. = open centres **c.c.** = closed centres **p.c.** = pressurized centres
To get 3/2 NO version, supply the valve from port 3

(a) = see page **3_23**

G1/4 Valves with electric control

CL-9300
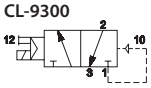

CL-9302A
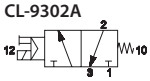

CL-9301
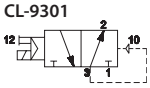

CL-9303A
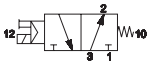

CM-9600
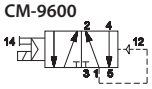

CM-9602A
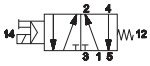

CL-9320
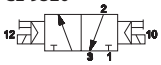

CL-9321
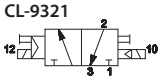

CL-9322
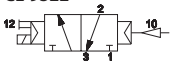

CM-9620
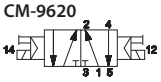

CM-9621
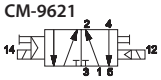

CM-9622
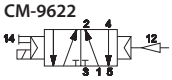

CM-9680
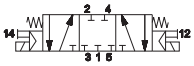

CM-9685
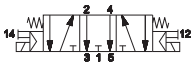

CM-9690
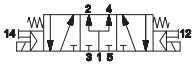

- **Electropilots are supplied without coil, connector and locking ring**
- For technical details about coils see section **"Accessories > Coils"**

	Control	Return	Pressure bar	Flow rate (Nl/min)	Ø mm	Weight Kg	Resp. Time (ms) En.	Resp. Time (ms) De-en.	Part no.	Composition(a) Control	Composition(a) Body	Composition(a) Return	Tot L. mm
	SINGLE IMPULSE												
3/2 NC	electrical amplified	pneumatic spring	2÷10	1480	8,5	0,27	24	28	**CL-9300**	A	1	E	161
	electrical amplified	mechanical spring	2÷10	1480	8,5	0,28	22	35	**CL-9302A**	A	1	D	172
3/2 NO	electrical amplified	pneumatic spring	2÷10	1480	8,5	0,27	24	28	**CL-9301**	A	1	E	161
	electrical amplified	mechanical spring	2÷10	1480	8,5	0,28	22	35	**CL-9303A**	A	1	D	172
5/2	electrical amplified	pneumatic spring	2÷10	1480	8,5	0,30	25	32	**CM-9600**	A	2	E	178,5
	electrical amplified	mechanical spring	2÷10	1480	8,5	0,31	22	43	**CM-9602A**	A	2	D	189,5
	DOUBLE IMPULSE												
3/2 NC_NO	electrical amplified	electrical amplified	2÷10	1480	8,5	0,29	18	18	**CL-9320**	A	1	H	233
	electrical amplified	elettrico not amplified	1,5÷10	1480	8,5	0,30	18	22	**CL-9321**	A	1	H	233
	electrical amplified	pneumatic amplified	2÷10	1480	8,5	0,26	22	8	**CL-9322**	A	1	F	175
5/2	electrical amplified	electrical amplified	1,5÷10	1480	8,5	0,32	22	22	**CM-9620**	A	2	H	250,5
	electrical amplified	elettrico not amplified	1,8÷10	1480	8,5	0,32	22	25	**CM-9621**	A	2	H	250,5
	electrical amplified	pneumatic amplified	1,5÷10	1480	8,5	0,29	22	10	**CM-9622**	A	2	F	192,5
5/3 c.c.	electrical amplified	electrical amplified	2,8÷10	1480	8,5	0,30	20	35	**CM-9680**	A	2	H	250,5
5/3 o.c.	electrical amplified	electrical amplified	2,8÷10	1480	8,5	0,30	20	35	**CM-9685**	A	2	H	250,5
5/3 p.c.	electrical amplified	electrical amplified	2,8÷10	1480	8,5	0,30	20	35	**CM-9690**	A	2	H	250,5

o.c. = open centres **c.c.** = closed centres **p.c.** = pressurized centres

To get 3/2 NO version, supply the valve from port 3

(a) = see pages **3**_23

CONTROL

A G1/8 - G1/4 ELECTRIC/AMPLIFIED

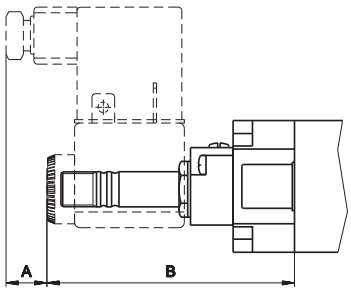

	A	B
G1/8	10	77
G1/4	10	80

B G1/8 - G1/4 PNEUMATIC AMPLIFIED

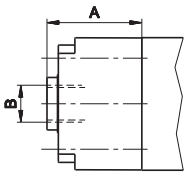

	A	B
G1/8	25	G1/8
G1/4	28,5	G1/8

C G1/8 - G1/4 PNEUMATIC NOT AMPLIFIED

>> G1/8

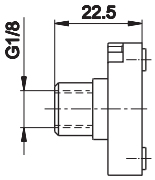

>> G1/4

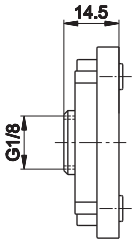

BODY

1 3/2 NC-NO G1/8 - G1/4

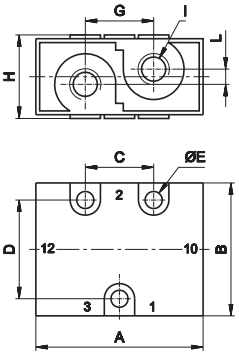

>> NC	>> NO
1 = Supply port	1 = Exhaust
2 = Use	2 = Use
3 = Exhaust	3 = Supply port
12 = Control	12 = Control
10 = Return	10 = Return

	A	B	C	D	E	G	H	I	L
G1/8	47,5	35	18	26	4,5	18	22	G1/8	4
G1/4	60	48	22	38	5,5	22	26	G1/4	4

2 5/2 G1/8 - G1/4

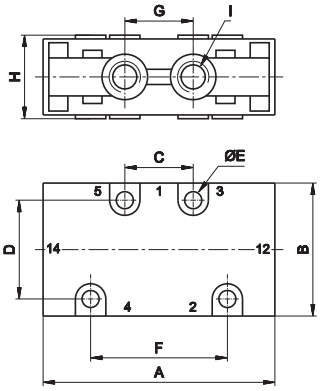

1 = Supply port
2 - 4 = Use
3 - 5 = Exhaust
14 = Control
12 = Return

	A	B	C	D	E	F	G	H	I
G1/8	64	35	18	26	4,5	36	18	22	G1/8
G1/4	77,5	48	22	38	5,5	48	22	26	G1/4

RETURN

D G1/8 - G1/4 MECHANICAL SPRING

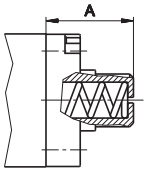

	A
G1/8	22,5
G1/4	25,5

E G1/8 - G1/4 PNEUMATIC SPRING

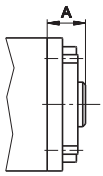

	A
G1/8	10
G1/4	14,5

F G1/8 - G1/4 PNEUMATIC AMPLIFIED

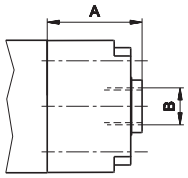

	A	B
G1/8	25	G1/8
G1/4	28,5	G1/8

G G1/8 - G1/4 PNEUMATIC NOT AMPLIFIED

>> G1/8

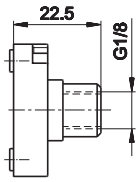

>> G1/4

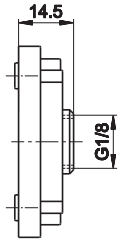

H G1/8 - G1/4 ELECTRIC AMPLIFIED

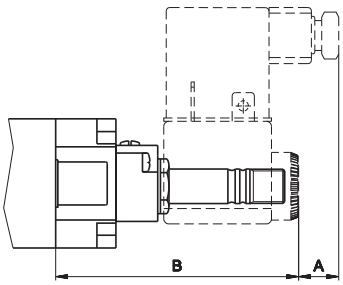

	A	B
G1/8	10	73
G1/4	10	76,5

Subject to change

AM-5148

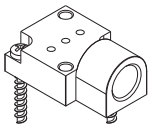

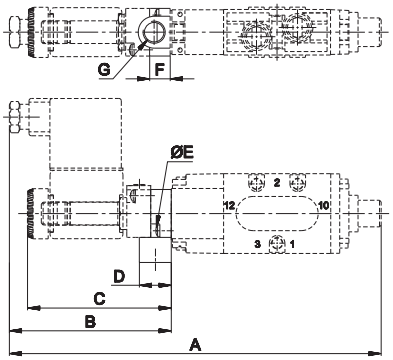

	G1/8	G1/4
A	163	175,5
B	71	71
C	63	63
D	14	14
E	2,9x10	2,9x10
F	9	9
G	G1/8	G1/8

Plate for external servoassistance
weight: 0,03 Kg

AM-5151

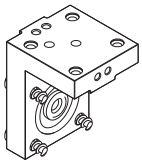

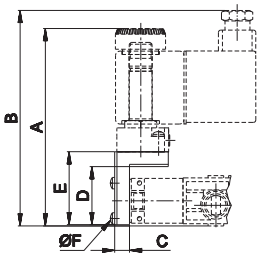

AM-5151 + AM-5148

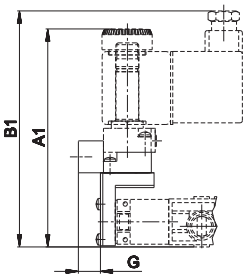

	G1/8	G1/4
A	86,7	88,7
A1	95,7	97,7
B	94,5	96,5
B1	103,5	105,5
C	6,5	6,5
D	25,5	25,5
E	32	32
F	2,9x10	2,9x10
G	9,7	9,7

"H" option angle plate
weight: 0,035 Kg

AM-5152

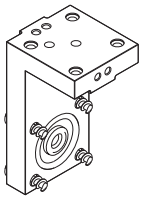

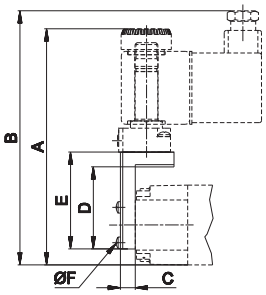

AM-5152 + AM-5148

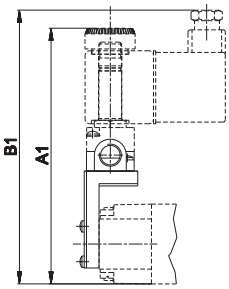

	G1/8	G1/4
A	103,5	110
A1	112,2	118,7
B	111,5	118
B1	120	126,5
C	6,5	6,5
D	36	36
E	42,5	42,5
F	2,9x10	2,9x10

"P" option angle plate
weight: 0,05 Kg

G1/8 Modular subbase "CLIPS" for 3/2 - 5/2 - 5/3 valves

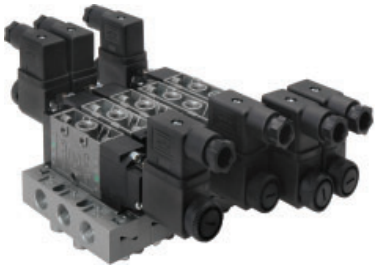

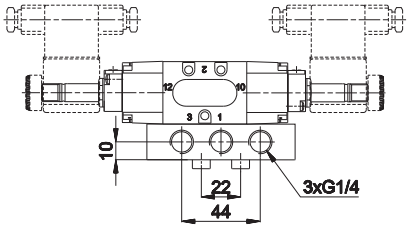

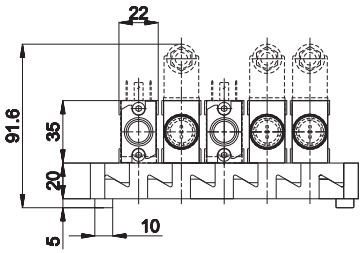

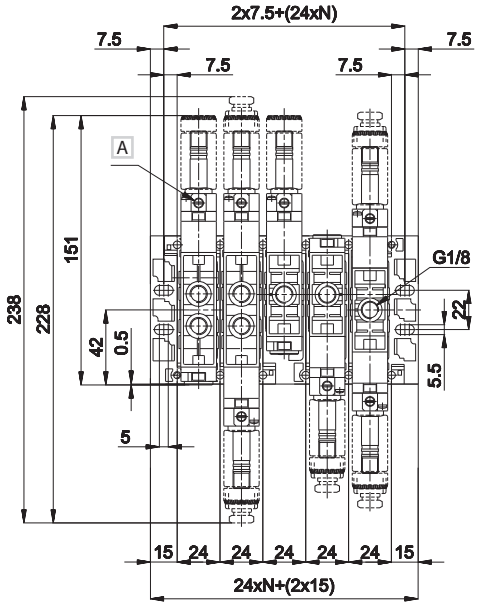

>> **NC**
1 = Supply port
2 = Use
3 = Exhaust
12 = Control
10 = Return

>> **NO**
1 = Exhaust
2 = Use
3 = Supply port
12 = Control
10 = Return

N = Number of valve places

A Manual override

3

When assembling the manifold put the sub-base on a flat surface and tighten the special screw supplied. This will give perfect alignment.

CP-100	CP-101	CP-105
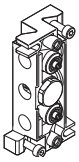	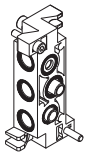	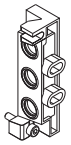
modular sub-base with regulated and conveyed exhausts connections: G1/8 material: zamak weight: 0,136 Kg	modular sub-base without exhaust regulator connections: G1/8 material: zamak weight: 0,136 Kg	inlet plate side connections connections: G1/4 material: zamak weight: 0,086 Kg
standard supplied: screws, seals, exhausts regulator and fixing coupling	standard supplied: screws, seals and fixing coupling of valve	standard supplied: screws and seals

CP-110	CP-111	CP-112	CP-113
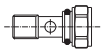			
coupling connections: G1/8 material: brass weight: 0,028 Kg	pressure separator connections: G1/8 material: aluminium weight: 0,013 Kg	cap for 3/2 valve mounting connections: G1/8 material: aluminium weight: 0,010 Kg	adjustment screw connections: G1/8 material: brass weight: 0,006 Kg

For each additional pressure, one coupling and two separators must be ordered.

Cap for mounting of 3/2 NC-NO valves on "CLIPS" sub-base to close non-used way. Standard sub-base with adjustment screw. The screw head has a slot for screwdrivers. Upon request: adjustment screw with crimped head.

G1/4 Modular subbase "CLIPS" for 3/2 - 5/2 - 5/3 valves

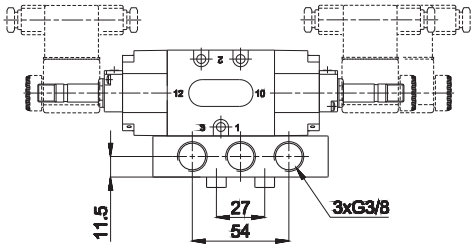

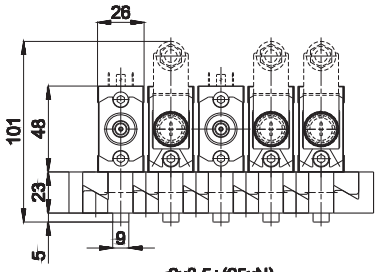

>> **NC**
1 = Supply port
2 = Use
3 = Exhaust
12 = Control
10 = Return

>> **NO**
1 = Exhaust
2 = Use
3 = Supply port
12 = Control
10 = Return

N = Number of valve places

A Manual override

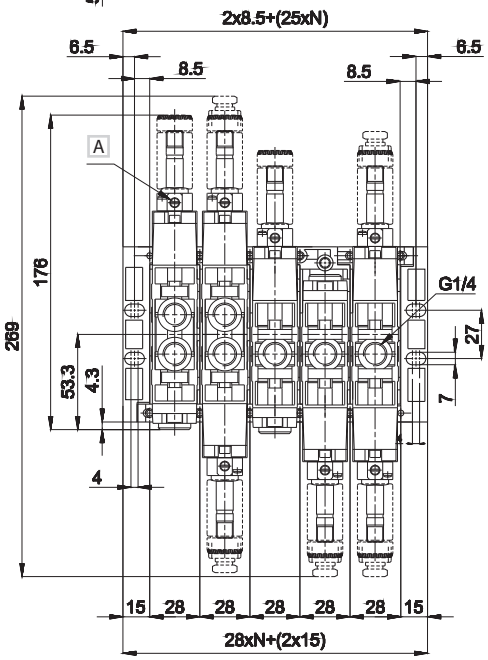

When assembling the manifold put the sub-base on a flat surface and tighten the special screw supplied. This will give perfect alignment.

CP-9100	CP-9101	CP-9105
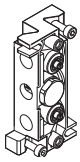	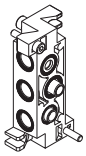	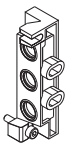
modular sub-base regulated and conveyed exhausts connections: G1/4 material: zamak weight: 0,210 Kg	modular sub-base without exhaust regulator connections: G1/4 material: zamak weight: 0,210 Kg	inlet plate side connections connections: G3/8 material: zamak weight: 0,120 Kg
standard supplied: screws, seals, exhaust regulator and fixing coupling	standard supplied: screws, seals and fixing coupling of valve	standard supplied: screws and seals

CP-9110	CP-9111	CP-9112	CP-9113
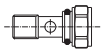			
coupling connections: G1/4 material: brass weight: 0,028 Kg	pressure separator connections: G1/4 material: aluminium weight: 0,013 Kg	cap for 3/2 valve mounting connections: G1/4 material: aluminium weight: 0,010 Kg	adjustment screw connections: G1/4 material: ottone weight: 0,006 Kg

For each additional pressure, one coupling and two separators must be ordered.

Cap for mounting of 3/2 NC-NO valves on "CLIPS" sub-base to close non-used way. Standard sub-base with adjustment screw. The screw head has a slot for screwdrivers. Upon request: adjustment screw with crimped head.

Assembly examples

■ Manifold 3 pressures

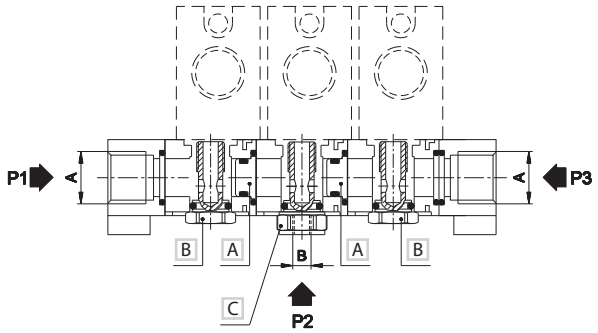

	A	B
G1/8	G1/4	G1/8
G1/4	G3/8	G1/4

A Separator of differential pressures **CP-111/CP-9111**
B Fixing coupling for valve inside the sub-base
C Coupling **CP-110/CP-9110**

■ Mounting of 3/2 NC valve

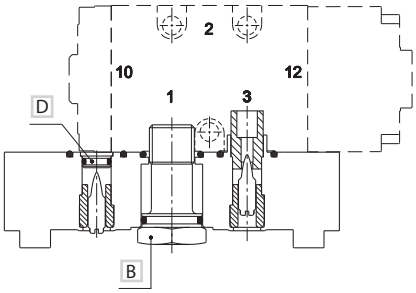

■ Mounting of 3/2 NO valve

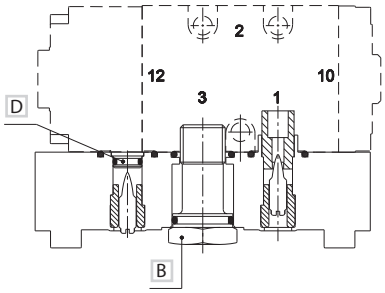

B Fixing coupling for valve inside the sub-base
D Cap for valve mounting **CP-112/CP-9112**

>> **NC**	>> **NO**
1 = Supply port	1 = Exhaust
2 = Use	2 = Use
3 = Exhaust	3 = Supply port
12 = Control	12 = Control
10 = Return	10 = Return

In case there should be no need to regulate exhaust, plastic insert has to be removed whilst the adjustment screw must remain in its place.

E

COMPA 2 Miniature Valves

- Compact design: 15 mm body
- Original Univer spool system appreciated for decades
- Wide range of actuators and manual operators for panels - original Univer

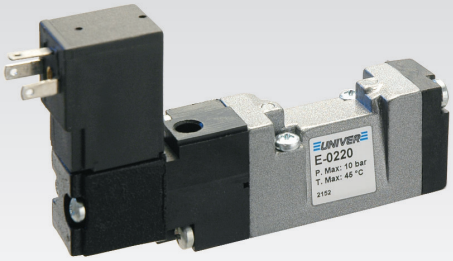

Available ATEX version upon request

II 2Gc IIC T5 II 2Dc T100°C

II 3 GD c nA II T5-10°C ≤ Ta ≤ 45°C

TECHNICAL CHARACTERISTICS

Ambient temperature	-10 ÷ +45 °C
Fluid temperature	-20 ÷ +50 °C
Fluid	10 µm filtered air
Commutation system	spool
Ways/Positions	**5/2**
Pressure	max 10 bar
Control	manual, mechanical
Return	mechanical spring
Connections	M5, for sub-base
Nominal Ø	2 mm
Nominal flow rate	150 Nl/min

CONSTRUCTIVE CHARACTERISTICS

Valve body	zamak
Seals	nitrile rubber
Actuators	technopolymer
Spool	aluminium

ELECTRIC CHARACTERISTICS

Electropilot/coil	A series/U05
Voltage	24 V DC -12 V DC - 24 V AC - 110 V AC - 230 V AC (only for version with integrated electrical connection)
Power consumption	U05 = 2 W (DC) 2,3 VA (AC) U04 = 1,2 W (DC)
Protection degree	IP65
Manual override	recessed button – 1 position

CODIFICATION KEY

E	-	0	2	2	4	
1		2		3	4	5

1 Series

E = COMPA 2 Miniature Valves

2 Type

02 = 5/2 Sub-base mounting
04 = 5/2 Threaded body M5
05 = 5/3 **c.c.** Sub-base mounting
06 = 5/3 **o.c.** Sub-base mounting
07 = 5/3 **p.c.** Sub-base mounting
08 = 5/3 **c.c.** Threaded body M5
09 = 5/3 **o.c.** Threaded body M5
10 = 5/3 **p.c.** Threaded body M5

3 Control 14

2 = Electrical amplified DC
4 = Pneumatic amplified
7 = Electrical amplified DC/AC

4 Return 12

0 = Pneumomechanical spring
2 = Electrical amplified DC
4 = Pneumatic amplified
7 = Electrical amplified DC/AC

5 ATEX version

X = Atex (upon request)

See ATEX Catalogue for types and versions

o.c. = open centres **c.c.** = closed centres **p.c.** = pressurized centres

Single pneumatic impulse

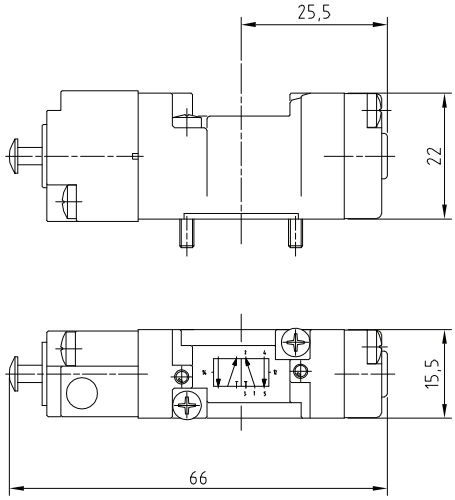

1 = Supply port
2 - 4 = Use
3 - 5 = Exhaust
14 = Control
12 = Return

Weight (Kg): 0,068

	Symbol	Control	Return	Part no.
		14	12	
5/2	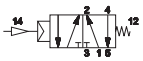	Pneumatic amplified	Pneumomecha-nical spring	**E-0240**

Double pneumatic impulse

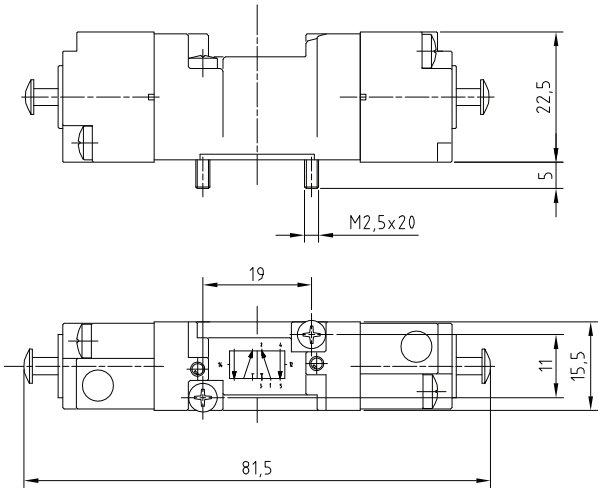

1 = Supply port
2 - 4 = Use
3 - 5 = Exhaust
14 = Control
12 = Return

Weight (Kg): 0,082

	Symbol	Control	Return	Part no.
		14	12	
5/2	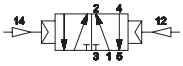	Pneumatic amplified	Pneumatic amplified	**E-0244**

Single electrical impulse

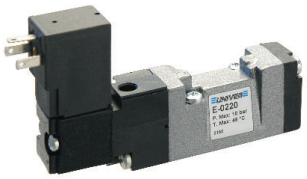

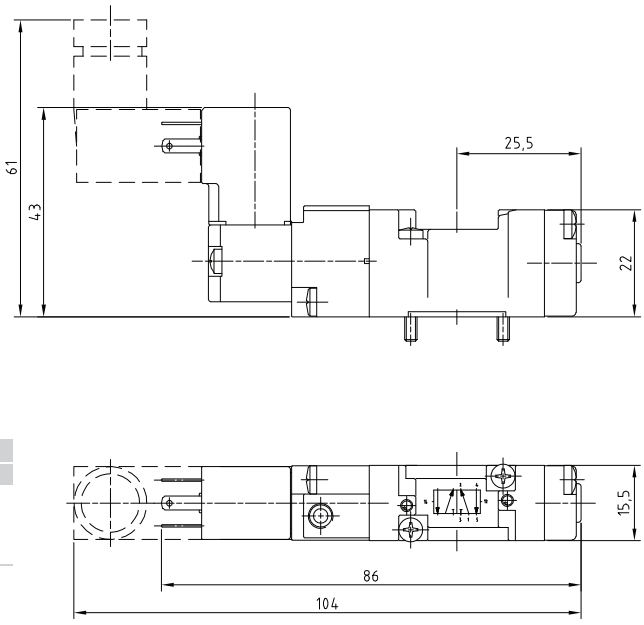

1 = Supply port
2 - 4 = Use
3 - 5 = Exhaust
14 = Control
12 = Return

Weight (Kg): 0,066

	Symbol	Control	Return	Part no.
		14	12	
5/2	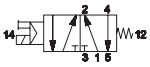	Electrical amplified	Pneumomecha-nical spring	**E-0220** **E-0270**

Solenoid valves are supplied without coil and connector

Double electrical impulse

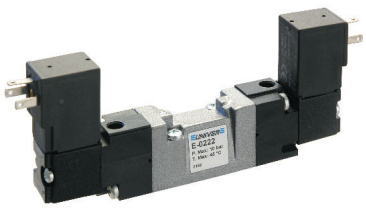

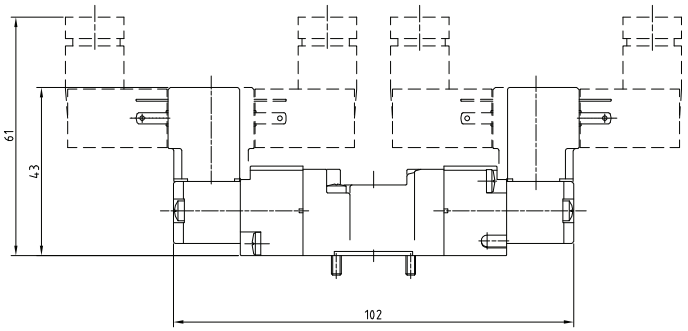

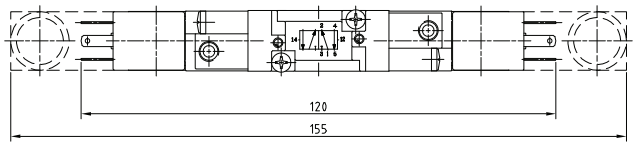

1 = Supply port
2 - 4 = Use
3 - 5 = Exhaust
14 = Control
12 = Return

Weight (Kg): 0,066

	Symbol	Control	Return	Part no.
		14	12	
5/2	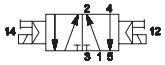	Electrical amplified	Electrical amplified	**E-0222** **E-0277**
5/3 c.c.	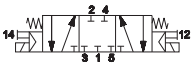	Electrical amplified	Electrical amplified	**E-0522**
5/3 o.c.	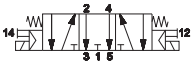	Electrical amplified	Electrical amplified	**E-0622**
5/3 p.c.	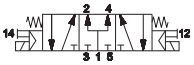	Electrical amplified	Electrical amplified	**E-0722**

o.c. = open centres **c.c.** = closed centres **p.c.** = pressurized centres

E-4500

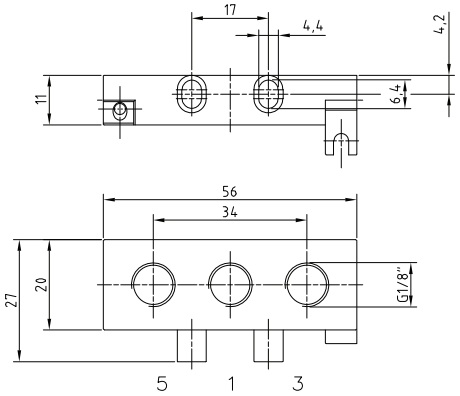

Inlet plate G1/8
material: zamak
weight: 0,055 Kg

E-4505

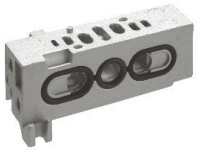

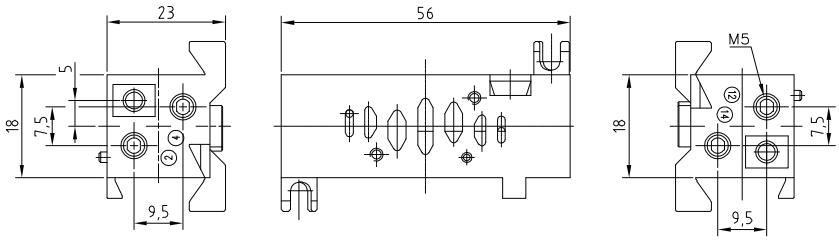

Manifold sub-base, side connections M5
material: zamak
weight: 0,095 Kg

Solenoid valves are supplied without coil and connector

Single pneumatic impulse

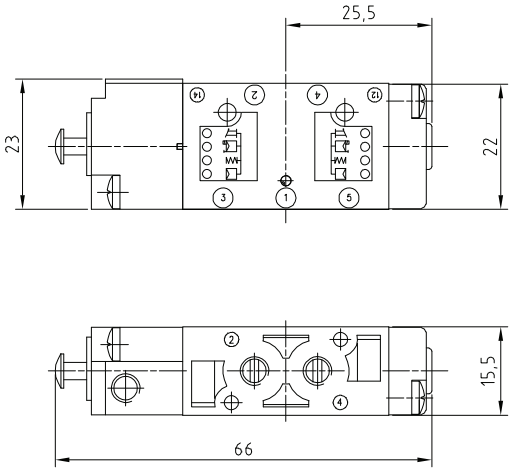

1 = Supply port
2 - 4 = Use
3 - 5 = Exhaust
14 = Control
12 = Return

Weight (Kg): 0,068

	Symbol	Control	Return	Part no.
		14	12	
5/2	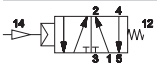	Pneumatic amplified	Pneumomecha-nical spring	**E-0440**

Double pneumatic impulse

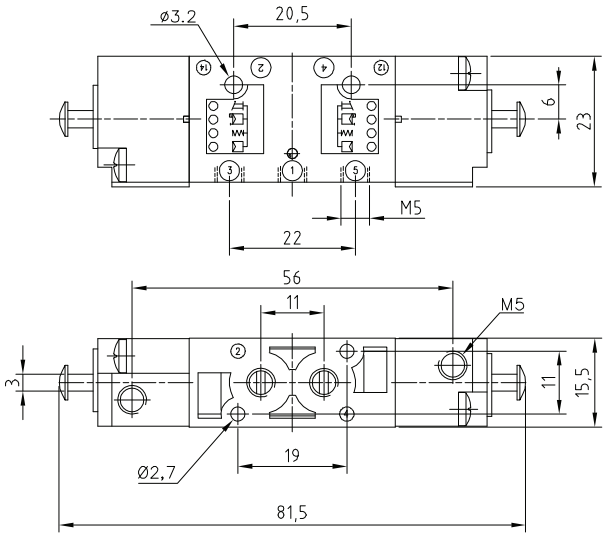

1 = Supply port
2 - 4 = Use
3 - 5 = Exhaust
14 = Control
12 = Return

Weight (Kg): 0,082

	Symbol	Control	Return	Part no.
		14	12	
5/2	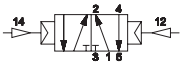	Pneumatic amplified	Pneumatic amplified	**E-0444**

Single electrical impulse

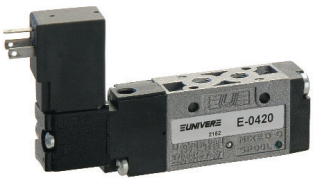

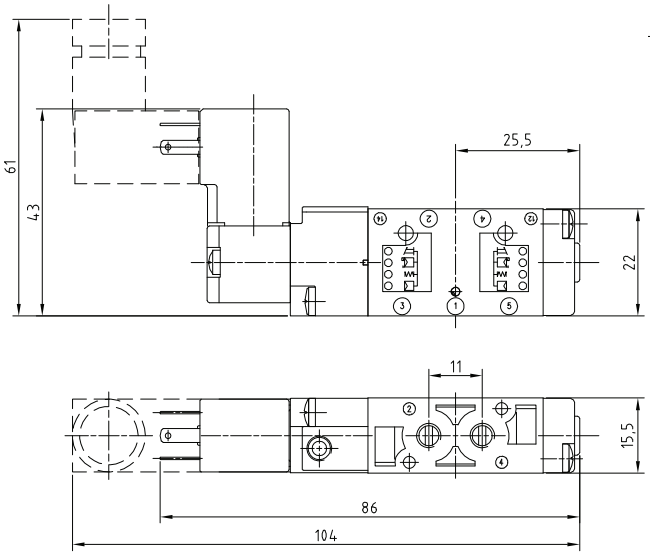

1 = Supply port
2 - 4 = Use
3 - 5 = Exhaust
14 = Control
12 = Return

Weight (Kg): 0,082

	Symbol	Control	Return	Part no.
		14	12	
5/2	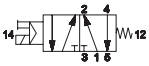	Electrical amplified	Pneumomecha-nical spring	**E-0420** **E-0470**

Solenoid valves are supplied without coil and connector

Double electrical impulse

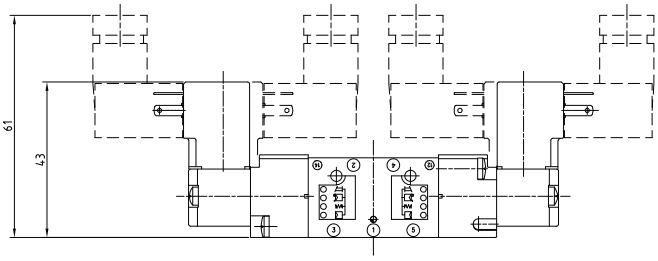

1 = Supply port
2 - 4 = Use
3 - 5 = Exhaust
14 = Control
12 = Return

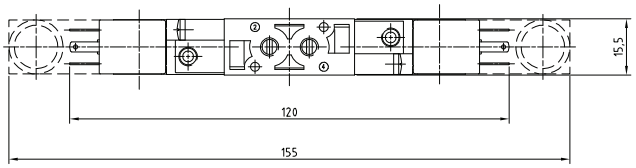

Weight (Kg): 0,066

	Symbol	Control	Return	Part no.
		14	12	
5/2	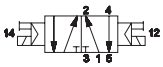	Electrical amplified	Electrical amplified	**E-0422** **E-0477**

Double electrical impulse

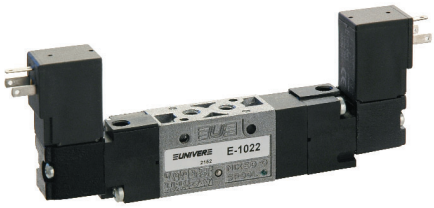

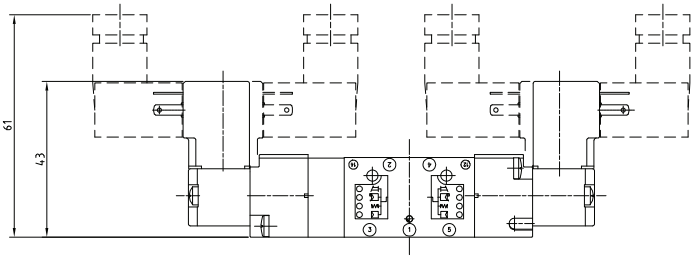

1 = Supply port
2 - 4 = Use
3 - 5 = Exhaust
14 = Control
12 = Return

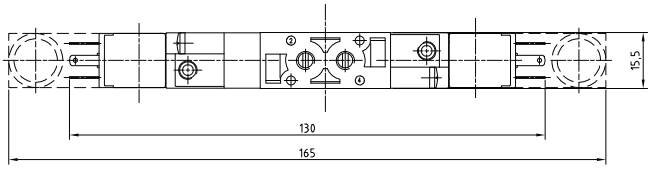

Weight (Kg): 0,066

	Symbol	Control	Return	Part no.
		14	12	
5/3 c.c.	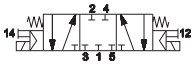	Electrical amplified	Electrical amplified	**E-0822**
5/3 o.c.	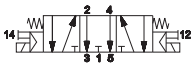	Electrical amplified	Electrical amplified	**E-0922**
5/3 p.c.	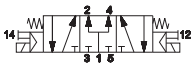	Electrical amplified	Electrical amplified	**E-1022**

o.c. = open centres **c.c.** = closed centres **p.c.** = pressurized centres

DIN C (8 mm)

For further information please contact our Sales Office

Solenoid valves are supplied without coil and connector

Lever valve

A Nr. 02 screws for plastic

1 = Supply port
2 - 4 = Use
3 - 5 = Exhaust
14 = Control
12 = Return

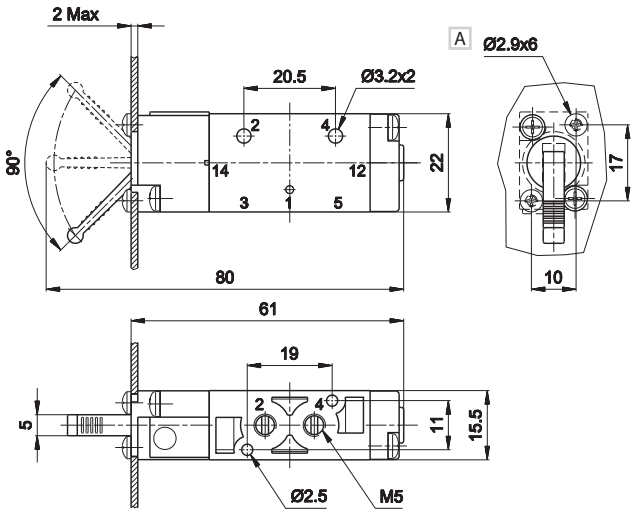

Weight (Kg): 0,068

	Symbol	Control	Return	Lever colour	Part no.
		14	12		
5/2	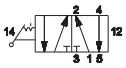	lever	lever	yellow black red	**E-15422G** **E-15422N** **E-15422R**

Push-pull valve

B Wrench 20

1 = Supply port
2 - 4 = Use
3 - 5 = Exhaust
14 = Control
12 = Return

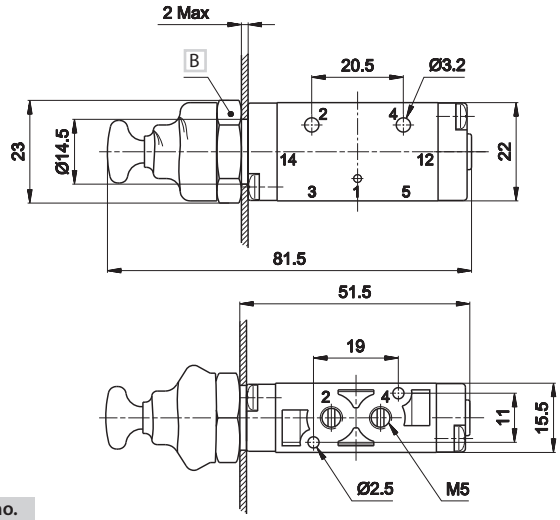

Weight (Kg): 0,082

	Symbol	Control	Return	Lever colour	Part no.
		14	12		
5/2	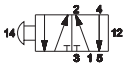	push-pull	push-pull	black	**E-15420**
5/2	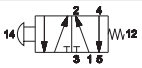	push-pull	mechanical spring	black	**E-15420A**

Tappet valve

1 = Supply port
2 - 4 = Use
3 - 5 = Exhaust
14 = Control
12 = Return

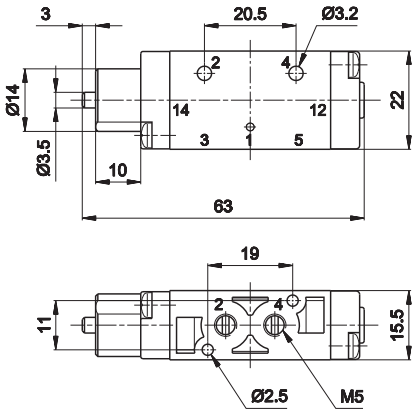

Weight (Kg): 0,066

	Symbol	Control	Return	Part no.
		14	12	
5/2	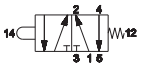	ball-push	mechanical spring	**E-15402A**

Ball-pushrod valve for mechanical screw operator

A Wrench 17

1 = Supply port
2 - 4 = Use
3 - 5 = Exhaust
14 = Control
12 = Return

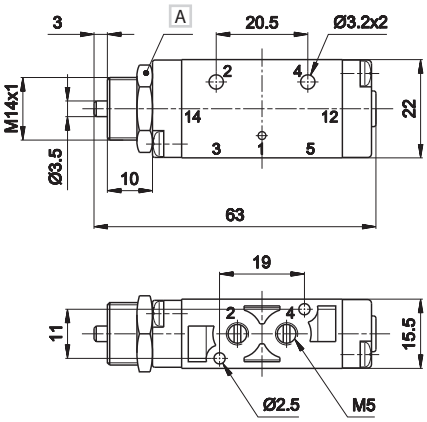

Weight (Kg): 0,066

	Symbol	Control	Return	Part no.
		14	12	
5/2	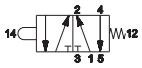	ball-pushrod	mechanical spring	**E-15403A**

PNEUMATIC AND MECHANICAL ACTUATORS

	Pneumatic actuator	AI-3550
	Amplified pneumatic actuator	AI-3551
	Roller operator 1 position	AI-3560
	Ball-push operator 1 position	AI-3562
	Omni-directional operator	AI-3563
	Roller lever operator 1 position	AI-3570
	Articulated roller lever operator 1 position Complete actuation with stroke 2,5 mm max stroke 4,7 mm	AI-3571
	Key operator 1 position	AI-3572

MANUAL ACTUATORS

	Recessed button	BLACK RED GREEN	AI-3511 AI-3512 AI-3513
	Head button	RED BLACK RED BLACK	AI-3514 AI-3516 AI-3514D AI-3516D
	Button	GREEN RED BLACK	AI-3515 AI-3517 AI-3519
	Rotating selector	BLACK BLACK	AI-3520 AI-3521
	Rotating lever selector	BLACK BLACK	AI-3522 AI-3523
	Lever	BLACK	AI-3524
	Omni-directional operator	BLACK	AI-3525
	Push-pull operator	BLACK	AI-3526

For technical features of coils and connector, see section **"Accessories>Buttons"**

Valve for mechanical operator for panel mounting

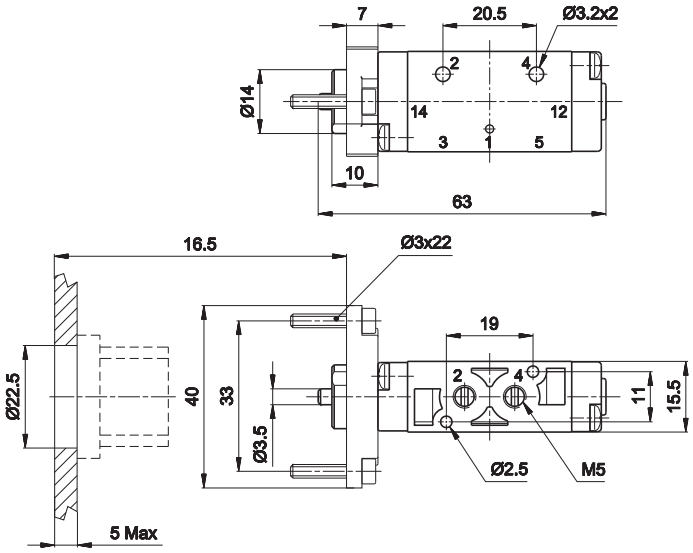

1 = Supply port
2 - 4 = Use
3 - 5 = Exhaust
14 = Control
12 = Return

Weight (Kg):	0,082

	Symbol	Control	Return	Part no.
		14	12	
5/2	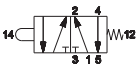	ball-push	mechanical spring	**E-15412A**

MANUAL ACTUATORS

	Recessed button	■BLACK ■RED ■GREEN	AI-3511Q AI-3512Q AI-3513Q
	Head button	■RED ■BLACK ■RED ■BLACK	AI-3514Q AI-3516Q AI-3514QD AI-3516QD
	Button	■GREEN ■RED ■BLACK	AI-3515Q AI-3517Q AI-3519Q
	Rotating selector	■BLACK ■BLACK	AI-3520Q AI-3521Q
	Rotating lever selector	■BLACK ■BLACK	AI-3522Q AI-3523Q
	Lever	■BLACK	AI-3524Q
	Omni-directional operator	■BLACK	AI-3525Q
	Push-pull operator	■BLACK	AI-3526Q

For technical features of coils and connector, see section **"Accessories>Buttons"**

F

COMPA 4 Miniature Valves

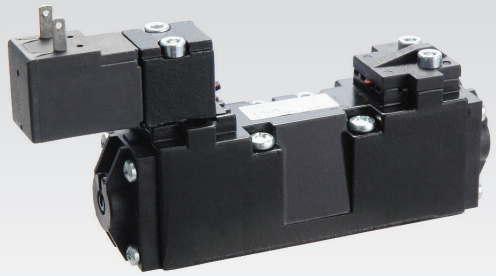

Available ATEX version upon request

CE Ex II 2Gc IIC T5 II 2Dc T100°C
CE Ex II 3 GD c nA II T5-10°C ≤ Ta ≤ 45°C

TECHNICAL CHARACTERISTICS

Ambient temperature	-10 ÷ +45 °C
Fluid temperature	-20 ÷ +50 °C
Fluid	10 µm filtered air
Commutation system	spool
Ways/Positions	**5/2**
Pressure	max 10 bar
Control	manual, mechanical
Return	mechanical spring
Connections	for sub-base
Nominal Ø	4 mm
Nominal flow rate	390 Nl/min

CONSTRUCTIVE CHARACTERISTICS

Valve body	acetalic resin
Seals	nitrile rubber
Actuators	technopolymer
Spool	aluminium

ELECTRIC CHARACTERISTICS

Electropilot/coil	A series/U05
Voltage	24 V DC -12 V DC - 24 V AC - 110 V AC - 230 V AC
	(only for version with integrated electrical connection)
Power consumption	U05 = 2 W (DC) 2,3 VA (AC) U04 = 1,2 W (DC)
Protection degree	IP65
Manual override	recessed button – 1 position

CODIFICATION KEY

F	-	0	2	2	4	
1		2		3	4	5

1 Series
F = COMPA 4 Miniature Valves

2 Type
02 = 5/2 Sub-base mounting
05 = 5/3 **c.c.** Sub-base mounting
06 = 5/3 **o.c.** Sub-base mounting
07 = 5/3 **p.c.** Sub-base mounting

3 Control 14
2 = Electrical DC
4 = Pneumatic
7 = Electrical DC/AC

4 Return 12
0 = Pneumomechanical spring
2 = Electrical DC
4 = Pneumatic impulse
7 = Electrical DC/AC

5 ATEX version
X = Atex (upon request)

See ATEX Catalogue for types and versions

o.c. = open centres **c.c.** = closed centres **p.c.** = pressurized centres

Single pneumatic impulse

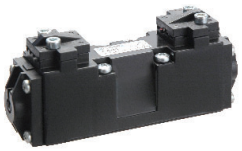

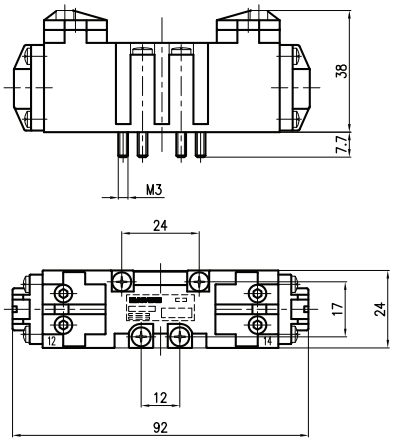

1 = Supply port
2 - 4 = Use
3 - 5 = Exhaust
14 = Control
12 = Return

Weight (Kg): 0,068

	Symbol	Control	Return	Part no.
		14	12	
5/2	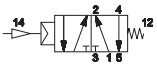	Pneumatic amplified	Pneumomecha-nical spring	**F-0240**

Double pneumatic impulse

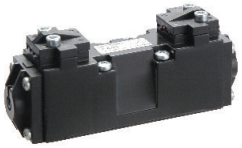

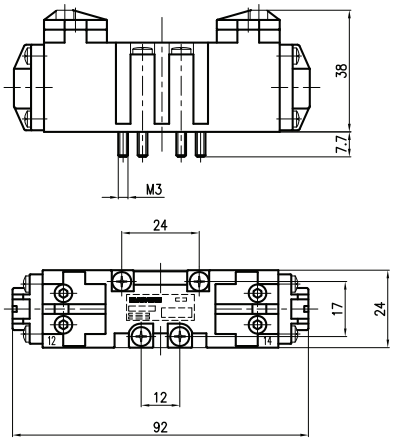

1 = Supply port
2 - 4 = Use
3 - 5 = Exhaust
14 = Control
12 = Return

Weight (Kg): 0,082

	Symbol	Control	Return	Part no.
		14	12	
5/2	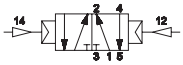	Pneumatic amplified	Pneumatic amplified	**F-0244**
5/3 c.c.	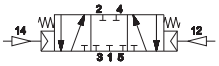	Pneumatic amplified	Pneumatic amplified	**F-0544**
5/3 o.c.	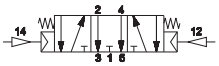	Pneumatic amplified	Pneumatic amplified	**F-0644**
5/3 p.c.	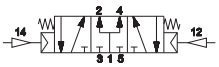	Pneumatic amplified	Pneumatic amplified	**F-0744**

o.c. = open centres **c.c.** = closed centres **p.c.** = pressurized centres

Solenoid valves are supplied without coil and connector

Single electrical impulse

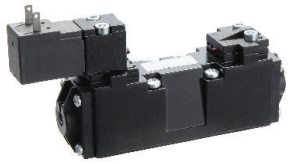

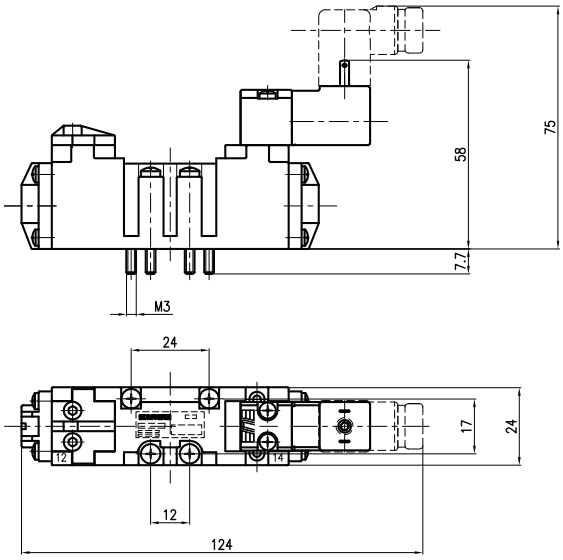

1 = Supply port
2 - 4 = Use
3 - 5 = Exhaust
14 = Control
12 = Return

Weight (Kg): 0,066

	Symbol	Control	Return	Part no.
		14	12	
5/2	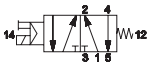	Electrical amplified	Pneumomecha-nical spring	**E-0220** **E-0270**

Double electrical impulse

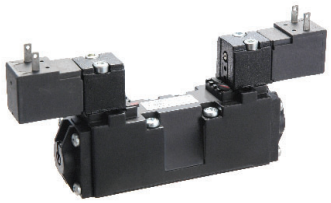

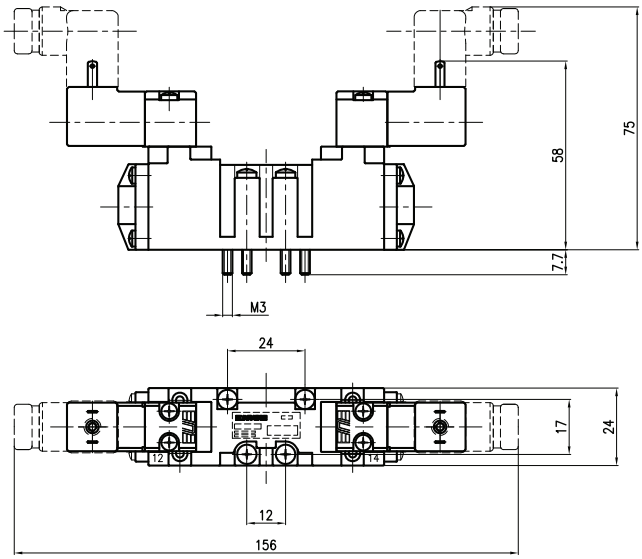

1 = Supply port
2 - 4 = Use
3 - 5 = Exhaust
14 = Control
12 = Return

Weight (Kg): 0,066

	Symbol	Control	Return	Part no.
		14	12	
5/2	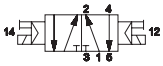	Electrical amplified	Electrical amplified	**F-0222** **F-0277**
5/3 c.c.	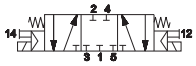	Electrical amplified	Electrical amplified	**F-0522** **F-0577**
5/3 o.c.	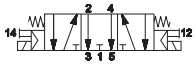	Electrical amplified	Electrical amplified	**F-0622** **F-0677**
5/3 p.c.	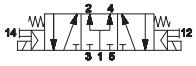	Electrical amplified	Electrical amplified	**F-0722** **F-0777**

o.c. = open centres **c.c.** = closed centres **p.c.** = pressurized centres

DIN C (8 mm)

For further information please contact our Sales Office

Solenoid valves are supplied without coil and connector

F-4500

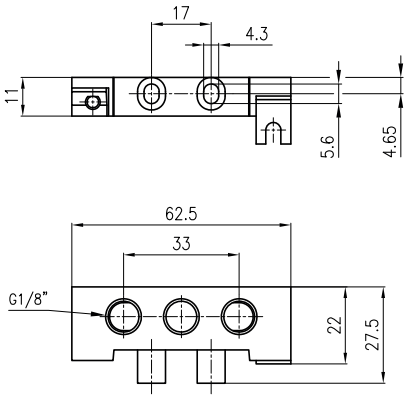

Inlet plate G1/8
material: aluminium
weight: 0,050 Kg

F-4505

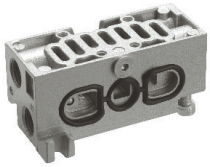

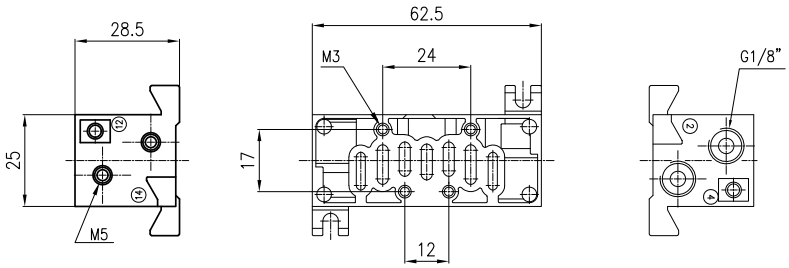

Manifold sub-base, threaded connections G1/8
material: aluminium
weight: 0,062 Kg

3

Subject to change

G-6

20 mm Valves and Solenoid Valves - Threaded body G1/8

- G1/8 threaded valve body with traditional Univer spool system
- Version with integrated electrical connection and esternal connection
- Compact design
- High flow rate
- Versions available: 5/2 - 5/3 - 3/2+3/2

Available ATEX version upon request

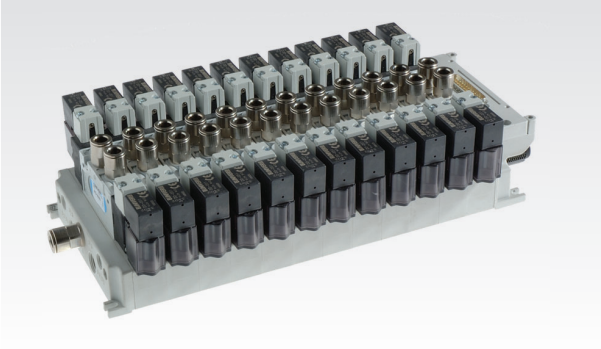

TECHNICAL CHARACTERISTICS

Ambient temperature	-5 ÷ +50 °C
Fluid temperature	Max +50 °C
Fluid	50 µm filtered air, with or without lubrication
Commutation system	spool
Ways/Positions	**5/2, 5/3, 3/2+3/2**
Pressure	1,5 ÷ 9 bar
Control	indirect electro-pneumatic, pneumatic
Return	mechanical spring, pneumomechanical spring
Connections	G1/8
Nominal Ø	5 mm
Nominal flow rate (Nl/min)	5/2 = **770** 5/3 = **700** 3/2+3/2 = **670**

CONSTRUCTIVE CHARACTERISTICS

Valve body	zamak
Seals	nitrile rubber
Subbase and actuators	self-extinguishing technopolymer
Spool	aluminum

ELECTRIC CHARACTERISTICS

Electropilot/coil	A series/U05 - B series/U04
Voltage	24 V DC -12 V DC - 24 V AC - 110 V AC - 230 V AC (only for version with integrated electrical connection)
Power consumption	U05 = 2 W (DC) 2,3 VA (AC) U04 = 1,2 W (DC)
Protection degree	IP65
Manual override	recessed button – 1 position

CODIFICATION KEY

G	-	6	6	4	4		
1			2	3	4	5	6

1 Series

G-6 = 20 mm Valves and solenoid valves - threaded body G1/8

2 Type

2 = 5/2
3 = 5/3 c.c.
4 = 5/3 o.c.
5 = 5/3 p.c.
6 = 3/2+3/2 NC-NC
7 = 3/2+3/2 NC-NO
8 = 3/2+3/2 NO-NO

3 Control 14

3 = Pneumatic amplified
4 = Electrical amplified DC
5 = Electrical amplified DC/AC
6 = Electrical amplified DC (B series 10mm electropilot)

4 Return 12

0 = Pneumomechanical spring
1 = Mechanical spring
3 = Pneumatic amplified
4 = Electrical amplified DC
5 = Electrical amplified DC/AC
6 = Electrical amplified DC (B series 10 mm electropilot)

5 Option

D = External servoassisted pilot

6 ATEX version

X = Atex (upon request)

See ATEX Catalogue for types and versions

o.c. = open centres **c.c.** = closed centres **p.c.** = pressurized centres

Subject to change

Single electric impulse

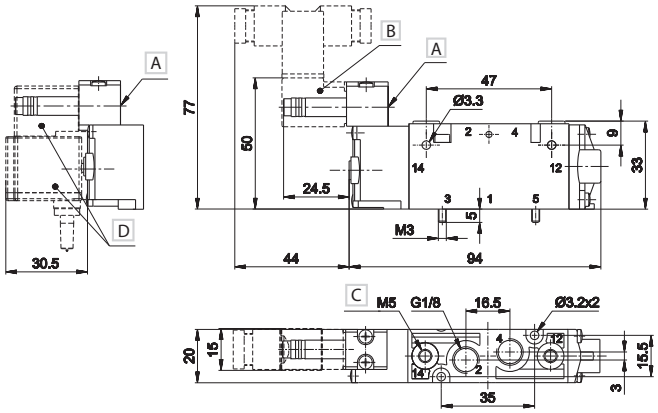

A Manual override
B Coil with connector for single connection
C External servoassisted pilot
D Coil with intergrated connector for multipolar version **DD-051-2C/DD-040-2C**

1 = Supply port
2 - 4 = Use
3 - 5 = Exhaust
14 = Control
12 = Return

	Symbol	Control 14	Return 12	Flow rate (Nl/min)	Pressure bar	Resp. Time (ms) En.	Resp. Time (ms) De-en.	Weight Kg	Part no.
5/2	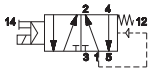	electrical amplified	pneumomechanical spring	770	1,5÷9	21	30	0,112	G-6240 G-6250
5/2	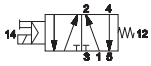	electrical amplified	mechanical spring	770	1,5÷9	18	64	0,112	G-6241 G-6251

Double electric impulse

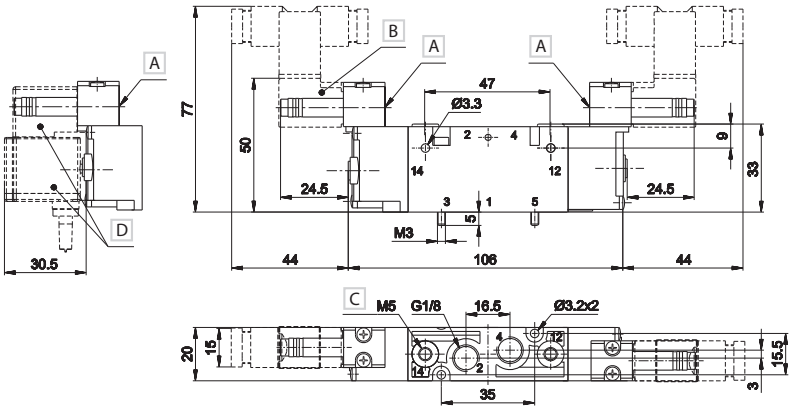

A Manual override
B Coil with connector for single connection
C External servoassisted pilot
D Coil with intergrated connector for multipolar version **DD-051-2C/DD-040-2C**

1 = Supply port
2 - 4 = Use
3 - 5 = Exhaust
14 = Control
12 = Return

	Symbol	Control 14	Return 12	Flow rate (Nl/min)	Pressure bar	Resp. Time (ms) En.	Resp. Time (ms) De-en.	Weight Kg	Part no.
5/2	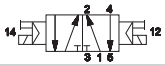	electrical amplified	electrical amplified	770	0,6÷9	16	16	0,143	G-6244 G-6255
5/3 c.c.	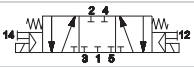	electrical amplified	electrical amplified	700	1,9÷9	16	47	0,148	G-6344 G-6355
5/3 o.c.	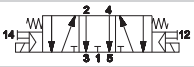	electrical amplified	electrical amplified	700	2,0÷9	16	47	0,148	G-6444 G-6455
5/3 p.c.	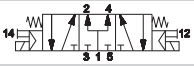	electrical amplified	electrical amplified	700	1,9÷9	16	47	0,148	G-6544 G-6555
3/2 NC + 3/2 NC	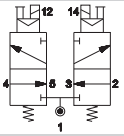	electrical amplified	electrical amplified	670	1,5÷9	14	17	0,140	G-6644 G-6655
3/2 NC + 3/2 NO	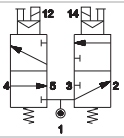	electrical amplified	electrical amplified	670	1,5÷9	14	17	0,140	G-6744 G-6755
3/2 NO + 3/2 NO	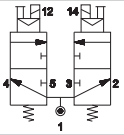	electrical amplified	electrical amplified	670	1,5÷9	14	17	0,140	G-6844 G-6855

o.c. = open centres **c.c.** = closed centres **p.c.** = pressurized centres
Solenoid valves are supplied without coil and connector

Single electric impulse

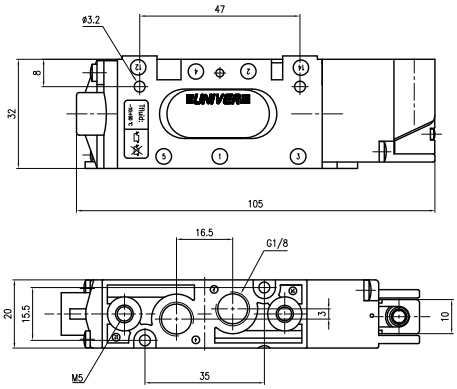

A Manual override
B Coil with connector for single connection
C External servoassisted pilot

1 = Supply port
2 - 4 = Use
3 - 5 = Exhaust

14 = Control
12 = Return

	Symbol	Control 14	Return 12	Flow rate (Nl/min)	Pressure bar	Resp. Time (ms) En.	Resp. Time (ms) De-en.	Weight Kg	Part no.
5/2	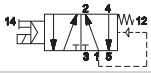	electrical amplified	pneumomechanical spring	770	1,5÷9	21	30	0,112	**G-6260** **G-6261**

Double electric impulse

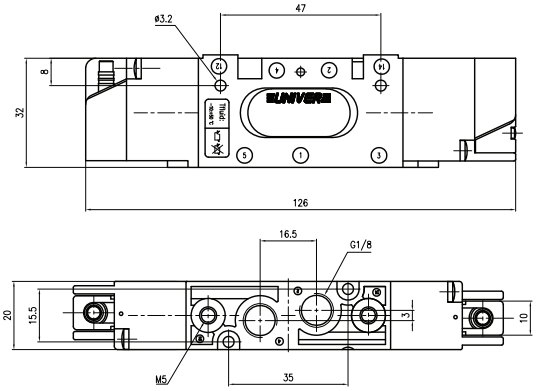

A Manual override
B Coil with connector for single connection
C External servoassisted pilot

1 = Supply port
2 - 4 = Use
3 - 5 = Exhaust

14 = Control
12 = Return

	Symbol	Control 14	Return 12	Flow rate (Nl/min)	Pressure bar	Resp. Time (ms) En.	Resp. Time (ms) De-en.	Weight Kg	Part no.
5/2	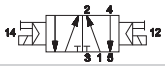	electrical amplified	electrical amplified	770	0,6÷9	16	16	0,143	**G-6266**
5/3 c.c.	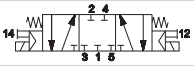	electrical amplified	electrical amplified	700	1,9÷9	16	47	0,148	**G-6366**
5/3 o.c.	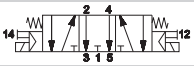	electrical amplified	electrical amplified	700	2,0÷9	16	47	0,148	**G-6466**
5/3 p.c.	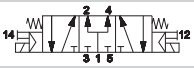	electrical amplified	electrical amplified	700	1,9÷9	16	47	0,148	**G-6566**
3/2 NC + 3/2 NC	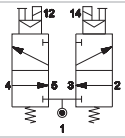	electrical amplified	electrical amplified	670	1,5÷9	14	17	0,140	**G-6666**
3/2 NC + 3/2 NO	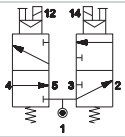	electrical amplified	electrical amplified	670	1,5÷9	14	17	0,140	**G-6766**
3/2 NO + 3/2 NO	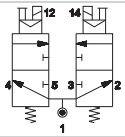	electrical amplified	electrical amplified	670	1,5÷9	14	17	0,140	**G-6866**

o.c. = open centres **c.c.** = closed centres **p.c.** = pressurized centres
Solenoid valves are supplied without coil and connector

Single pneumatic impulse

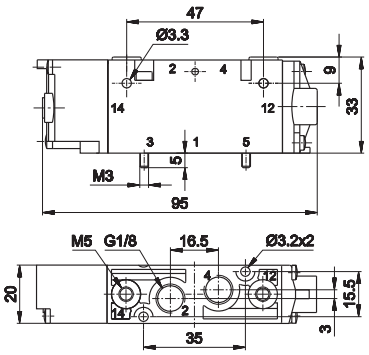

1 = Supply port
2 - 4 = Use
3 - 5 = Exhaust
14 = Control
12 = Return

	Symbol	Control 14	Return 12	Flow rate (Nl/min)	Pressure bar	Resp. Time (ms) En.	Resp. Time (ms) De-en.	Weight Kg	Part no.
5/2	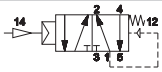	pneumatic amplified	pneumomechanical spring	770	1,5÷10	7	16	0,092	**G-6230**
5/2	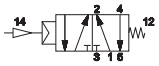	pneumatic amplified	mechanical spring	770	1,5÷10	6	18	0,092	**G-6231**

Double pneumatic impulse

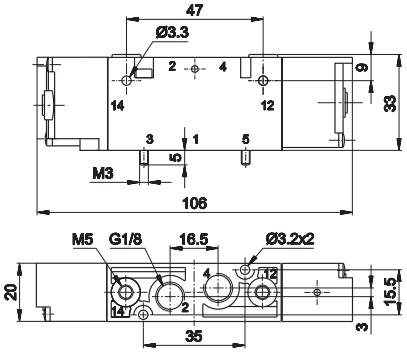

1 = Supply port
2 - 4 = Use
3 - 5 = Exhaust
14 = Control
12 = Return

	Symbol	Control 14	Return 12	Flow rate (Nl/min)	Pressure bar	Resp. Time (ms) En.	Resp. Time (ms) De-en.	Weight Kg	Part no.
5/2	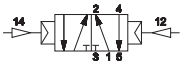	pneumatic amplified	pneumatic amplified	770	0,7÷10	5	5	0,103	**G-6233**
5/3 c.c.	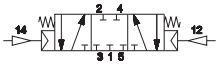	pneumatic amplified	pneumatic amplified	700	1,9÷9	6	19	0,192	**G-6333**
5/3 o.c.	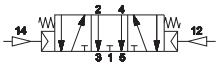	pneumatic amplified	pneumatic amplified	700	2,0÷9	6	19	0,192	**G-6433**
5/3 p.c.	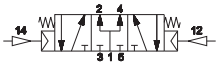	pneumatic amplified	pneumatic amplified	700	1,9÷9	6	19	0,192	**G-6533**
3/2 NC + 3/2 NC	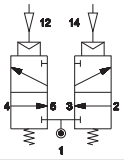	pneumatic amplified	pneumatic amplified	670	1,5÷9	3	14	0,188	**G-6633**
3/2 NC + 3/2 NO	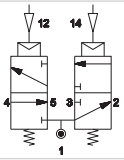	pneumatic amplified	pneumatic amplified	670	1,5÷9	3	14	0,188	**G-6733**
3/2 NO + 3/2 NO	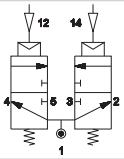	pneumatic amplified	pneumatic amplified	670	1,5÷9	3	14	0,188	**G-6833**

o.c. = open centres **c.c.** = closed centres **p.c.** = pressurized centres

Multipin electrical connection

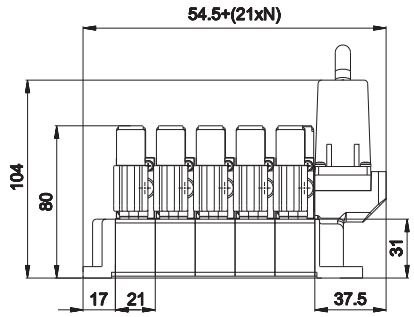

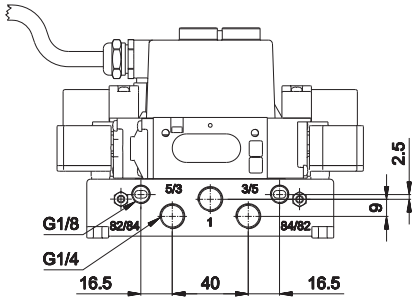

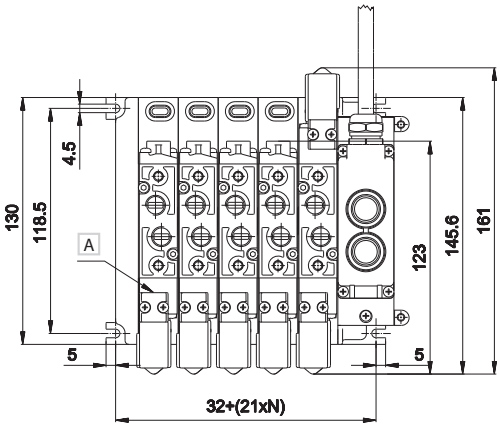

A Manual override

1 = Supply port
5/3 - 3/5 = Exhaust G1/4
82/84 - 84/82 = Electropilot exhaust G1/8

N = Number of valve positions

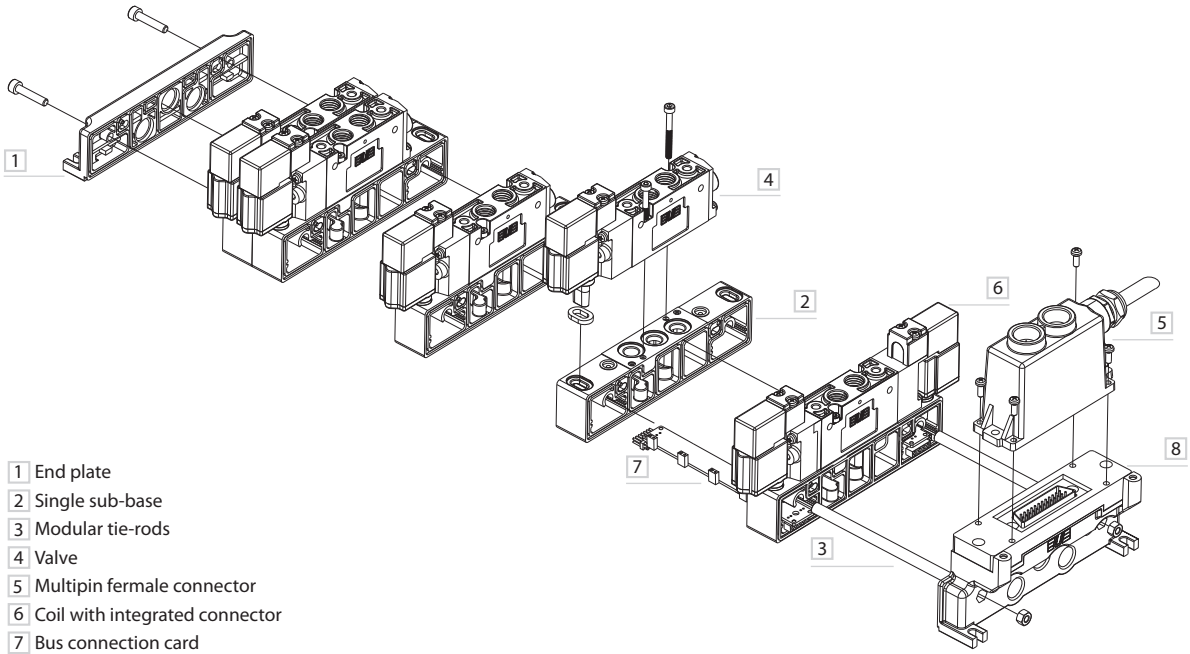

1 End plate
2 Single sub-base
3 Modular tie-rods
4 Valve
5 Multipin fermale connector
6 Coil with integrated connector
7 Bus connection card
8 End plate with modular connection

Tightening torque for fittings

Thread	Max torque (Nm)
M5	3
M7	3
G1/8	3
G1/4	10

Electrical connection with external connector

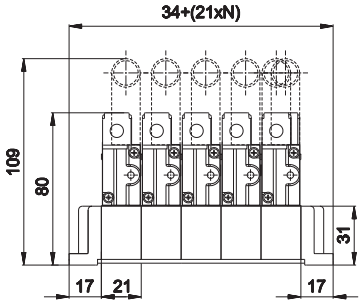

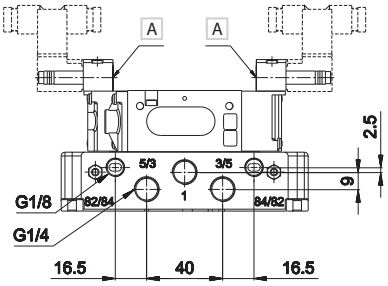

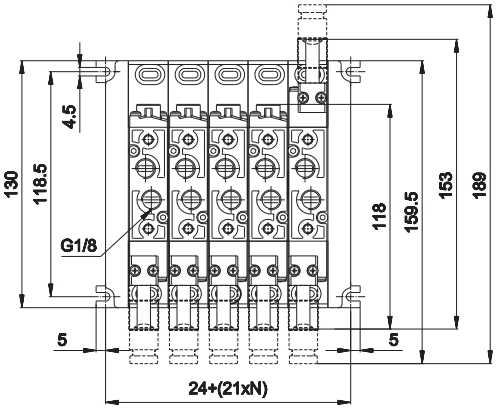

A Manual override

1 = Supply port
5/3 - 3/5 = Exhaust G1/4
82/84 - 84/82 = Electropilot exhaust G1/8

N = Number of valve positions

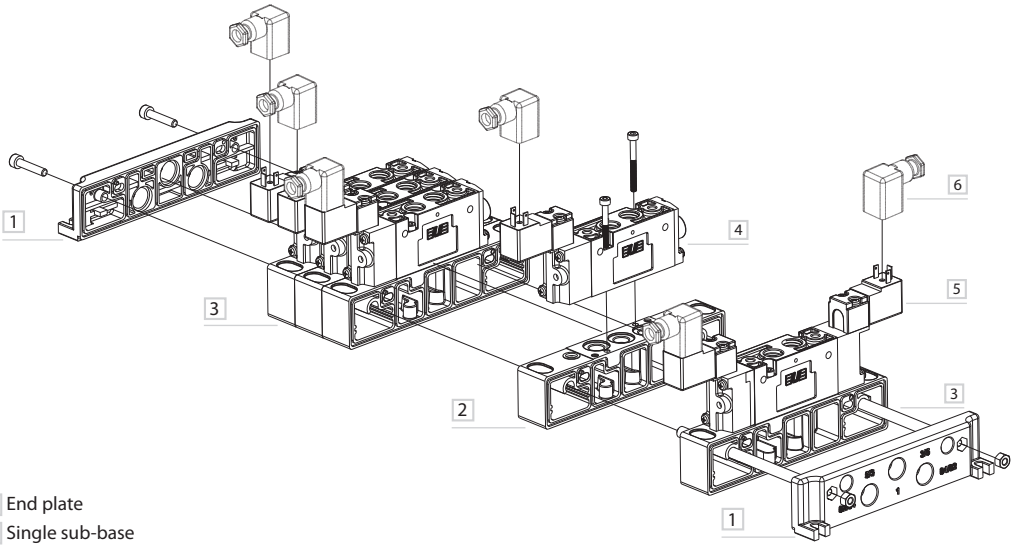

1 End plate
2 Single sub-base
3 Modular tie-rods
4 Valve
5 Coil
6 Single connector

Tightening torque for fittings

Thread	Max torque (Nm)
M5	3
M7	3
G1/8	3
G1/4	10

Electrical connection with loose cables

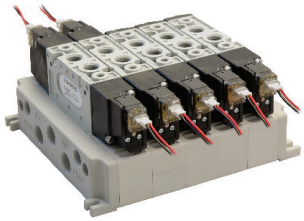

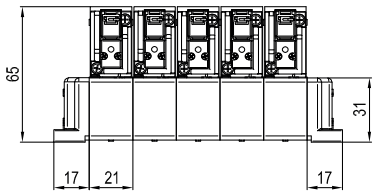

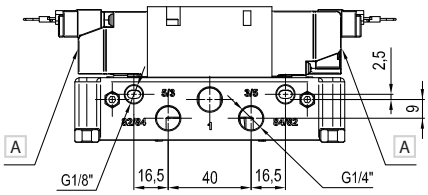

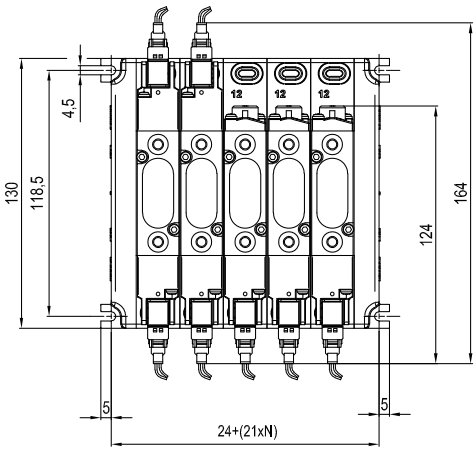

A Manual override

1 = Supply port
5/3 - 3/5 = Exhaust G1/4
82/84 - 84/82 = Electropilot exhaust G1/8

N = Number of valve positions

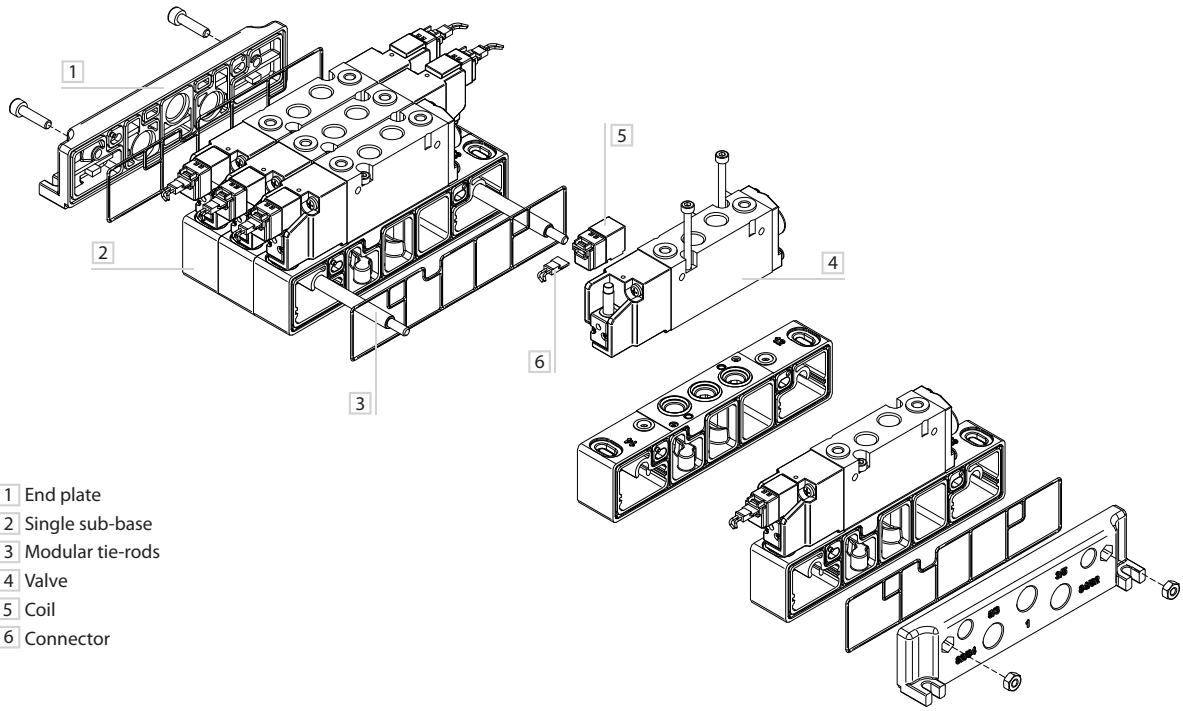

1 End plate
2 Single sub-base
3 Modular tie-rods
4 Valve
5 Coil
6 Connector

Tightening torque for fittings

Thread	Max torque (Nm)
M5	3
M7	3
G1/8	3
G1/4	10

GP-6100

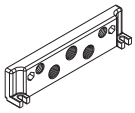

threaded end plate
weight: 0,046 Kg

GP-6110

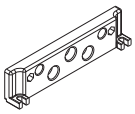

blank end plate
weight: 0,050 Kg

GP-611212

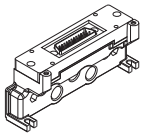

threaded end plate with
male connector
25 poles 12+12 coils
control 12-14
weight: 0,100 Kg

GP-611806

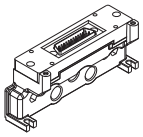

threaded end plate with
male connector
25 poles
18 coils control 14
6 coils control 12
(only for control 14
more than 12 coils max 18)
weight: 0,102 Kg

GP-6310/1/2

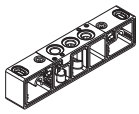

sub-base with
open diaphragms
GP-6310 without
electrical connection
GP-6311 monostable
GP-6312 bistable
weight: 0,060 Kg

GP-6320/1/2

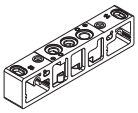

sub-base with
closed diaphragms
GP-6320 without
electrical connection
GP-6321 monostable
GP-6322 bistable
weight: 0,062 Kg

GP-6330/1/2

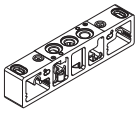

3 1 5

sub-base with
closed supply and
open exhausts
GP-6330 without
electrical connection
GP-6331 mostable
GP-6332 bistable
weight: 0,062 Kg

GP-6340/1/2

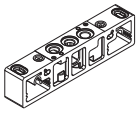

3 1 5

sud-base with
open supply and
closed exhausts
GP-6340 without
electrical connection
GP-6341 mostable
GP-6342 bistable
weight: 0,062 Kg

GP-6380

intermediate supply plate
(to be used only with
GP-63... series sub-base)
weight: 0,036 Kg

GP-6385

closing plate for
unused station
weight: 0,018 Kg

GP-6400-1

modular tie-rod
1 valve place
weight: 0,004 Kg
(package100 pcs.)

GP-6400-2

modular tie-rod
2 valve places
weight: 0,010 Kg
(package100 pcs.)

GP-6400-5

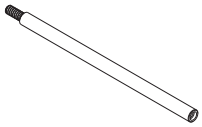

modular tie-rod
5 valve places
weight: 0,022 Kg
(package100 pcs.)

AZ4-VN0416 screw M04x16 for tie-rods (package100 pcs.)
AZ4-SN004A hexagonal nut M4 (package100 pcs.)

GP-6512-01/..MF

BUS connection card
control side 12 with 12 pin
GP-6512-01MF 1 place
GP-6512-02MF 2 places
GP-6512-03MF 3 places
GP-6512-05MF 5 places
GP-6512-06MF 6 places
weight: 0,003 Kg
(for each place)

GP-6514-01/..MF

BUS connection card
control side 14 with 12 pin
GP-6514-01MF 1 place
GP-6514-02MF 2 places
GP-6514-03MF 3 places
GP-6514-05MF 5 places
GP-6514-06MF 6 places
weight: 0,003 Kg
(for each place)

GP-651418

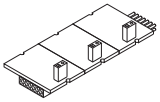

BUS connection card
control side 14 with 18 pins
(only 12 places)
for manifolds with
control 14 and more than 12
coils up to 18 coils use
GP-651418 card 12 places
and then **GP-6514-...**
weight: 0,003 Kg
(for each place)

upon request customized solutions up to 12 places

DD-...

24 V CC 2 W coil
for single connection
weight: 0,019 Kg

DD-051-2C/DD-040-2C

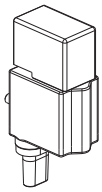

24 V CC 2 W coil
with integrated connector
for multipin version
weight: 0,028 Kg

DE-652I

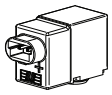

24 V DC 1,35 W coil
with in-line connector
with protection for a
complete tightness
weight: 0,013 Kg

D-530-30/50/200

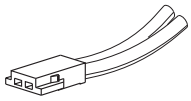

Miniature connector with loose cables

D-530-30 = wire length 300 mm
D-530-50 = wire length 500 mm
D-530-200 = wire length 2000 mm

Electrical connections

AM-5109

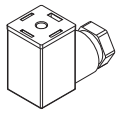

- 15 mm connector

TSCF24S0300
TSCF24S0500
TSCF24S1000

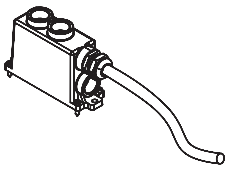

- flying fermale connector sub D
  according to CEI 20-22 O.R. II
  (upon request)
  prewired for 24 coils
  M3 x 12 fixing screws

Colour identification according to standard **DIN 47100**

Female connector **D-SUB 25 poles**
for **12+12 coils**

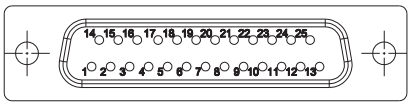

PIN No.	Colour	Coil	Control side GP-611212	Control side GP-611806	Valve No.
1	white	1	14	14	1
2	brown	2	12	12	1
3	green	3	14	14	2
4	yellow	4	12	12	2
5	grey	5	14	14	3
6	pink	6	12	12	3
7	blue	7	14	14	4
8	red	8	12	12	4
9	black	9	14	14	5
10	violet	10	12	12	5
11	grey-pink	11	14	14	6
12	red-blue	12	12	12	6
13	white-green	13	14	14	7
14	brown-green	14	12	14	7
15	white-yellow	15	14	14	8
16	yellow-brown	16	12	14	8
17	white-grey	17	14	14	9
18	grey-brown	18	12	14	9
19	white-pink	19	14	14	10
20	pink-brown	20	12	14	10
21	white-blue	21	14	14	11
22	brown-blue	22	12	14	11
23	white-red	23	14	14	12
24	brown-red	common	-	-	-
25	white-black	24	12	14	12

GL-6

20 mm G1/8 Valves and solenoid valves for base assembly

- Valve body for base assembly with traditional Univer spool system
- Version with integrated electrical connection and external connection
- Compact design
- High flow rate
- Versions available: 5/2 - 5/3 - 3/2+3/2

Available ATEX version upon request

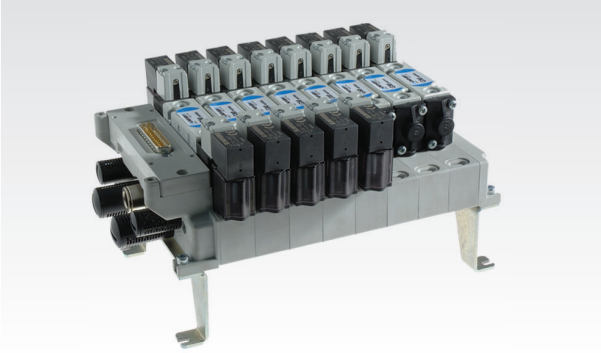

TECHNICAL CHARACTERISTICS

Ambient temperature	-5 ÷ +50 °C
Fluid temperature	Max +50 °C
Fluid	50 µm filtered air, with or without lubrication
Commutation system	spool
Ways/Positions	**5/2, 5/3, 3/2+3/2**
Pressure	1,5 ÷ 9 bar
Control	indirect electro-pneumatic, pneumatic
Return	mechanical spring, pneumomechanical spring
Connections	sub-base interface
Nominal Ø (mm)	5 mm
Nominal flow rate (Nl/min)	

according to the type of fittings		**5/2**	**5/3**	**3/2+3/2**
	straight tube Ø8 mm	740	670	640
	90° tube Ø8 mm	620	550	520
	straight tube Ø6 mm	510	510	510
	90° tube Ø6 mm	370	370	370
	straight tube Ø4 mm	200	200	200
	90° tube Ø4 mm	140	140	140

CONSTRUCTIVE CHARACTERISTICS

Valve body	zamak
Seals	nitrile rubber
Subbase and actuators	self-extinguishing technopolymer
Spool	aluminum

ELECTRIC CHARACTERISTICS

Electropilot/coil	A series/U05 - B series/U04
Voltage	24 V DC -12 V DC - 24 V AC - 110 V AC - 230 V AC (only version with external connection)
Power consumption	U05 = 2 W (DC) 2,3 VA (AC) U04 = 1,2 W (DC)
Protection degree	IP65
Manual override	recessed button - 1 position

CODIFICATION KEY

G	L	-	6	6	4	4		
1				2	3	4	5	6

1 Series

GL-6 = 20 mm Valves and Solenoid Valves for sub-base mounting

2 Type

2 = 5/2
3 = 5/3 c.c.
4 = 5/3 o.c.
5 = 5/3 p.c.
6 = 3/2+3/2 NC-NC
7 = 3/2+3/2 NC-NO
8 = 3/2+3/2 NO-NO

3 Control 14

3 = Pneumatic amplified
4 = Electrical amplified DC
5 = Electrical amplified DC/AC
6 = Electrical amplified DC (B series 10mm electropilot)

4 Return 12

0 = Pneumomechanical spring
1 = Mechanical spring
3 = Pneumatic amplified
4 = Electrical amplified DC
5 = Electrical amplified DC/AC
6 = Electrical amplified DC (B series10 mm electropilot)

5 Option

D = External servoassisted pilot

6 ATEX version

X = Atex (upon request)

See ATEX Catalogue for types and versions

o.c. = open centres **c.c.** = closed centres **p.c.** = pressurized centres

Subject to change

Single electric impulse

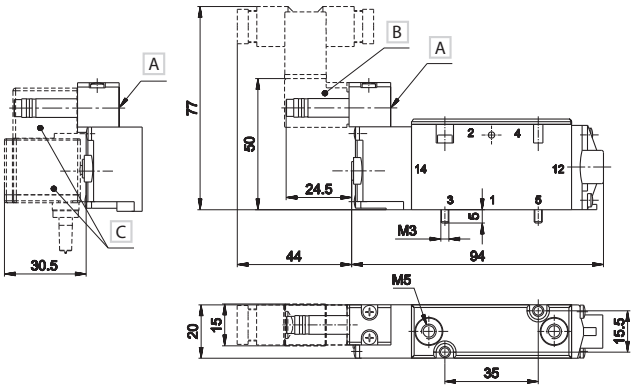

A Manual override
B Coil with connector for single connection
C Coil with intergrated connector for multipolar version **DD-051-2C/DD-040-2C**

1 = Supply port
2 - 4 = Use
3 - 5 = Exhaust

14 = Control
12 = Return

	Symbol	Control 14	Return 12	Flow rate (Nl/min)	Pressure bar	Resp. Time (ms) En.	Resp. Time (ms) De-en.	Weight Kg	Part no.
5/2	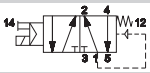	electrical amplified	spring pneumomechanical	740	1,5÷9	21	30	0,112	**GL-6240** **GL-6250**
5/2	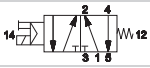	electrical amplified	spring mechanical	740	1,5÷9	18	64	0,112	**GL-6241** **GL-6251**

Double electric impulse

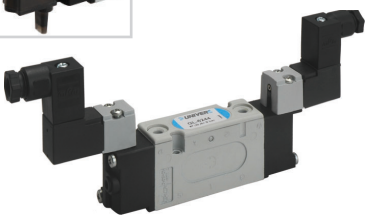

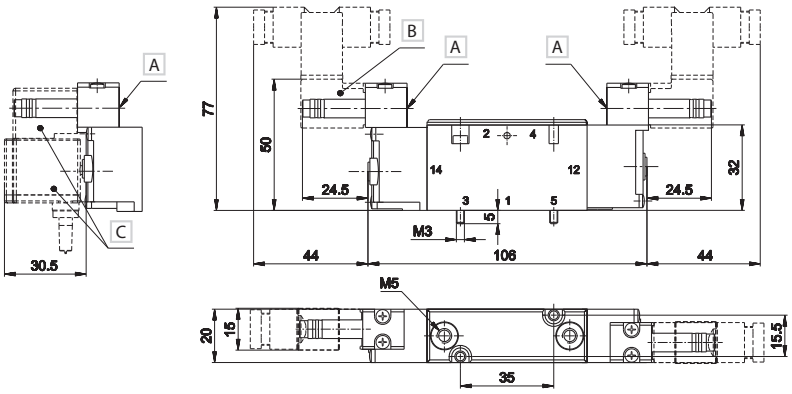

A Manual override
B Coil with connector for single connection
C Coil with intergrated connector for multipolar version **DD-051-2C/DD-040-2C**

1 = Supply port
2 - 4 = Use
3 - 5 = Exhaust

14 = Control
12 = Return

	Symbol	Control 14	Return 12	Flow rate (Nl/min)	Pressure bar	Resp. Time (ms) En.	Resp. Time (ms) De-en.	Weight Kg	Part no.
5/2	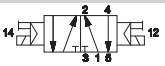	electrical amplified	electrical amplified	740	0,6÷9	16	16	0,143	**GL-6244** **GL-6255**
5/3 c.c.	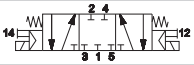	electrical amplified	electrical amplified	670	1,5÷9	16	47	0,148	**GL-6344** **GL-6355**
5/3 o.c.	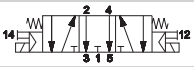	electrical amplified	electrical amplified	670	2,0÷9	16	47	0,148	**GL-6444** **GL-6455**
5/3 p.c.	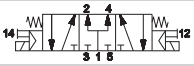	electrical amplified	electrical amplified	670	1,5÷9	16	47	0,148	**GL-6544** **GL-6555**
3/2 NC + 3/2 NC	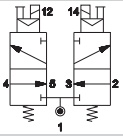	electrical amplified	electrical amplified	640	1,5÷9	14	17	0,140	**GL-6644** **GL-6655**
3/2 NC + 3/2 NO	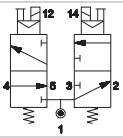	electrical amplified	electrical amplified	640	1,5÷9	14	17	0,140	**GL-6744** **GL-6755**
3/2 NO + 3/2 NO	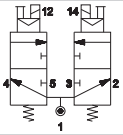	electrical amplified	electrical amplified	640	1,5÷9	14	17	0,140	**GL-6844** **GL-6855**

o.c. = open centres **c.c.** = closed centres **p.c.** = pressurized centres
Solenoid valves are supplied without coil and connector

Single electric impulse

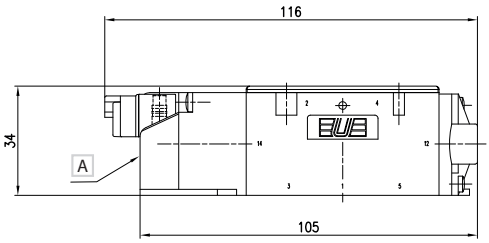

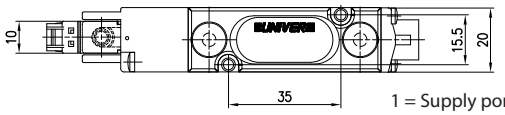

A Manual override

1 = Supply port
2 - 4 = Use
3 - 5 = Exhaust

14 = Control
12 = Return

	Symbol	Control 14	Return 12	Flow rate (Nl/min)	Pressure bar	Resp. Time (ms) En.	Resp. Time (ms) De-en.	Weight Kg	Part no.
5/2	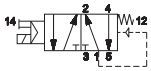	electrical amplified	pneumomechanical spring	740	1,5÷9	21	30	0,112	**GL-6260** **GL-6261**

Double electric impulse

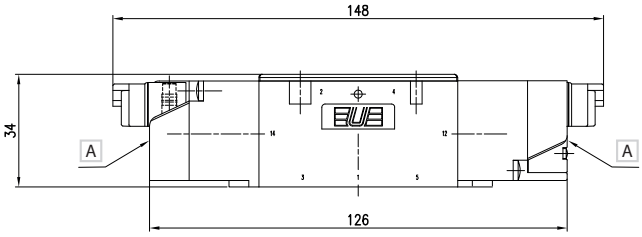

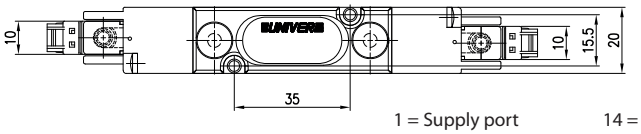

A Manual override

1 = Supply port
2 - 4 = Use
3 - 5 = Exhaust

14 = Control
12 = Return

	Symbol	Control 14	Return 12	Flow rate (Nl/min)	Pressure bar	Resp. Time (ms) En.	Resp. Time (ms) De-en.	Weight Kg	Part no.
5/2	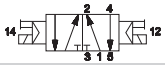	electrical amplified	electrical amplified	740	0,6÷9	16	16	0,143	**GL-6266**
5/3 c.c.	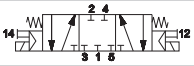	electrical amplified	electrical amplified	670	1,5÷9	16	47	0,148	**GL-6366**
5/3 o.c.	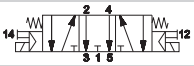	electrical amplified	electrical amplified	670	2,0÷9	16	47	0,148	**GL-6466**
5/3 p.c.	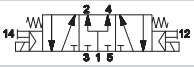	electrical amplified	electrical amplified	670	1,5÷9	16	47	0,148	**GL-6566**
3/2 NC + 3/2 NC	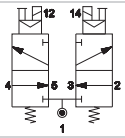	electrical amplified	electrical amplified	640	1,5÷9	14	17	0,140	**GL-6666**
3/2 NC + 3/2 NO	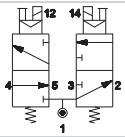	electrical amplified	electrical amplified	640	1,5÷9	14	17	0,140	**GL-6766**
3/2 NO + 3/2 NO	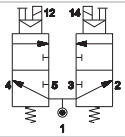	electrical amplified	electrical amplified	640	1,5÷9	14	17	0,140	**GL-6866**

o.c. = open centres **c.c.** = closed centres **p.c.** = pressurized centres

Solenoid valves are supplied without coil and connector

Single pneumatic impulse

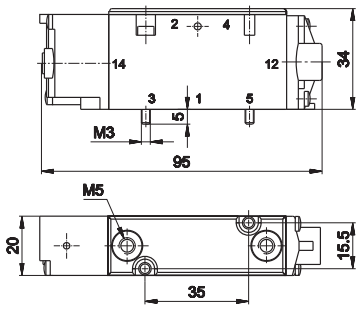

1 = Supply port
2 - 4 = Use
3 - 5 = Exhaust
14 = Control
12 = Return

	Symbol	Control 14	Return 12	Flow rate (Nl/min)	Pressure bar	Resp. Time (ms) En.	Resp. Time (ms) De-en.	Weight Kg	Part no.
5/2	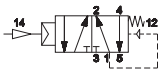	pneumatic amplified	pneumomechanical spring	740	1,5÷10	7	16	0,092	**GL-6230**
5/2	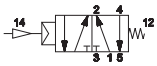	pneumatic amplified	mechanical spring	740	0,9÷10	6	18	0,092	**GL-6231**

Double pneumatic impulse

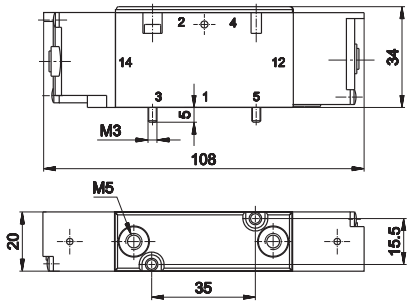

1 = Supply port
2 - 4 = Use
3 - 5 = Exhaust
14 = Control
12 = Return

	Symbol	Control 14	Return 12	Flow rate (Nl/min)	Pressure bar	Resp. Time (ms) En.	Resp. Time (ms) De-en.	Weight Kg	Part no.
5/2	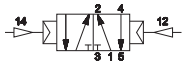	pneumatic amplified	pneumatic amplified	740	0,7÷10	5	5	0,103	**GL-6233**
5/3 c.c.	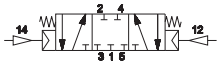	pneumatic amplified	pneumatic amplified	670	1,5÷9	6	19	0,192	**GL-6333**
5/3 o.c.	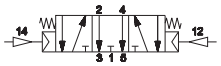	pneumatic amplified	pneumatic amplified	670	2,0÷9	6	19	0,192	**GL-6433**
5/3 p.c.	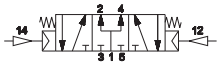	pneumatic amplified	pneumatic amplified	670	1,5÷9	6	19	0,192	**GL-6533**
3/2 NC + 3/2 NC	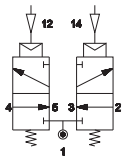	pneumatic amplified	pneumatic amplified	640	1,5÷9	3	14	0,188	**GL-6633**
3/2 NC + 3/2 NO	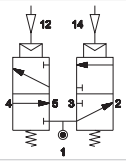	pneumatic amplified	pneumatic amplified	640	1,5÷9	3	14	0,188	**GL-6733**
3/2 NO + 3/2 NO	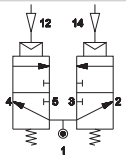	pneumatic amplified	pneumatic amplified	640	1,5÷9	3	14	0,188	**GL-6833**

o.c. = open centres **c.c.** = closed centres **p.c.** = pressurized centres

Multipin electrical connection

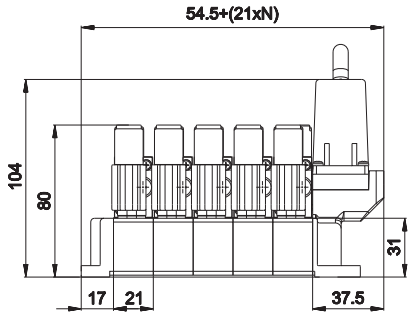

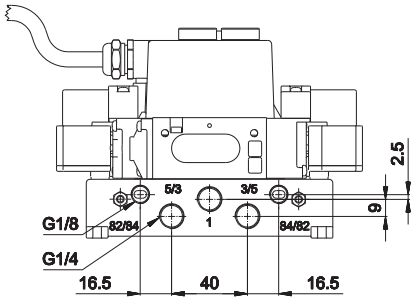

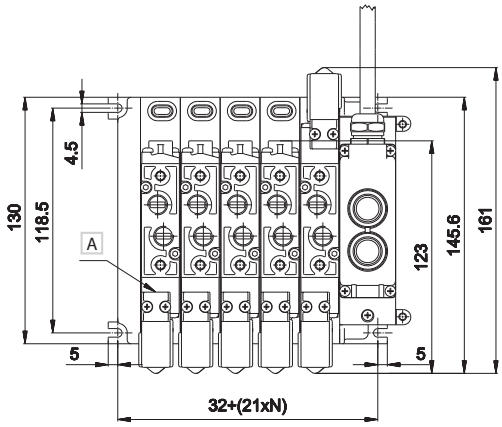

A Manual override

1 = Supply port
2 - 4 = Use
5/3 - 3/5 = Exhaust G1/4
82/84 - 84/82 = Electropilots exhaust G1/8

N = Number of valve positions

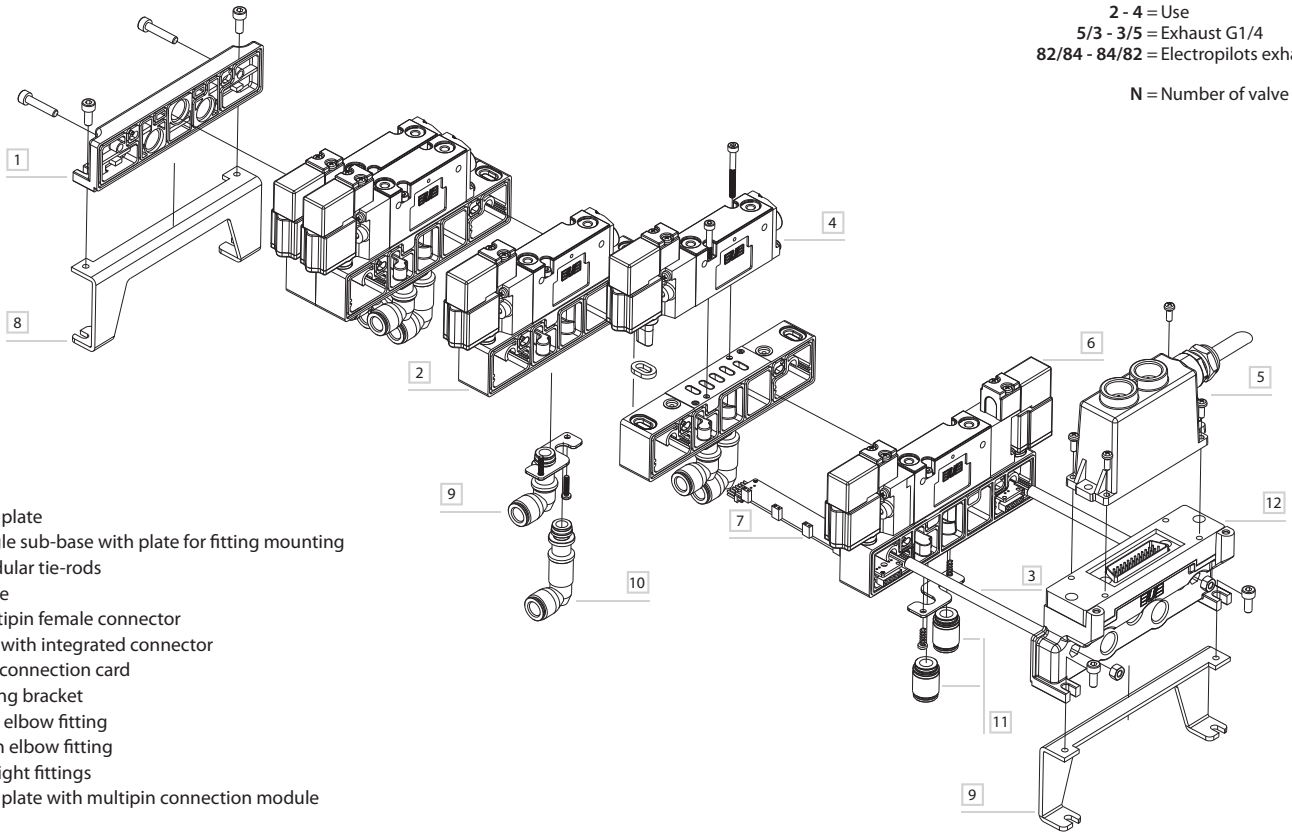

1 End plate
2 Single sub-base with plate for fitting mounting
3 Modular tie-rods
4 Valve
5 Multipin female connector
6 Coil with integrated connector
7 Bus connection card
8 Lifting bracket
9 Low elbow fitting
10 High elbow fitting
11 Straight fittings
12 End plate with multipin connection module

Tightening torque for fittings

Thread	Max torque (Nm)
M5	3
M7	3
G1/8	3
G1/4	10

Electrical connection with external connector

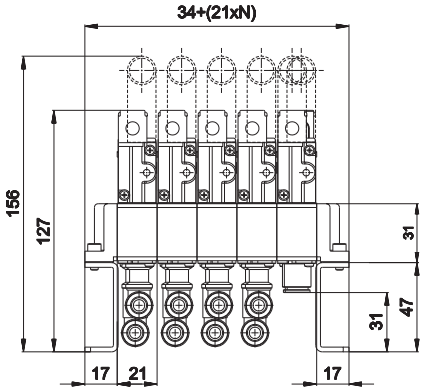

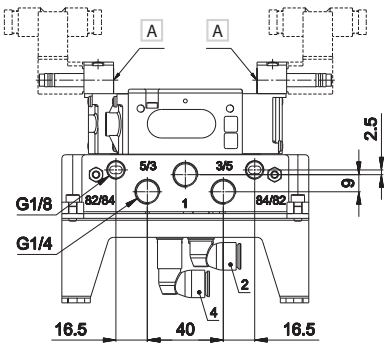

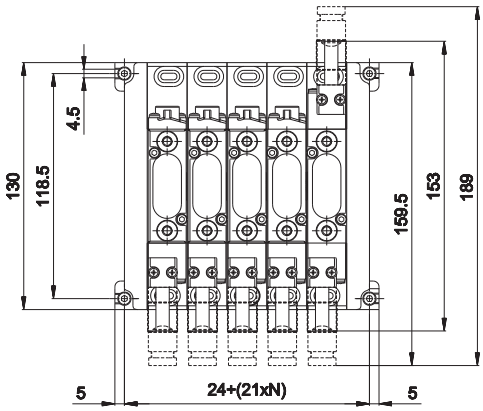

A Manual override

1 = Supply port
2 - 4 = Use
5/3 - 3/5 = Exhaust G1/4
82/84 - 84/82 = Electropilot exhaust G1/8

N = Number of valve position

3

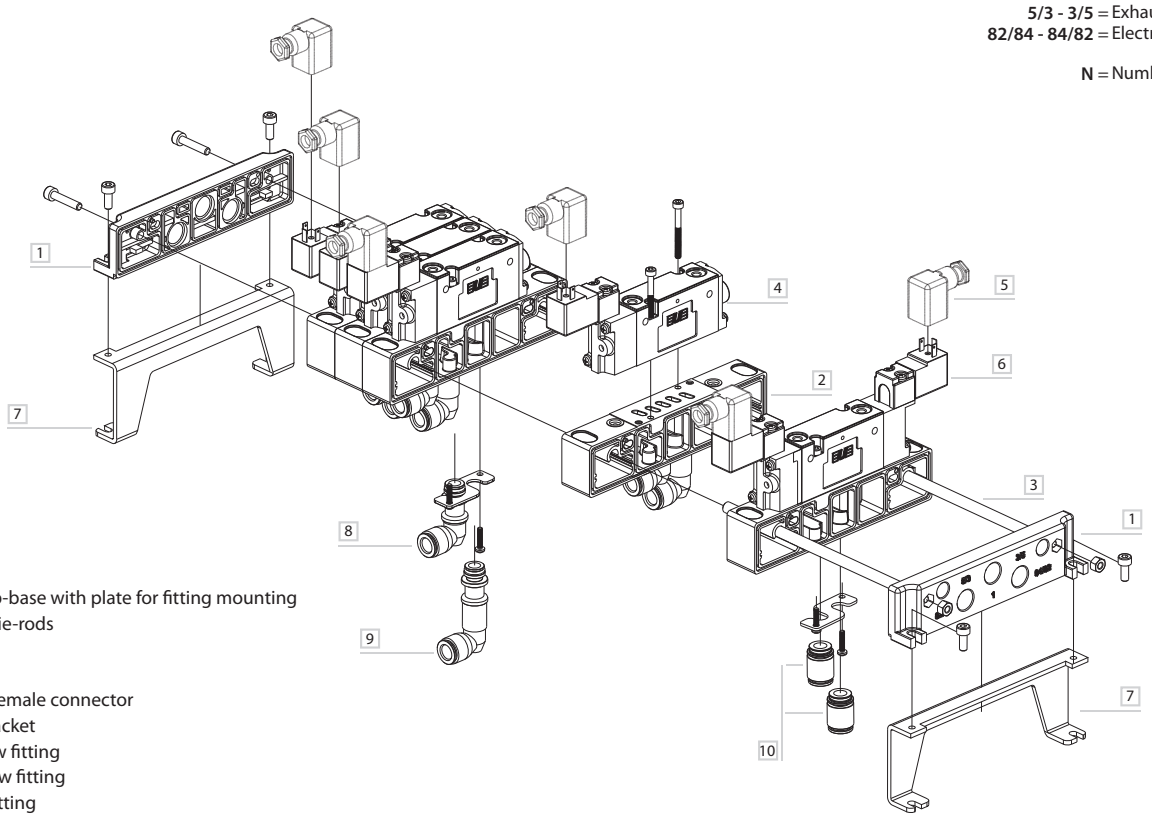

1 End plate
2 Single sub-base with plate for fitting mounting
3 Modular tie-rods
4 Valve
5 Coil
6 Multipin female connector
7 Lifting bracket
8 Low elbow fitting
9 High elbow fitting
10 Straight fitting

Tightening torque for fittings

Thread	Max torque (Nm)
M5	3
M7	3
G1/8	3
G1/4	10

Subject to change

Electrical connection with loose cables

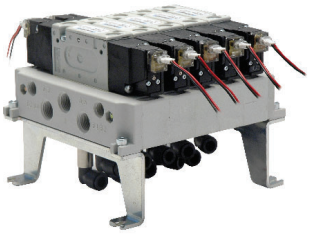

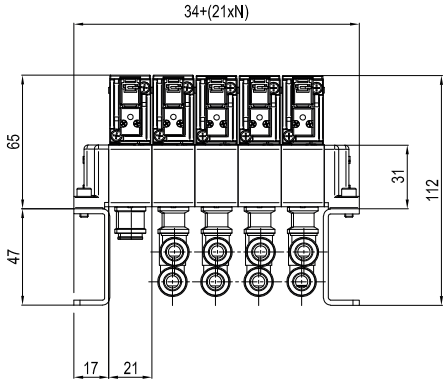

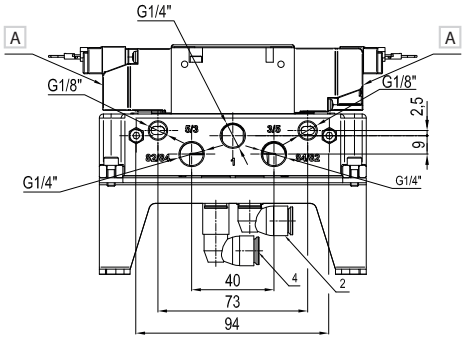

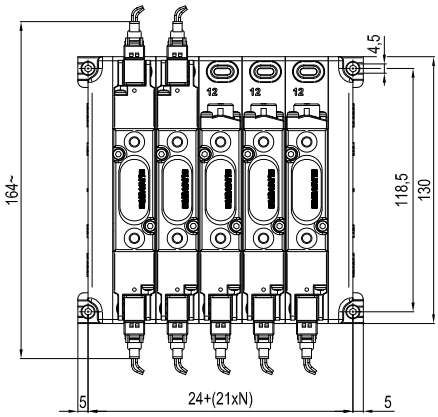

A Manual override

1 = Supply port
2 - 4 = Use
5/3 - 3/5 = Exhaust G1/4
82/84 - 84/82 = Electropilots exhaust G1/8

N = Number of valve positions

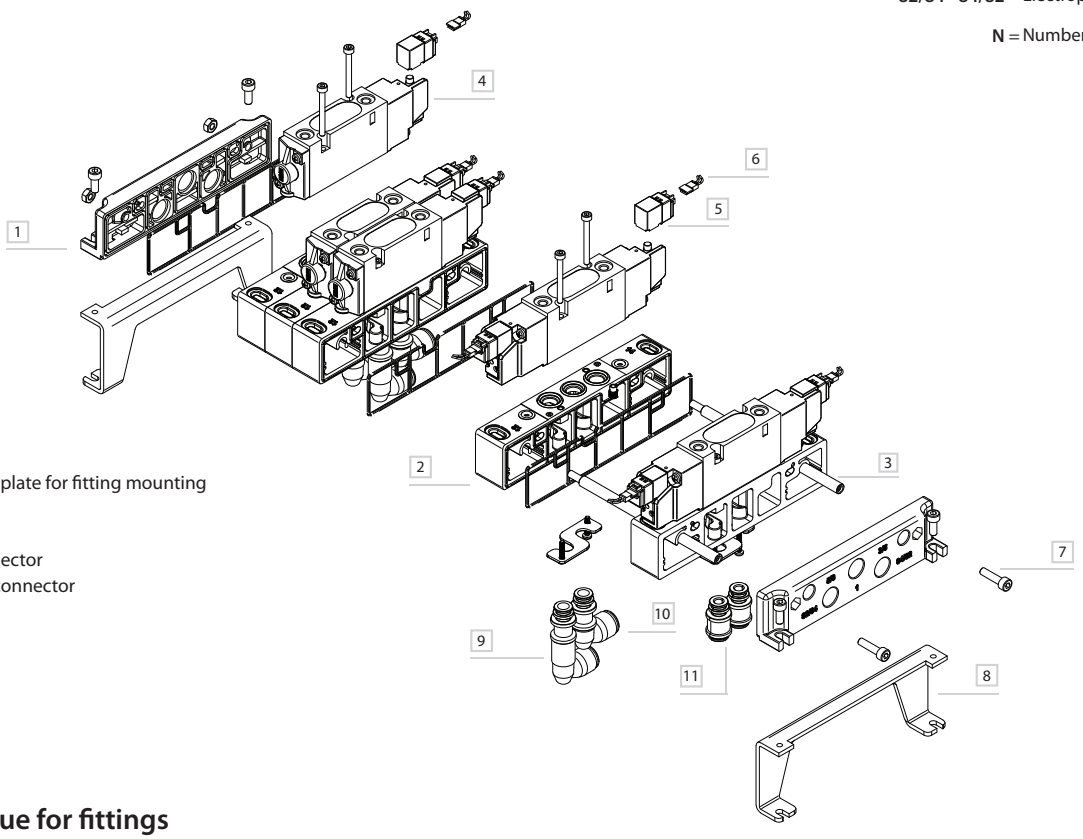

1 End plate
2 Single sub-base with plate for fitting mounting
3 Modular tie-rods
4 Valve
5 Multipin female connector
6 Coil with integrated connector
7 Bus connection card
8 Lifting bracket
9 Low elbow fitting
10 High elbow fitting
11 Straight fittings

Tightening torque for fittings

Thread	Max torque (Nm)
M5	3
M7	3
G1/8	3
G1/4	10

GP-6100

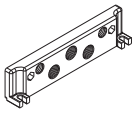

threaded end plate
weight: 0,046 Kg

GP-6110

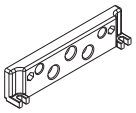

blank end plate
weight: 0,050 Kg

GP-611212

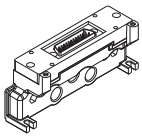

end plate with male connector
25 poles 12+12 coils
control 12-14
weight: 0,100 Kg

GP-611806

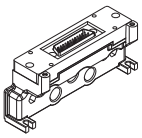

end plate with male connector
25 poles
18 coils control 14
6 coils control 12
(only for control 14
more than 12 coils max 18)
weight: 0,102 Kg

GP-6210/1/2

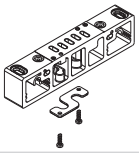

sub-base with
open diaphragms
GP-6210 without
electrical connection
GP-6211 monostable
GP-6212 bistable
weight: 0,060 Kg

GP-6220/1/2

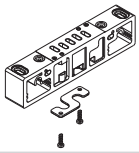

sub-base with
closed diaphragms
GP-6220 without
electrical connection
GP-6221 monostable
GP-6222 bistable
weight: 0,062 Kg

GP-6230/1/2

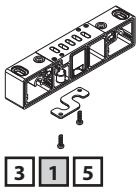

sub-base with
closed supply and
open exhausts
GP-6230 without
electrical connection
GP-6231 mostable
GP-6232 bistable
weight: 0,062 Kg

GP-6240/1/2

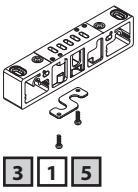

sud-base with
open supply and
closed exhausts
GP-6240 without
electrical connection
GP-6241 mostable
GP-6242 bistable
weight: 0,062 Kg

GP-6380

intermediate supply plate
(to be used only with
GP-63... series sub-base)
weight: 0,036 Kg

GP-6285

closing plate for
unused station
weight: 0,018 Kg

GP-6411

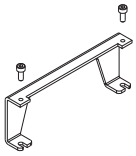

lifting bracket
weight: 0,086 Kg

GP-6400-1

modular tie-rod
1 valve place
weight: 0,004 Kg
(package 100 pcs.)

GP-6400-2

modular tie-rod
2 valve places
weight: 0,010 Kg
(package 100 pcs.)

GP-6400-5

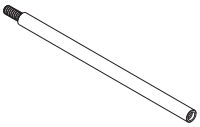

modular tie-rod
5 valve places
weight: 0,022 Kg
(package 100 pcs.)

AZ4-VN0416 screw M04x16 for tie-rods (package100 pcs.)
AZ4-SN004A hexagonal nut M4 (package100 pcs.)

GP-6512-01/..MF

BUS connection card
control side 12 with 12 pin
GP-6512-01MF 1 place
GP-6512-02MF 2 places
GP-6512-03MF 3 places
GP-6512-05MF 5 places
GP-6512-06MF 6 places
weight: 0,003 Kg
(for each place)

GP-6514-01/..MF

BUS connection card
control side 14 with 12 pin
GP-6514-01MF 1 place
GP-6514-02MF 2 places
GP-6514-03MF 3 places
GP-6514-05MF 5 places
GP-6514-06MF 6 places
weight: 0,003 Kg
(for each place)

GP-651418

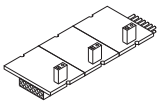

BUS connection card
control side 14 with 18 pin
(only12 places)
for manifold assemblies with
control 14 with more than 12
coils up to 18 coils use card
GP-651418 12 places
and then **GP-6514-...**
weight: 0,003 Kg
(for each place)

upon request customized solutions up to 12 places

GZR-100

blanking plug
weight: 0,010 Kg

GZR-V10004/6/8

straight fitting
(package 50 pcs.)
GZR-V10004 tube: 4 mm
GZR-V10006 tube: 6 mm
GZR-V10008 tube: 8 mm
weight: 0,010 Kg

GZR-V20004/6/8

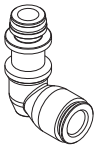

low elbow fitting
(package 50 pcs.)
GZR-V20004 tube: 4 mm
weight: 0,013 Kg
GZR-V20006 tube: 6 mm
weight: 0,014 Kg
GZR-V20008 tube 8 mm
weight: 0,015 Kg

GZR-V20L004/6/8

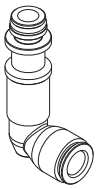

high elbow fitting
(package 50 pcs.)
GZR-V20L004 tube: 4 mm
weight: 0,017 Kg
GZR-V20L006 tube: 6 mm
weight: 0,021 Kg
GZR-V20L008 tube: 8 mm
weight: 0,027 Kg

DD-..

24 V CC 2 W coil
for single connection
weight: 0,019 Kg

DD-051-2C/DD-040-2C

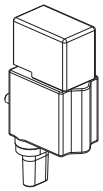

24 V CC 2 W coil
with integrated connector
for multipolar version
weight: 0,028 Kg

DE-652I

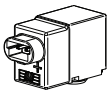

24 V DC 1,35 W coil
with in-line connector
with protection for a
complete tightness
weight: 0,013

D-530-30/50/200

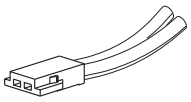

Miniature connector with loose
cables
D-530-30 = wire length 300 mm
D-530-50 = wire length 500 mm
D-530-200 = wire length 2000 mm

For sub-bases suitable for servoassistance add "**S**" to the part number (ex. GP-6210S)

Electrical connections

AM-5109

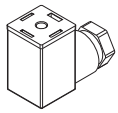

- 15 mm connector

TSCF24S0300
TSCF24S0500
TSCF24S1000

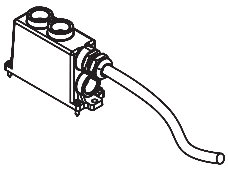

- flying fermale connector sub D according to CEI 20-22 O.R. II (upon request)
  prewired for 24 coils
  M3 x 12 fixing screws

Colour identification according to standard **DIN 47100**

Female connector **D-SUB 25 poles**
for **12+12 coils**

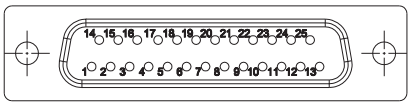

PIN No.	Colour	Coil	Control side GP-611212	Control side GP-611806	Valve No.
1	white	1	14	14	1
2	brown	2	12	12	1
3	green	3	14	14	2
4	yellow	4	12	12	2
5	grey	5	14	14	3
6	pink	6	12	12	3
7	blue	7	14	14	4
8	red	8	12	12	4
9	black	9	14	14	5
10	violet	10	12	12	5
11	grey-pink	11	14	14	6
12	red-blue	12	12	12	6
13	white-green	13	14	14	7
14	brown-green	14	12	14	7
15	white-yellow	15	14	14	8
16	yellow-brown	16	12	14	8
17	white-grey	17	14	14	9
18	grey-brown	18	12	14	9
19	white-pink	19	14	14	10
20	pink-brown	20	12	14	10
21	white-blue	21	14	14	11
22	brown-blue	22	12	14	11
23	white-red	23	14	14	12
24	brown-red	common	-	-	-
25	white-black	24	12	14	12

G7

26 mm G1/8 valves and solenoid valves

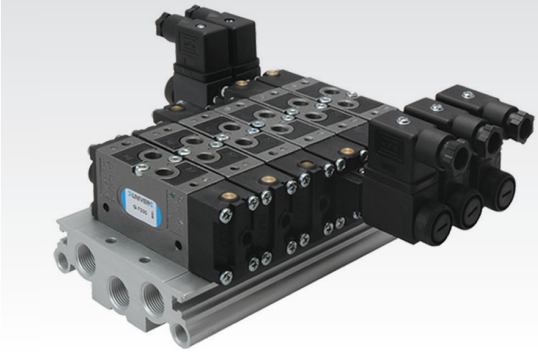

Available ATEX version upon request

CE Ex II 2Gc IIC T5 II 2Dc T100°C

TECHNICAL CHARACTERISTICS

Ambient temperature	-10 ÷ +45 °C
Fluid temperature	max +50 °C
Fluid	50 µm filtered air, with or without lubrication
Commutation system	spool
Ways/Positions	**5/2, 5/3**
Pressure	10 bar max
Control	indirect electro - pneumatic, pneumatic
Return	mechanical spring, pneumomechanical spring
Connections	G1/8
Nominal Ø	6 mm
Nominal flow rate	860 Nl/min

CONSTRUCTIVE CHARACTERISTICS

Valve body	zamak
Seals	nitrile rubber
Actuators	technopolymer
Spool	aluminium

ELECTRIC CHARACTERISTICS

Electropilot	AA series
Coil	U1-U3
Power consumption	3,5 W (DC) - 5 VA (AC)
Connector	AM-5110
Voltage	12 V DC - 24 V DC - 24 V AC - 110 V AC - 230 V AC
Manual override	impulse screw – 2 positions

Flow rate characteristics

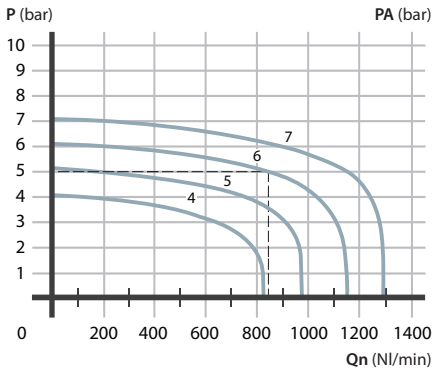

P = Working pressure
PA = Supply pressure
Qn = Flow rate

CODIFICATION KEY

G	-	7	3	9	0		
1			2	3	4	5	6

1 Series
G-7 = G1/8 26 mm Valves

2 Type
2 = 5/2
3 = 5/3 c.c.
4 = 5/3 o.c.
5 = 5/3 p.c.

3 Control 14
3 = Pneumatic on the body
9 = In line electric U1 pilot

4 Return 12
0 = Pneumomechanical spring
1 = Mechanical spring
3 = Pneumatic on the body
9 = In line electric U1 pilot

5 Option
D = Pilot external servo-assistance on valve body (M5)
G = Manual override on the valve body (only bistable versions)

6 ATEX version
X = Atex (upon request)

See ATEX Catalogue for types and versions

o.c. = open centres **c.c.** = closed centres **p.c.** = pressurized centres

Single/double pneumatic impulse

	Symbol	Control	Return	Pressure	Resp. Time (ms)		Weight	Part no.
		14	12	bar	En.	De-en.	Kg	
	SINGLE PNEUMATIC IMPULSE							
5/2	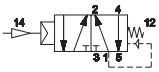	pneumatic amplified	pneumomechanical spring	1,5÷10	8	14	0,190	**G-7230**
5/2	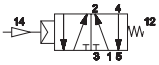	pneumatic amplified	mechanical spring	1,5÷9	18	64	0,190	**G-7231**
	DOUBLE PNEUMATIC IMPULSE							
5/2	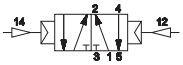	pneumatic amplified	pneumatic amplified	0,7÷10	4	4	0,190	**G-7233**
5/3 c.c.	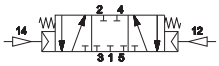	pneumatic amplified	pneumatic amplified	2÷10	8	8	0,200	**G-7333**
5/3 o.c.	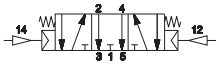	pneumatic amplified	pneumatic amplified	2÷10	8	8	0,200	**G-7433**
5/3 p.c.	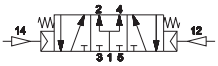	pneumatic amplified	pneumatic amplified	2÷10	8	8	0,200	**G-7533**

o.c. = open centres **c.c.** = closed centres **p.c.** = pressurized centres

Single pneumatic impulse

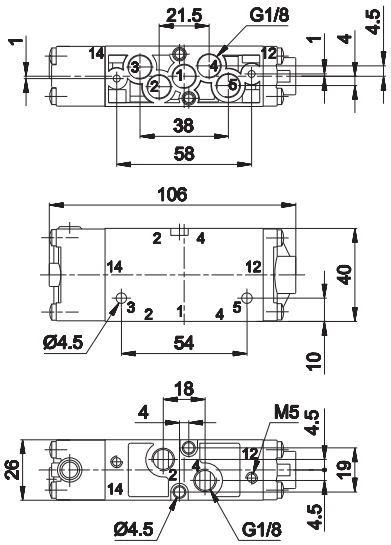

Double pneumatic impulse

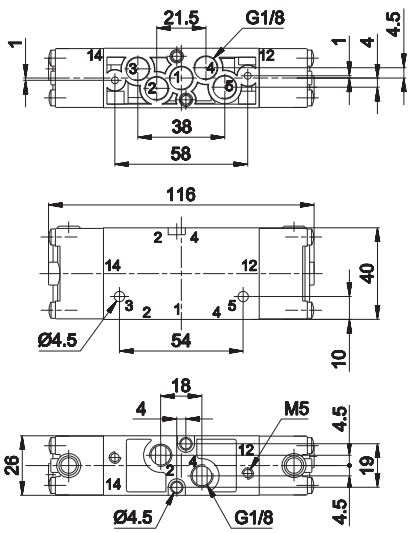

1 = Supply port
2 - 4 = Use
3 - 5 = Exhaust
14 = Control
12 = Return

The valve is supplied with two plugs to be mounted with loctite onto the unused 2-4 connections
Electropilots are supplied without coil, connector and locking ring

Single/double electric impulse

	Symbol	Control	Return	Pressure	Resp. Time (ms)		Weight	Part no.
		14	12	bar	En.	De-en.	Kg	
	SINGLE ELECTRIC IMPULSE							
5/2	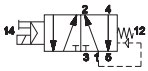	electric amplified	pneumomechanical spring	1,5÷10	15	23	0,214	**G-7290**
5/2	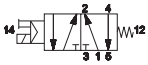	electric amplified	mechanical spring	1,5÷9	13	34	0,214	**G-7291**
	DOUBLE ELECTRIC IMPULSE							
5/2	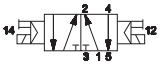	electric amplified	electric amplified	0,7÷10	12	12	0,280	**G-7299**
5/3 c.c.	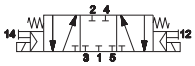	electric amplified	electric amplified	2÷10	14	18	0,309	**G-7399**
5/3 o.c.	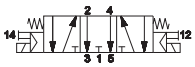	electric amplified	electric amplified	2÷10	14	18	0,309	**G-7499**
5/3 p.c.	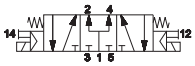	electric amplified	electric amplified	2÷10	14	18	0,309	**G-7599**

o.c. = open centres **c.c.** = closed centres **p.c.** = pressurized centres

Single electric impulse

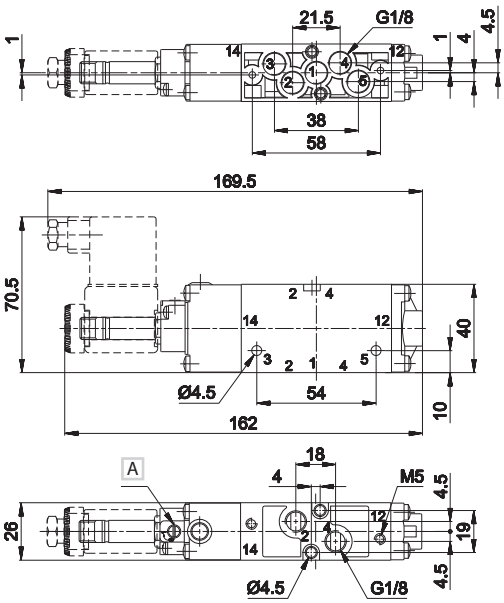

Double electric impulse

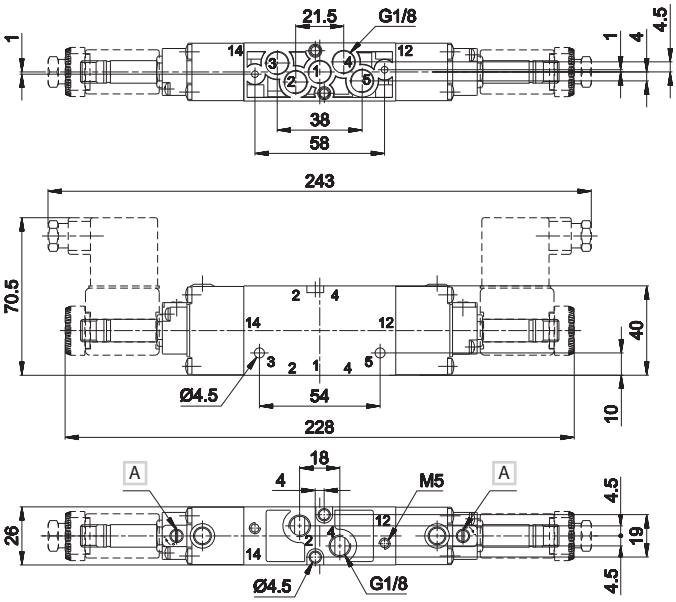

A Manual override

1 = Supply port
2 - 4 = Use
3 - 5 = Exhaust
14 = Control
12 = Return

The valve is supplied with two plugs to be mounted with loctite onto the unused 2-4 connections
Electropilots are supplied without coil, connector and locking ring

Multiple sub-base **G1/8**

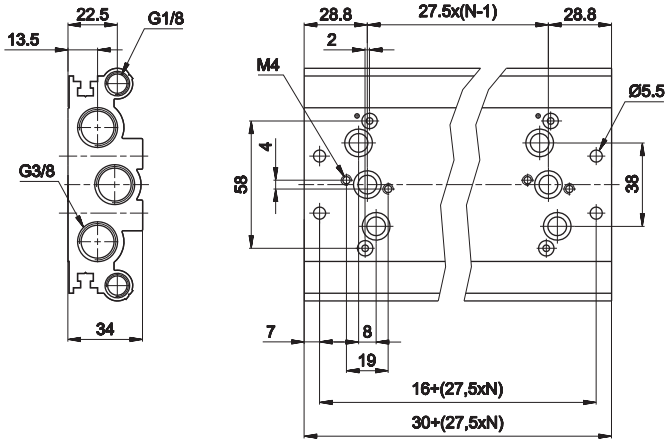

	material	aluminium
Places N.	**Weight Kg**	**Part no.**
2	0,455	G-7900-02
3	0,594	G-7900-03
4	0,733	G-7900-04
5	0,872	G-7900-05
6	1,011	G-7900-06
7	1,150	G-7900-07
8	1,289	G-7900-08
9	1,428	G-7900-09
10	1,567	G-7900-10
11	1,706	G-7900-11
12	1,845	G-7900-12

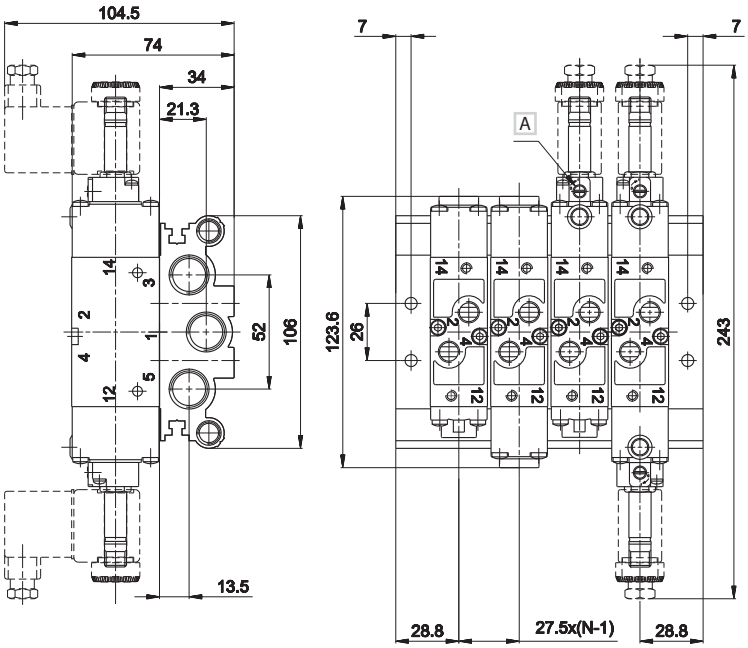

A Manual override

1 = Supply port
2 - 4 = Use
3 - 5 = Exhaust
14 = Control
12 = Return

G-7885

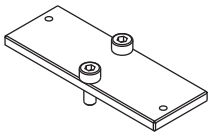

covering-plate for sub-base place
weight: 0,019 Kg

AM-5151

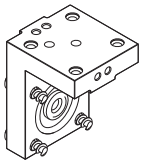

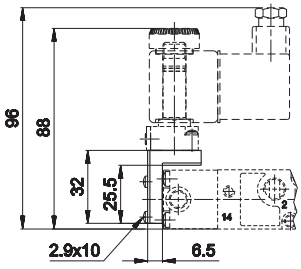

"H" option solenoid square
weight: 0,035 Kg

AM-5152

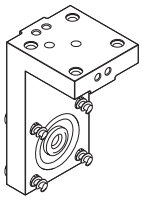

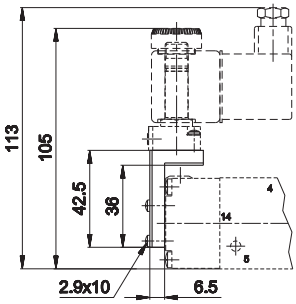

"P" option solenoid square
weight: 0,05 Kg

Subject to change

PS

COMBOBOX valves

- Valves with compact design: valve body with integrated sub-base
- High flexibility:
  > possibility of choosing fitting dimension (4-6-8) according to users' needs
  > manifolds from 2 up to 20 valve positions
  > electric and pneumatic control - versions 3/2+3/2 - 5/2 - 5/3
  > different pressures (vacuum included)
- Electrical connection: external - multipin - serial connections

Available ATEX version upon request

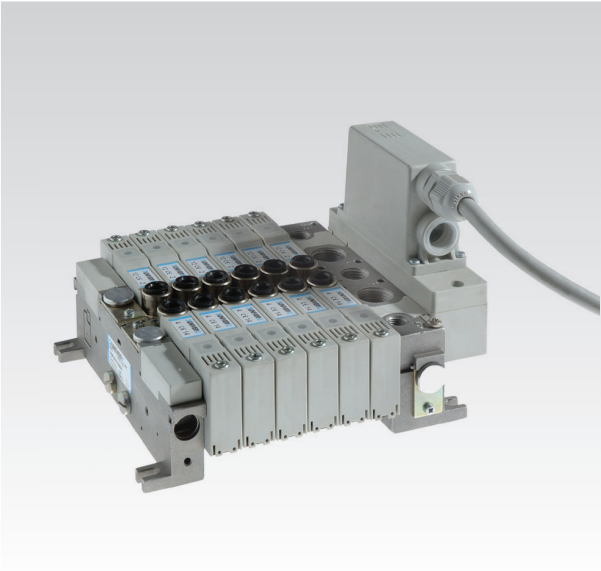

TECHNICAL CHARACTERISTICS

Ambient temperature	-5 ÷ +50 °C (**PSR**: -15 ÷ +50 °C)
Fluid temperature	Max +50 °C
Fluid	10 µm filtered air, with or without lubrication
Commutation system	spool
Ways/Positions	**3/2+3/2, 5/2, 5/3**
Pressure	**electric control** = Max 9 bar **pneumatic control** = Max 10 bar
Control	indirect electro-pneumatic, pneumatic
Return	mechanical spring, pneumomechanical spring
Connections	tube Ø 4, 6, 8
Nominal Ø	6 mm
Nominal flow rate (Nl/min) according to the type of fittings:	
straight - tube Ø8 mm	**830**
90° elbow - tube Ø8 mm	**700**
straight - tube Ø6 mm	**510**
90° elbow - tube Ø6 mm	**370**
straight - tube Ø4 mm	**200**
90° elbow - tube Ø4 mm	**140**

CONSTRUCTIVE CHARACTERISTICS

Valve body	zamak
Seals	nitrile rubber
Actuators	self-extinguishing technopolymer
Spool	aluminum

ELECTRIC CHARACTERISTICS

Electropilot/Coil	B series/U04
Voltage	24 V DC (12 V DC upon request)
Power consumption	1,35 W
Protection degree	IP65
Manual override	recessed button - 1 position **(PSC)**
	impulse screw - 1-2 positions **(PSP)**

Flow rate characteristics

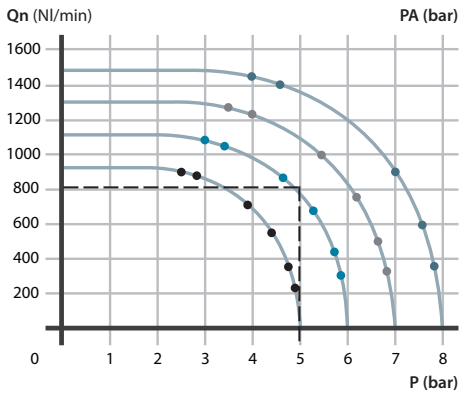

P = Working pressure
PA = Supply pressure
Qn = Flow rate

CODIFICATION KEY

P	S	C	2	6	0	2	4	
1			2	3	4	5		6

1 Series
COMBOBOX Valves
PSC = Separate wires
PSP = Plug-in
PSR = Pneumatic

2 Ways
2 = 5/2
3 = 5/3 c.c.
4 = 5/3 o.c.
5 = 5/3 p.c.
6 = 3/2+3/2 NC-NC
7 = 3/2+3/2 NC-NO
8 = 3/2+3/2 NO-NO

3 Control 14
2 = Pneumatic amplified
6 = Electrical amplified

4 Return 12
0 = Pneumatic spring
1 = Mechanical spring
2 = Pneumatic amplified
3 = Pneumatic not amplified
6 = Electrical amplified
7 = Electrical not amplified

5 Voltage and coil
PSC and PSP series: coils assembled with standard supplied led
24 = 24 V (standard)
12 = 12 V (upon request)

6 ATEX version
X = Atex (upon request)

See ATEX Catalogue for types and versions

o.c. = open centres **c.c.** = closed centres **p.c.** = pressurized centres

Subject to change

Single electric impulse

	Symbol	Control 14	Return 12	Pressure bar	Resp. Time (ms) En.	Resp. Time (ms) De-en.	Weight Kg	Part no.
5/2	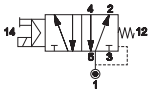	electrical amplified	pneumomechanical spring	1,8÷9	17	38	0,143	**PSC26024**
5/2		electrical amplified	mechanical spring	2,2÷9	15	50	0,143	**PSC26124**

Double electric impulse

	Symbol	Control 14	Return 12	Pressure bar	Resp. Time (ms) En.	Resp. Time (ms) De-en.	Weight Kg	Part no.
5/2	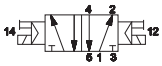	electrical amplified	electrical amplified	0,7÷9	11	11	0,150	**PSC26624**
5/3 c.c.	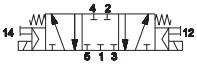	electrical amplified	electrical amplified	2,2÷9	15	50	0,155	**PSC36624**
5/3 o.c.	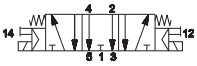	electrical amplified	electrical amplified	2,2÷9	15	50	0,155	**PSC46624**
5/3 p.c.	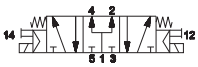	electrical amplified	electrical amplified	2,2÷9	15	50	0,155	**PSC56624**
3/2 NC + 3/2 NC	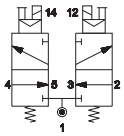	electrical amplified	electrical amplified	2÷9	15	33	0,140	**PSC66624**
3/2 NC + 3/2 NO	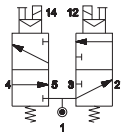	electrical amplified	electrical amplified	2÷9	15	33	0,140	**PSC76624**
3/2 NO + 3/2 NO	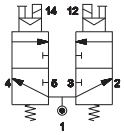	electrical amplified	electrical amplified	2÷9	15	33	0,140	**PSC86624**

o.c. = open centres **c.c.** = closed centres **p.c.** = pressurized centres

Solenoid valves are supplied without coil and connector
Manual override on PSC series is with button with tool, 1 position

Single electric impulse

	Symbol	Control	Return	Pressure	Resp. Time (ms)		Weight	Part no.
		14	12	bar	En.	De-en.	Kg	
5/2	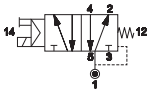	electrical amplified	pneumomechanical spring	1,8÷9	17	38	0,148	**PSP26024**
5/2		electrical amplified	mechanical spring	2,2÷9	15	50	0,148	**PSP26124**

Double electric impulse

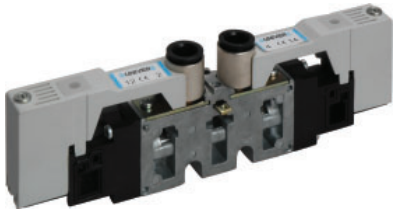

	Symbol	Control	Return	Pressure	Resp. Time (ms)		Weight	Part no.
		14	12	bar	En.	De-en.	Kg	
5/2	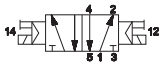	electrical amplified	electrical amplified	0,7÷9	11	11	0,160	**PSP26624**
5/3 c.c.	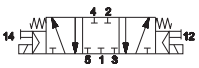	electrical amplified	electrical amplified	2,2÷9	15	50	0,165	**PSP36624**
5/3 o.c.	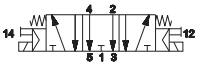	electrical amplified	electrical amplified	2,2÷9	15	50	0,165	**PSP46624**
5/3 p.c.	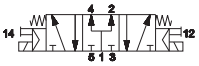	electrical amplified	electrical amplified	2,2÷9	15	50	0,165	**PSP56624**
3/2 NC + 3/2 NC	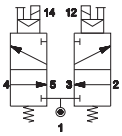	electrical amplified	electrical amplified	2÷9	15	33	0,140	**PSP66624**
3/2 NC + 3/2 NO	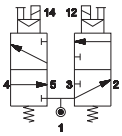	electrical amplified	electrical amplified	2÷9	15	33	0,140	**PSP76624**
3/2 NO + 3/2 NO	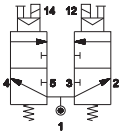	electrical amplified	electrical amplified	2÷9	15	33	0,140	**PSP86624**

o.c. = open centres **c.c.** = closed centres **p.c.** = pressurized centres

Solenoid valves are supplied without coil and connector
Manual override on PSC series is with button with tool, 1 position
On PSP series a maximum of 20 coils can be used, restriction due to the connection modules

Single pneumatic impulse

	Symbol	Control	Return	Pressure	Resp. Time (ms)		Weight	Part no.
		14	12	bar	En.	De-en.	Kg	
5/2	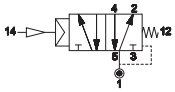	pneumatic amplified	pneumomechanical spring	1,7÷10	14	33	0,136	**PSR220**
5/2	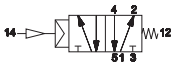	pneumatic amplified	mechanical spring	2,2÷10	12	45	0,136	**PSR221**

Double pneumatic impulse

	Symbol	Control	Return	Pressure	Resp. Time (ms)		Weight	Part no.
		14	12	bar	En.	De-en.	Kg	
5/2	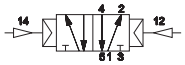	pneumatic amplified	pneumatic amplified	0,7÷10	5	5	0,136	**PSR222**
5/2	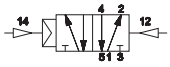	pneumatic amplified	pneumatic non amplified	1,1÷10	9	8	0,132	**PSR223**
5/3 c.c.	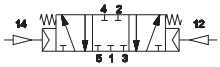	pneumatic amplified	pneumatic amplified	2,2÷10	12	45	0,140	**PSR322**
5/3 o.c.	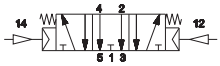	pneumatic amplified	pneumatic amplified	2,2÷10	12	45	0,140	**PSR422**
5/3 p.c.	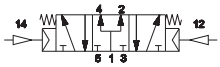	pneumatic amplified	pneumatic amplified	2,2÷10	12	45	0,140	**PSR522**
3/2 NC + 3/2 NC	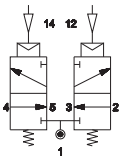	pneumatic amplified	pneumatic amplified	2÷10	12	29	0,140	**PSR622**
3/2 NC + 3/2 NO	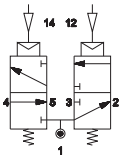	pneumatic amplified	pneumatic amplified	2÷10	12	29	0,140	**PSR722**
3/2 NO + 3/2 NO	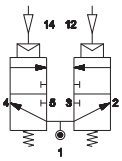	pneumatic amplified	pneumatic amplified	2÷10	12	29	0,140	**PSR822**

o.c. = open centres **c.c.** = closed centres **p.c.** = pressurized centres

PSC Series with 26 mm inlet plate and 14.5 mm end plate with DIN (EN50022) rail

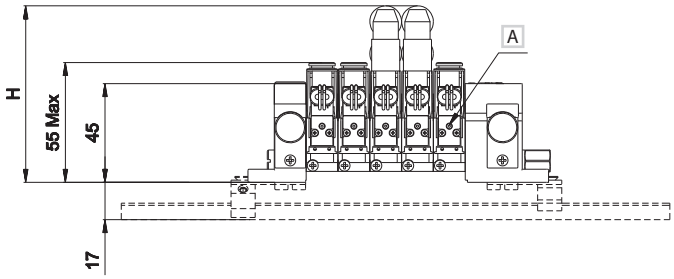

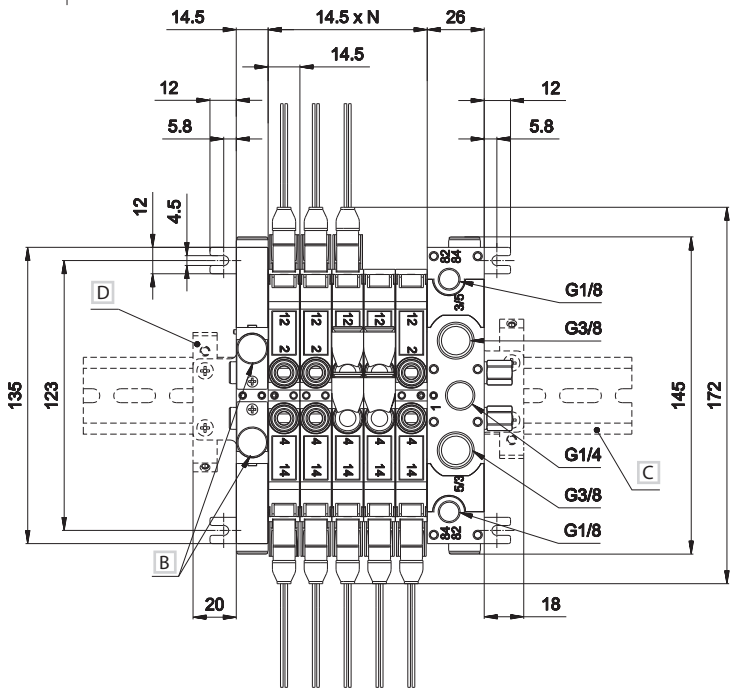

Tube Ø	H
4	72,6
6	76,6
8	80,5

A Manual override
B Possibility of supplementary exhausts 3-5
C DIN rail (EN 50022)
D DIN rail connector as optional

1 = Supply port
2 - 4 = Use
3 - 5 = Exhaust
14 = Control
12 = Return
82 = Pilot exhaust side 2
84 = Pilot exhaust side 4

N = Number of valve positions

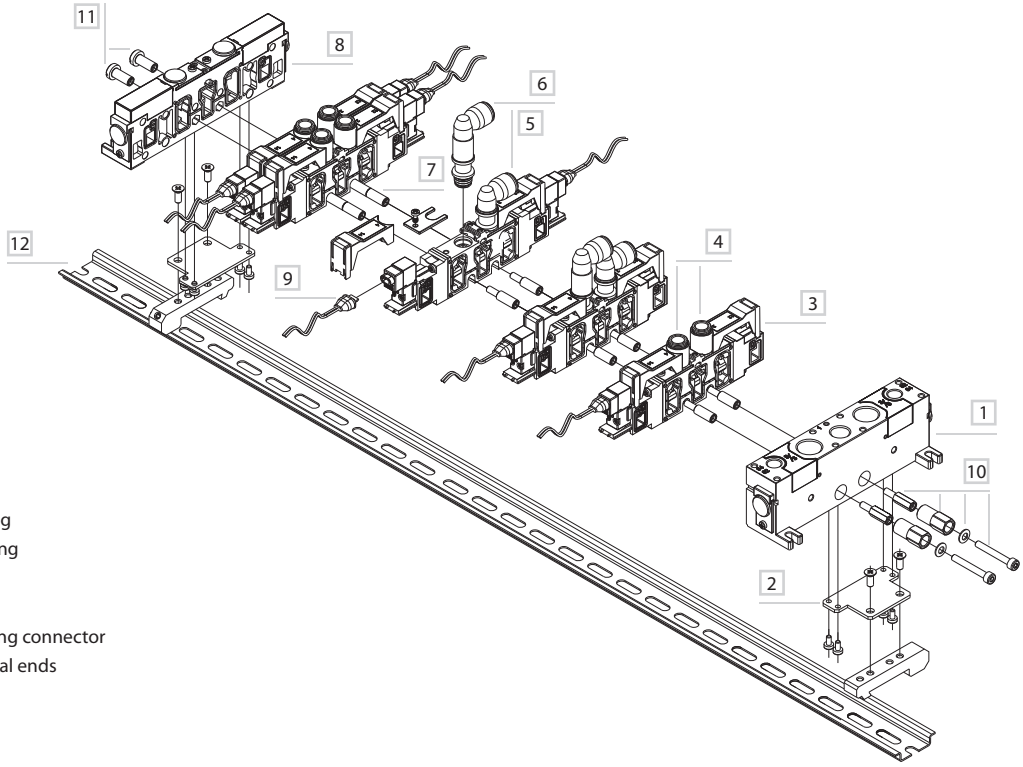

1 Inlet plate
2 DIN rail adapter plate
3 Valve
4 Straight fitting
5 Swivel low elbow fitting
6 Swivel high elbow fitting
7 Modular tie-rods
8 Blank plate
9 Micro double-pole flying connector
10 Tie-rods with hexagonal ends
11 Counter tie-rods
12 DIN rail

PSC series with 14,5 mm inlet and end plate

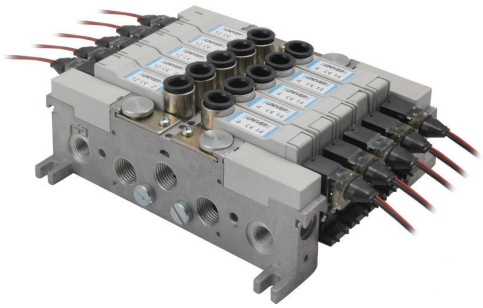

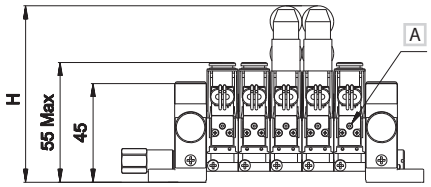

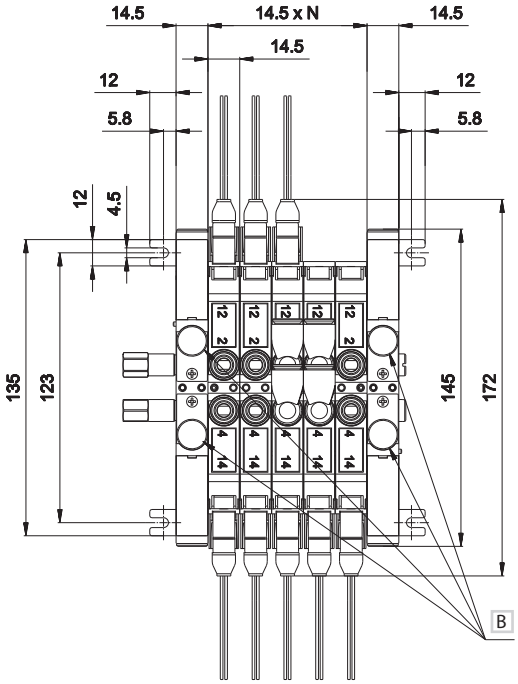

Tube Ø	H
4	72,6
6	76,6
8	80,5

A Manual override
B Possibility of supplementary exhausts 3 - 5

1 = Supply port
2 - 4 = Use
3 - 5 = Exhaust
14 = Control
12 = Return
82 = Pilot exhaust side 2
84 = Pilot exhaust side 4

N = Number of valve positions

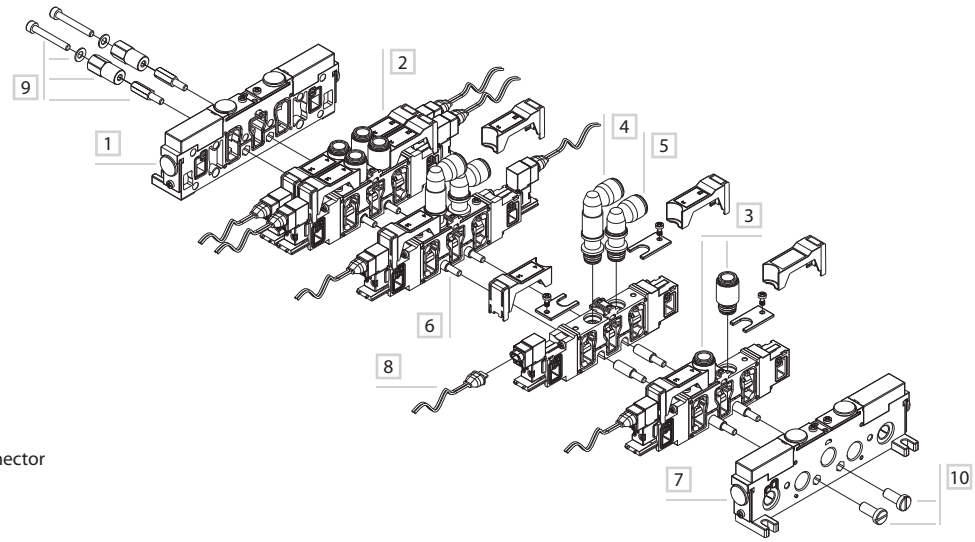

1 Inlet plate
2 Valve
3 Straight fitting
4 Swivel low elbow fitting
5 Swivel high elbow fitting
6 Modular tie-rods
7 Blank plate
8 Micro double-pole flying connector
9 Tie-rods with hexagonal ends
10 Counter tie-rods

PSP series with 26mm inlet plate and 14,5 mm end plate with multipolar connector

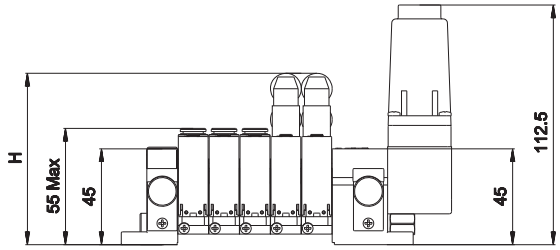

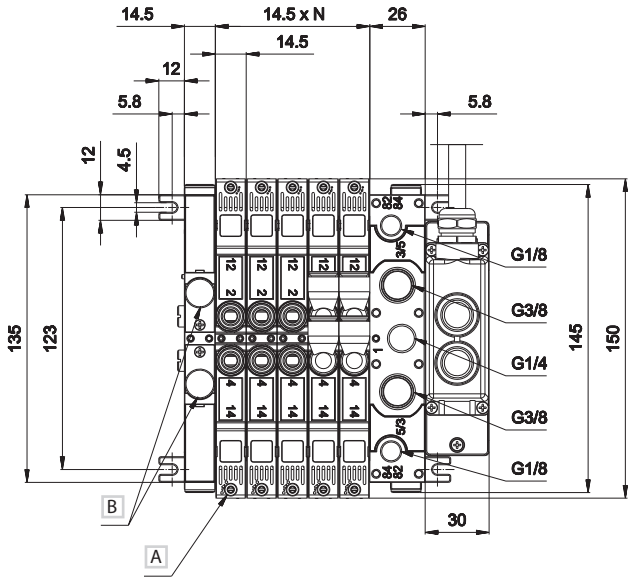

Tube Ø	H
4	72,6
6	76,6
8	80,5

A Manual override
B Possibility of supplementary exhausts 3 - 5

1 = Supply port
2 - 4 = Use
3 - 5 = Exhaust
14 = Control
12 = Return
82 = Pilot exhaust side 2
84 = Pilot ehhaust side 4

N = Number of valve positions

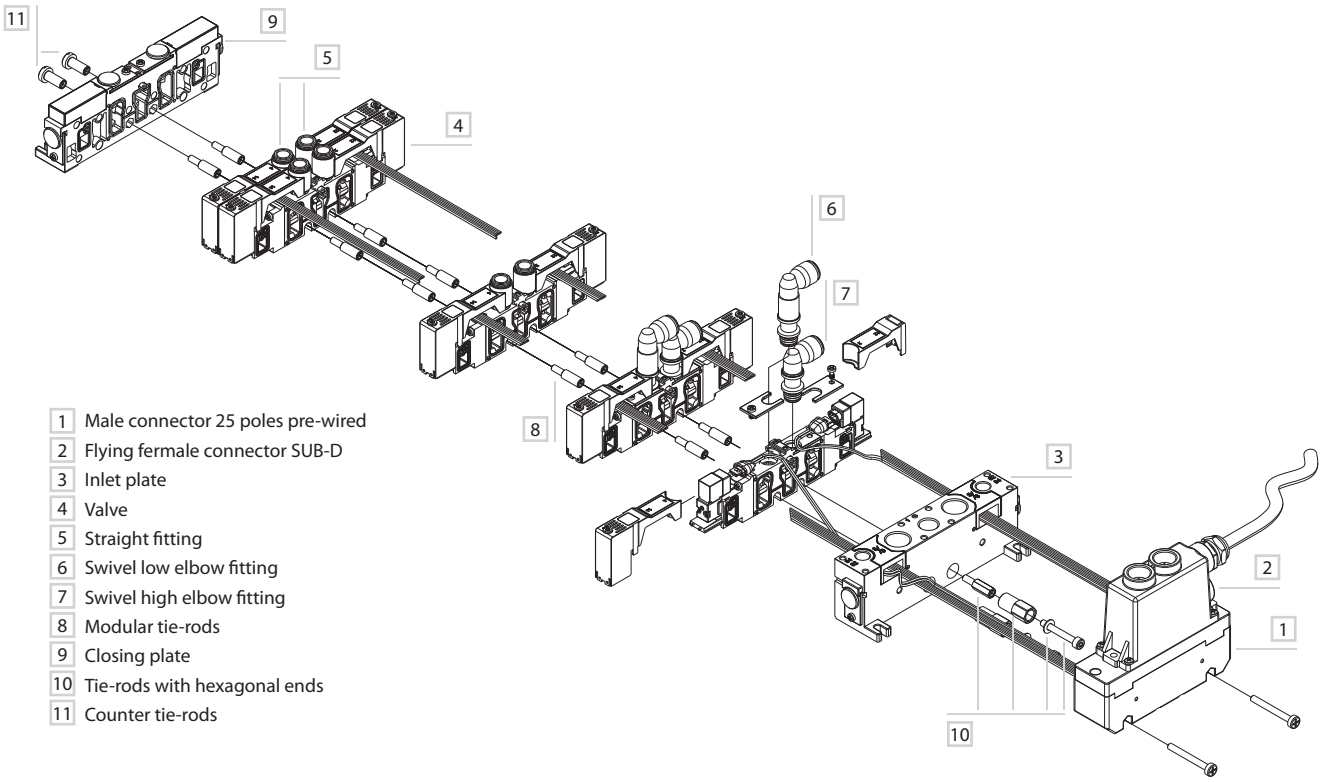

1 Male connector 25 poles pre-wired
2 Flying female connector SUB-D
3 Inlet plate
4 Valve
5 Straight fitting
6 Swivel low elbow fitting
7 Swivel high elbow fitting
8 Modular tie-rods
9 Closing plate
10 Tie-rods with hexagonal ends
11 Counter tie-rods

PSP series with 26mm inlet plate and 14.5mm end plate with multipin connector and intermediate plate

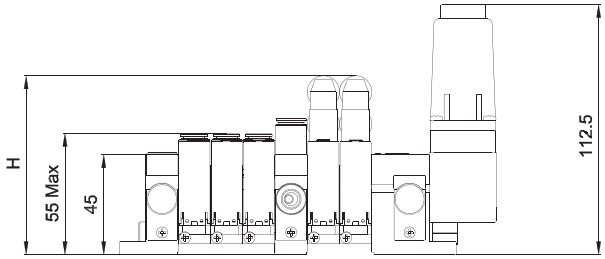

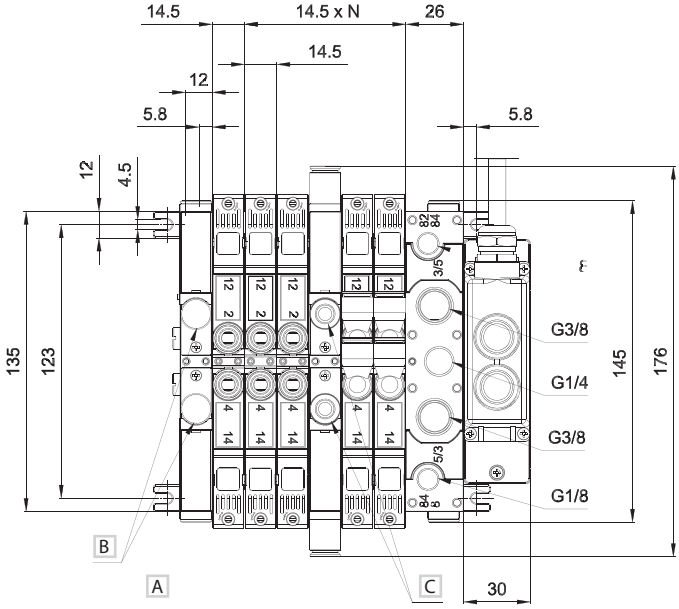

Tube Ø	H
4	72,6
6	76,6
8	80,5

A Manual override
B Possibility of supplementary exhausts 3 - 5
C For type of fittings see page **3**_59

1 = Supply port
2 - 4 = Use
3 - 5 = Exhaust
14 = Control
12 = Return
82 = Pilot exhaust side 2
84 = Pilot exhaust side 4

N = Number of valve positions

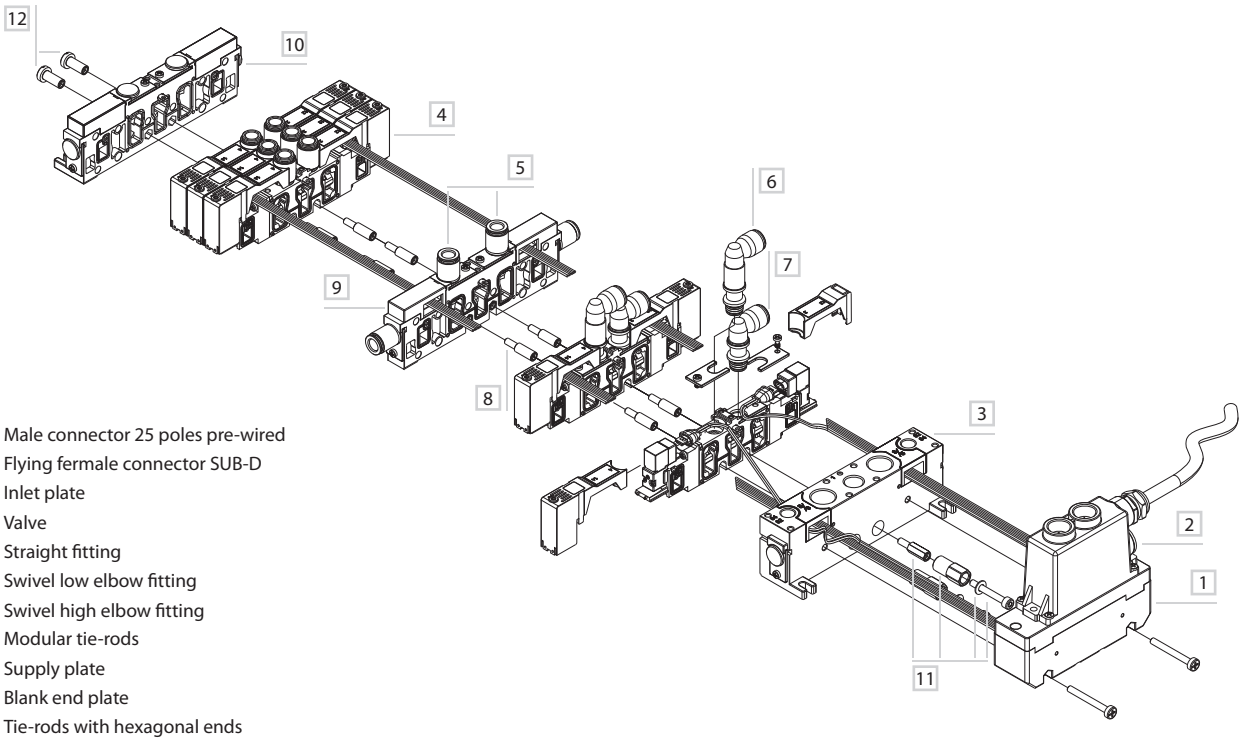

1 Male connector 25 poles pre-wired
2 Flying female connector SUB-D
3 Inlet plate
4 Valve
5 Straight fitting
6 Swivel low elbow fitting
7 Swivel high elbow fitting
8 Modular tie-rods
9 Supply plate
10 Blank end plate
11 Tie-rods with hexagonal ends
12 Counter tie-rods

PSR series with 26 mm inlet and 14,5 mm end plate

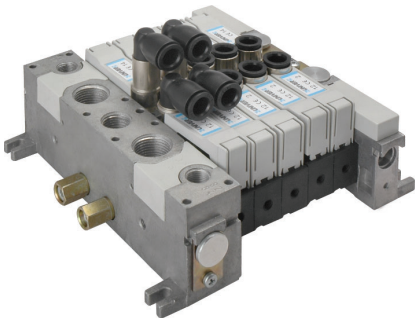

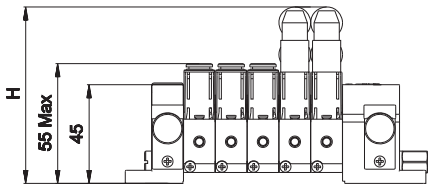

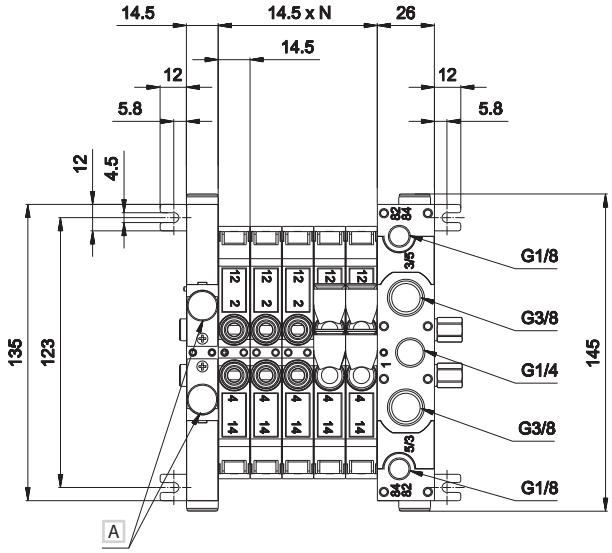

Tube Ø	H
4	72,6
6	76,6
8	80,5

A Possibility of supplementary exhausts 3 - 5

1 = Supply port
2 - 4 = Use
3 - 5 = Exhaust
14 = Control
12 = Return
82 = Pilot exhaust side 2
84 = Pilot exhaust side 4

N = Number of valve positions

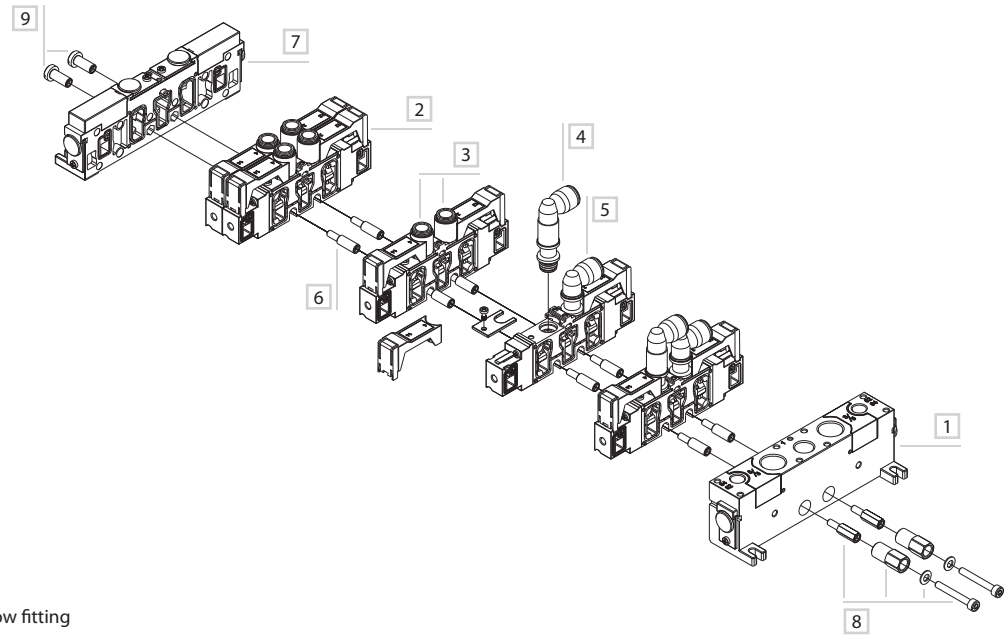

1 Inlet plate
2 Valve
3 Straight fitting
4 Swivel low elbow fitting
5 Swivel high elbow fitting
6 Modular tie-rods
7 Blank plate
8 Tie-rods with hexagonal ends
9 Counter tie-rods

PS14100

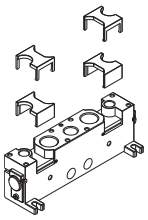

inlet plate 26 mm
internal pilot supply
weight: 0,295 Kg

PS14200

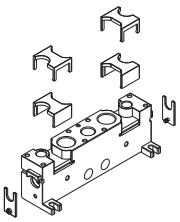

inlet plate 26 mm
external pilot pupply
weight: 0,290 Kg

PS15000

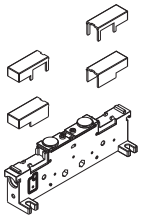

blank closing plate
weight: 0,168 Kg

PS15100

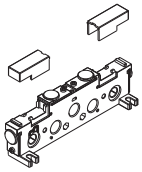

intel plate 14,5 mm
internal pilot supply
weight: 0,167 Kg

PS15200

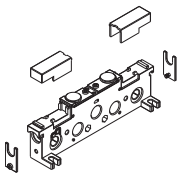

intel plate 14,5 mm
external pilot supply
weight: 0,162 Kg

PS15300*

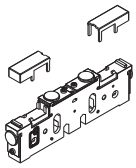

intermediate plate
14,5 mm, closed air
supply, open exhausts
weight: 0,167 Kg

PS15310*

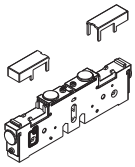

intermediate plate
14,5 mm, open air
supply, closed exhausts
weight: 0,170 Kg

PS15320*

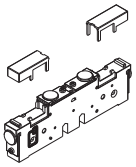

intermediate plate
14,5 mm, closed
air supply and exhaust
weight: 0,171 Kg

PS15330*

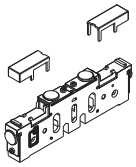

intermediate plate
14,5 mm open
air supply and exhaust
weight: 0,165 Kg

PS15340

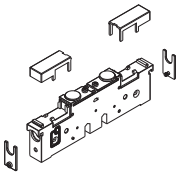

intermediate supply plate
with closed exhausts and
internal pilot supply
weight: 0,164 Kg

PS15350

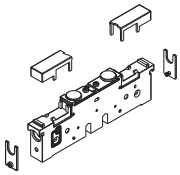

intermediate supply plate
with closed exhausts and
external pilot supply
weight: 0,164 Kg

PS15360

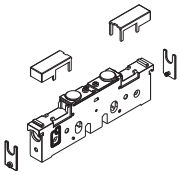

intermediate supply plate
with open exhausts and
internal pilot supply
weight: 0,164 Kg

PS15370

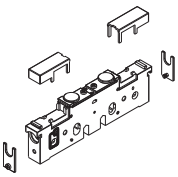

intermediate supply plate
with open exhausts and
external pilot supply
weight: 0,164 Kg

* = For intermediate plate with closed pilot supply ports add suffix 1 to part number.
The intermediate plate occupies one valve place, please keep this in mind for a correct order of the modular tie-rods.

Supply with airf the electropilots by means of the end plates for both internal and external air supply. In case there are two different working pressures at the end plates, it is possible to supply all pilots with one of the two pressures (in general with the higher one) or to supply the pilots of each valve group with the related working pressure.
This can be realized by choosing the correct separation plate.
The same is valid if the pressures are more than two: in this case it is necessary to use intermediate supply plates suitably coupled with the separation plates.

PSK100145

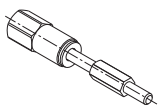

tie-rods with hexagonal
ends
(package 50 pcs.)
weight: 0,015 Kg

PSK200145

modular tie-rods
L1 = 14,5 mm each place
(package 100 pcs.)
weight: 0,003 Kg

PSK200290

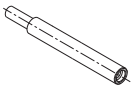

modular tie-rods
L2 = 29 mm for 2 places
(package 100 pcs.)
weight: 0,006 Kg

PSK200725

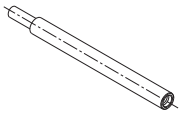

modular tie-rods
L5 = 72,5 mm for 5 places
(package 100 pcs.)
weight: 0,015 Kg

PSK300145

counter tie-rods
(package 50 pcs.)
weight: 0,003 Kg

PSK401

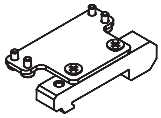

DIN rail adapter plate
with screws
(package 2 pcs. suitable
for all models)
weight: 0,066 Kg

GZR-100

plug
(package 2 pcs. suitable
for all models)
weight: 0,002 Kg

GZR-101

G1/8
Fitting seat reducing
plug - gas thread for
silencer assembly
weight: 0,011 Kg

GZR-102

G1/4
Fitting seat reducing
plug - gas thread for
silencer assembly
weight: 0,0315 Kg

GZR-V10004/6/8

straight fitting
(package 50 pcs.)
GZR-V10004 tube: 4 mm
GZR-V10006 tube: 6 mm
GZR-V10008 tube: 8 mm
weight: 0,010 Kg

GZR-V20004/6/8

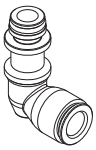

swivel low elbow fitting
(package 50 pcs.)
GZR-V20004 tube: 4 mm
weight: 0,013 Kg
GZR-V20006 tube: 6 mm
weight: 0,014 Kg
GZR-V20008 tube 8 mm
weight: 0,015 Kg

GZR-V20L004/6/8

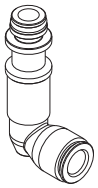

swivel high elbow fitting
(package 50 pcs.)
GZR-V20L004 tube: 4 mm
weight: 0,017 Kg
GZR-V20L006 tube: 6 mm
weight: 0,021 Kg
GZR-V20L008 tube: 8 mm
weight: 0,027 Kg

TIM06M/10M/20M	TIM06B/10B	D-530C-100/200
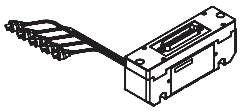	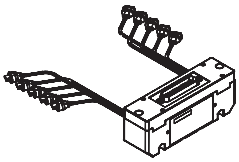	
male connector 25 poles pre-wired for monostable valves (M) **TIM06M** weight: 0,096 Kg (max 6M) **TIM10M** weight: 0,103 Kg (max 10M) **TIM20M** weight: 0,127 Kg (max 20M)	male connector 25 poles pre-wired for bistable valves (B) **TIM06B** weight: 0,11 Kg (max 6B) **TIM10B** weight: 0,118 Kg (max 10B)	micro double-pole flying connector: stripped and tinned wires with protection guard (package 100 pcs.) **D-530C-100** weight: 0,0047 Kg (wire length 100 cm) **D-530C-200** weight: 0,0093 Kg (wire length 200 cm)

Overall dimensions of fittings on intermediate plates for exhausts 3-5

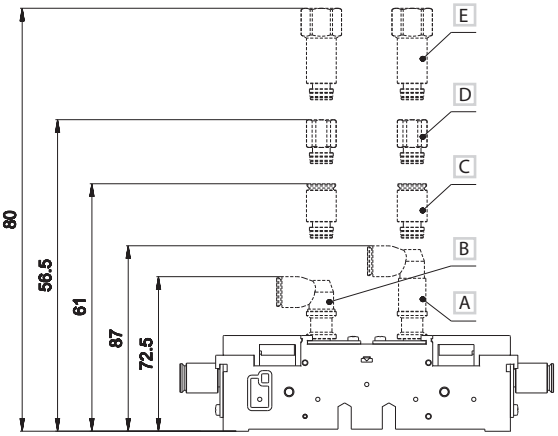

A Swivel high elbow fitting for tube Ø8
B Swivel low elbow fitting for tube Ø8
C Straight fitting for tube Ø8
D Fitting for silencer G1/8
E Fitting for silencer G1/4

Electrical connections

TSCF000

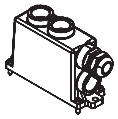

- female connector
  25 poles D-sub
  without cable

TSCF24S0300
TSCF24S0500
TSCF24S1000

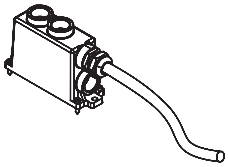

- flying female connector sub D
  according to CEI 20-22 O.R. II
  (upon request)
  prewired for 24 coils
  M3 x 12 fixing screws

Colour identification according to standard **DIN 47100**

Female connector **D-SUB 25 poles**
for **12+12 coils**

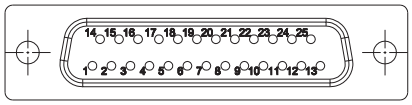

			TSCF16D		TSCF24S	
PIN N°	**Operator side**	**Valve N°**	**Colour**	**Coil**	**Colour**	**Coil**
1	14	1	white	1	white	1
2	12	1	brown	2	brown	2
3	14	2	green	3	green	3
4	12	2	grey	4	yellow	4
5	14	3	pink	5	grey	5
6	12	3	blue	6	pink	6
7	14	4	violet	7	blue	7
8	12	4	grey-pink	8	red	8
9	14	5	red-blue	9	black	9
10	12	5	white-green	10	violet	10
11	14	6	brown-green	11	grey-pink	11
12	12	6	white-yellow	12	red-blue	12
13	14	7	yellow-brown	13	white-green	13
14	12	7	white-grey	14	brown-green	14
15	14	8	grey-brown	15	white-yellow	15
16	12	8	white-pink	16	yellow-brown	16
17	14	9	white-brown	-	white-grey	17
18	12	9	white-blue	-	grey-brown	18
19	14	10	black	com 0V	white-pink	19
20	12	10	black	com 0V	pink-brown	20
21	14	11	red	24V INP	white-blue	21
22	12	11	red	24V INP	brown-blue	22
23	14	12	yellow	com 0V	white-red	23
24	-	-	yellow	com 0V	brown-red brown-black shield	com 0V com 0V shield
25	12	12	shield	shield	white-black	24

AC

MIXED threaded valves G1/8 - G 1/4 - G1/2

- Mixed commutation system (spool - poppet)
- High flow rate
- Quick response time
- High cycles
- Control: manual, mechanical, pneumatic, electric
- Modular sub-bases

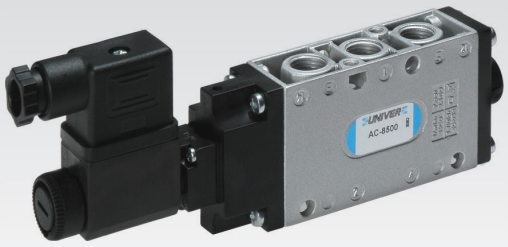

Available ATEX version upon request

CE Ex II 2Gc IIC T5 II 2Dc T100°C

CE Ex II 3 GD c nA II T5-10°C ≤ Ta ≤ 45°C

TECHNICAL CHARACTERISTICS

Ambient temperature	-10 ÷ +45 °C		
Fluid temperature	max +50 °C		
Fluid	50 µm filtered air, with or without lubrication		
Commutation system	poppet mixed system		
Ways/Positions	**5/2**		
Pressure	10 bar max		
Control	pneumatic, electric, mechanical		
Return	pneumomechanical spring, pneumatic, electric		
Connections	**G1/8**	**G1/4**	**G1/2**
Nominal Ø (mm)	6	8	15
Nominal flow rate (Nl/min)	1080	1600	4600

CONSTRUCTIVE CHARACTERISTICS

Valve body	die-cast aluminium
Seals	nitrile rubber, polyurethane
Actuators	technopolymer
Spool	aluminium

ELECTRIC CHARACTERISTICS

	G1/8 G1/4	**G1/2**
Electropilot	U1	U2
Coil	DA	DB
Power consumption	3,5 W (DC) - 5 VA (AC)	11 W (DC) - 10 VA (AC)
Connector	AM 5110	AM 5111
Voltage	12 V DC - 24 V DC - 24 V AC - 110 V AC - 230 V AC	
Manual override	impulse screw - 2 positions	

Flow rate characteristics

>> G1/8

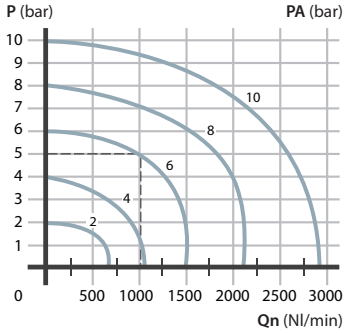

>> G1/4

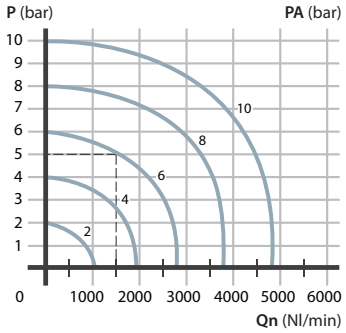

>> G1/2

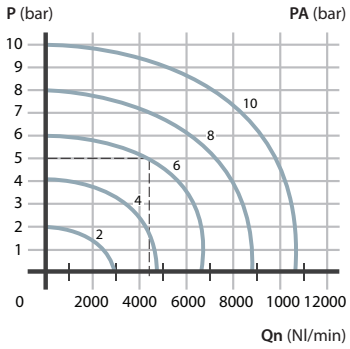

P = Working pressure
PA = Supply pressure
Qn = Flow rate

Indirect mechanical control for use with pneumatic, mechanical and manual actuators

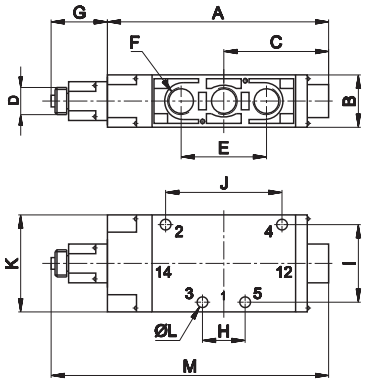

	G1/8	G1/4	G1/2
A	99	114	163
B	25	27	40
C	47	54	83
D	M14x1	M14x1	M14x1
E	36	44	80
F	G1/8	G1/4	G1/2
G	27	27	27
H	18	22	40
I	26	40	50
J	36	60	108
K	40	50	63
L	4,5	5,5	6,5
M	126	141	190

1 = Supply port
2 - 4 = Use
3 - 5 = Exhaust

14 = Control
12 = Return

	Symbol	Connection	Control	Return	Pressure	Weight	Part no.
			14	12	bar	Kg	
5/2	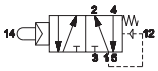	G1/8	ball pushrod	pneumomechanical spring	1,8÷10	0,27	**AC-7010**
		G1/4			2,3÷10	0,28	**AC-8010**
		G1/2			2÷10	0,33	**AC-9010**

MANUAL ACTUATORS

	Recessed button	■BLACK ■RED ■GREEN	AI-3511 AI-3512 AI-3513
	Head button	■RED ■BLACK ■RED ■BLACK	AI-3514 AI-3516 AI-3514D AI-3516D
	Button	■GREEN ■RED ■BLACK	AI-3515 AI-3517 AI-3519
	Rotating selector	■BLACK ■BLACK	AI-3520 AI-3521
	Rotating lever selector	■BLACK ■BLACK	AI-3522 AI-3523
	Lever operator	■BLACK	AI-3524
	Omni-directional operator	■BLACK	AI-3525
	Push-pull operator	■BLACK	AI-3526

PNEUMATIC AND MECHANICAL ACTUATORS

	Pneumatic actuator	AI-3550
	Amplified pneumatic actuator	AI-3551
	Roller operator 1 position	AI-3560
	Ball-push operator 1 position	AI-3562
	Operator with omni-directional antenna 1 position	AI-3563
	Roller lever operator 1 position	AI-3570
	Articulated roller lever opeartor 1 position Complete actuation with stroke 2,5 mm, max stroke 4,7 mm	AI-3571
	Key operator 1 position	AI-3572

For actuator dimensions refer to section **"Accessories>Actuators and buttons"**

Indirect control
for panel mounting actuators Ø 22

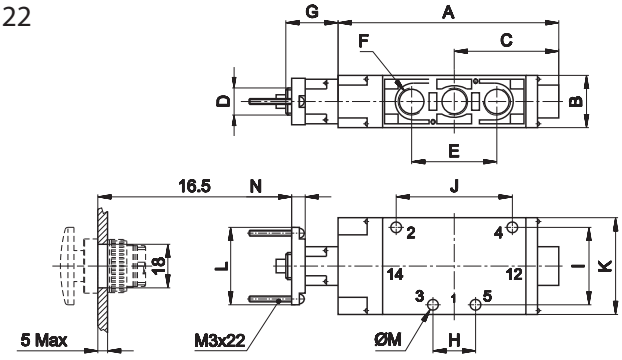

	G1/8	G1/4	G1/2
A	99	114	163
B	25	27	40
C	47	54	83
D	M14x1	M14x1	M14x1
E	36	44	80
F	G1/8	G1/4	G1/2
G	27	27	27
H	18	22	40
I	26	40	50
J	36	60	108
K	40	50	63
L	40	40	40
M	4,5	5,5	6,5
N	7	7	7

1 = Supply port
2 - 4 = Use
3 - 5 = Exhaust

14 = Control
12 = Return

	Symbol	Connection	Control	Return	Pressure	Weight	Part no.
			14	12	bar	Kg	
5/2		G1/8	ball pushrod	pneumomechanical spring	1,8÷10	0,28	**AC-7013**
		G1/4			2,3÷10	0,29	**AC-8013**
		G1/2			2÷10	0,84	**AC-9013**
5/2	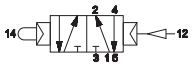	G1/8	ball pushrod	pneumatic amplified	1÷10	0,29	**AC-7013P**
		G1/4			1÷10	0,28	**AC-8013P**
		G1/2			1÷10	0,83	**AC-9013P**

MANUAL ACTUATORS

	Recessed button	■BLACK ■RED ■GREEN	AI-3511Q AI-3512Q AI-3513Q
	Head button	■RED ■BLACK ■RED ■BLACK	AI-3514Q AI-3516Q AI-3514QD AI-3516QD
	Button	■GREEN ■RED ■BLACK	AI-3515Q AI-3517Q AI-3519Q
	Rotating selector	■BLACK ■BLACK	AI-3520Q AI-3521Q
	Rotating lever selector	■BLACK ■BLACK	AI-3522Q AI-3523Q
	Lever operator	■BLACK	AI-3524Q
	Omni-directional operator	■BLACK	AI-3525Q
	Push-pull operator	■BLACK	AI-3526Q

For actuator dimensions refer to section**"Accessories>Actuators and buttons"**

Single/double **pneumatic** impulse

	Symbol	Connection	Control 14	Return 12	Pressure bar	Times (ms) En.	Times (ms) De-en.	Weight Kg	Part no.
	SINGLE PNEUMATIC IMPULSE								
5/2	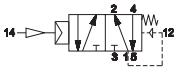	G1/8	pneumatic amplified	pneumomechanical spring	1,8÷10	8	10	0,22	**AC-7100**
		G1/4			2,3÷10	10	10	0,23	**AC-8100**
		G1/2			2÷10	10	10	0,76	**AC-9100**
	DOUBLE PNEUMATIC IMPULSE								
5/2	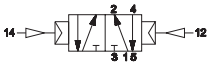	G1/8	pneumatic amplified	pneumatic amplified	1÷10	5	10	0,23	**AC-7120**
		G1/4			0,8÷10	6	6	0,21	**AC-8120**
		G1/2			0,8÷10	8	8	0,77	**AC-9120**

Single pneumatic impulse

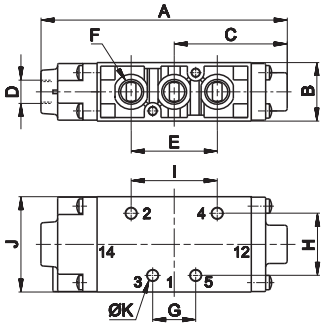

1 = Supply port
2 - 4 = Use
3 - 5 = Exhaust
14 = Control
12 = Return

	A	B	C	D	E	F	G	H	I	J	K
G1/8	103	25	47	G1/8	36	G1/8	18	26	36	40	4,5
G1/4	117	27	54	G1/8	44	G1/4	22	40	60	50	5,5
G1/2	165	40	82,5	G1/8	80	G1/2	40	50	108	63	6,5

Double pneumatic impulse

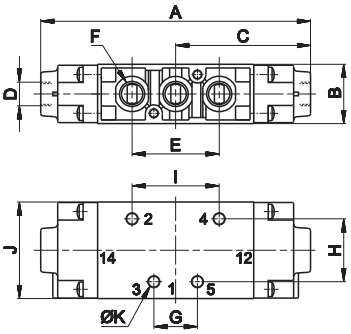

1 = Supply port
2 - 4 = Use
3 - 5 = Exhaust
14 = Control
12 = Return

	A	B	C	D	E	F	G	H	I	J	K
G1/8	112	25	56	G1/8	36	G1/8	18	26	36	40	4,5
G1/4	126,5	25	63	G1/8	44	G1/4	22	40	60	50	5,5
G1/2	165	40	82,5	G1/8	80	G1/2	40	50	108	63	6,5

Single/double **electric** impulse

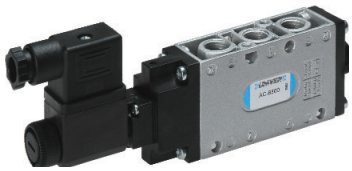

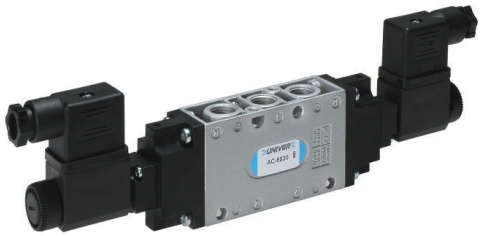

	Symbol	Connection	Control 14	Return 12	Pressure bar	Times (ms) En.	Times (ms) De-en.	Weight Kg	Part no.
	SINGLE ELECTRIC IMPULSE								
5/2	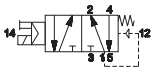	G1/8	electric amplified	pneumomechanical spring	1,8÷10	18	20	0,27	**AC-7500**
		G1/4			2,3÷10	22	22	0,28	**AC-8500**
		G1/2			2÷10	23	30	1,1	**AC-9500**
	DOUBLE ELECTRIC IMPULSE								
5/2	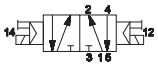	G1/8	electric amplified	electric amplified	1÷10	14	14	0,33	**AC-7520**
		G1/4			0,8÷10	14	14	0,31	**AC-8520**
		G1/2			0,8÷10	16	16	1,1	**AC-9520**

Single electric impulse

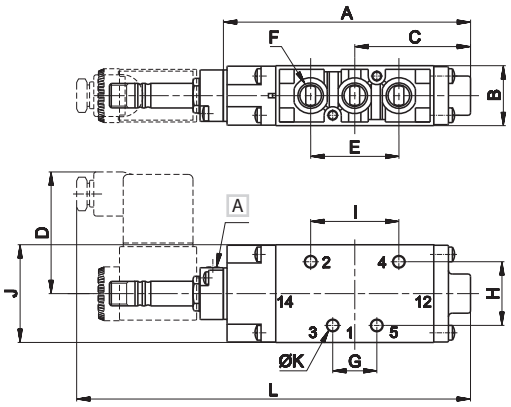

A Manual override

1 = Supply port
2 - 4 = Use
3 - 5 = Exhaust
14 = Control
12 = Return

	A	B	C	D	E	F	G	H	I	J	K	L
G1/8	101	25	47	50	36	G1/8	18	26	36	40	4,5	164
G1/4	116	27	54	50	44	G1/4	22	40	60	50	5,5	180
G1/2	165	40	83	48	80	G1/2	40	50	108	63	6,5	241

Double electric impulse

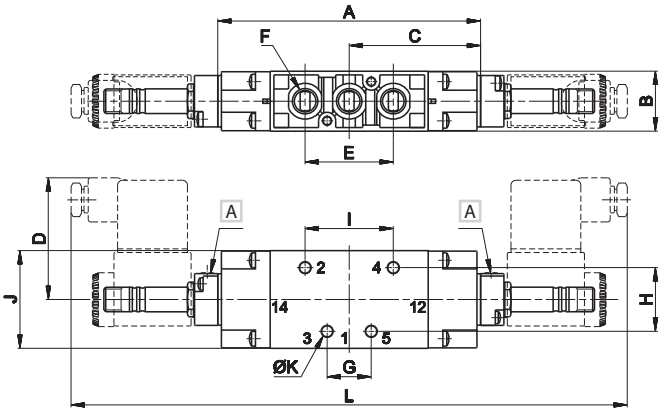

A Manual override

1 = Supply port
2 - 4 = Use
3 - 5 = Exhaust
14 = Control
12 = Return

	A	B	C	D	E	F	G	H	I	J	K	L
G1/8	107	25	53,5	50	36	G1/8	18	26	36	40	4,5	227
G1/4	124	27	62	50	44	G1/4	22	40	60	50	5,5	252
G1/2	164	40	80,5	48	80	G1/2	40	50	108	63	6,5	317

For technical data of coils, refer to section **"Accessories>Coils"**
For external servoassisted pilot, use AM - 5148 plates (refer to next pages)
Electrovalves are supplied without coil, connector and locking ring

Modular sub-base **G1/8**

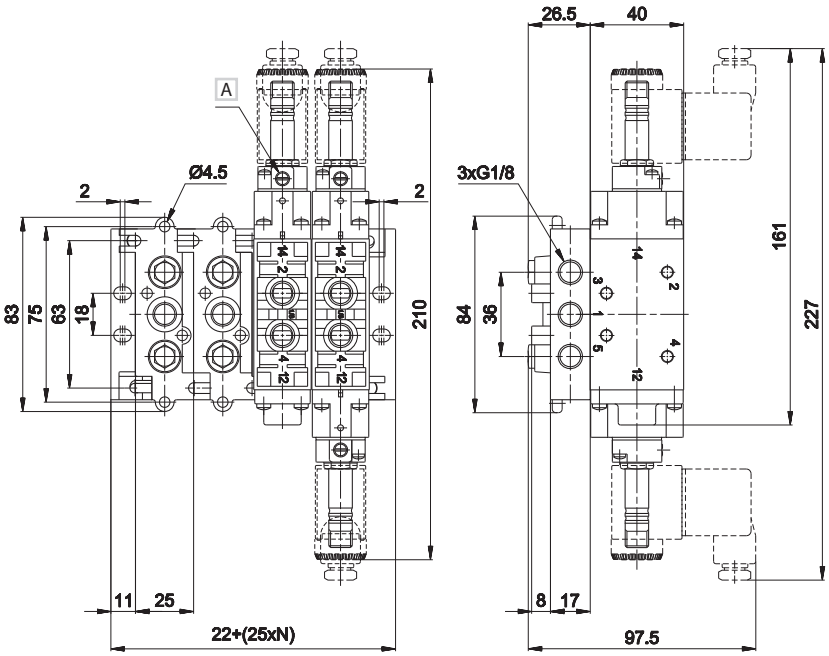

A Manual override

1 = Supply port
2 - 4 = Use
3 - 5 = Exhaust
14 = Control
12 = Return

AC-7900	AC-7905
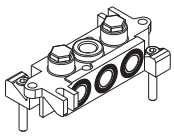	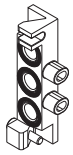
Sub-base with connections **G1/8** weight: 0,15 Kg	Inlet plate **MIXED system 5/2 - G1/8** weight: 0,06 Kg

3

Modular sub-base **G1/4**

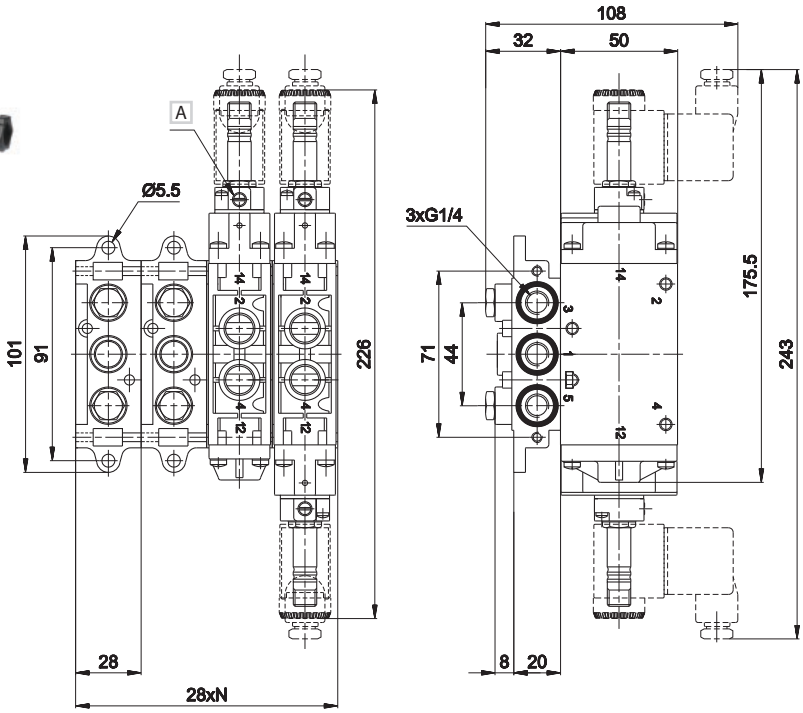

A Manual override

1 = Supply port
2 - 4 = Use
3 - 5 = Exhaust
14 = Control
12 = Return

AC-8900

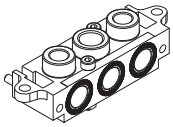

Sub-base with threaded connections **G1/4**
Screws are supplied separately
weight: 0,22 Kg

Subject to change

AM-5148

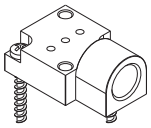

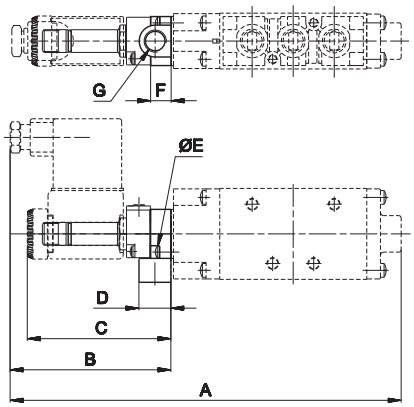

	G1/8	G1/4
A	171,5	186
B	70,5	70,5
C	63	63
D	14	14
E	2,9x10	2,9x10
F	9	9
G	G1/8	G1/8

Plate for external servoassisted pilot
weight: 0,03 Kg

AM-5151

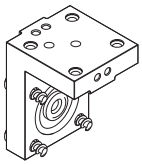

AM-5151 + AM-5148

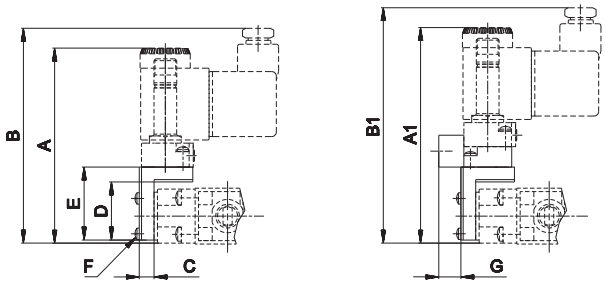

	G1/8	G1/4
A	87,7	88,7
A1	96,7	97,7
B	95,5	96,5
B1	104,5	105,5
C	6,5	6,5
D	25,5	25,5
E	32	32
F	2,9x10	2,9x10
G	9,7	9,7

"H" option solenoid square
weight: 0,035 Kg

AM-5152

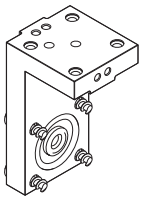

AM-5152 + AM-5148

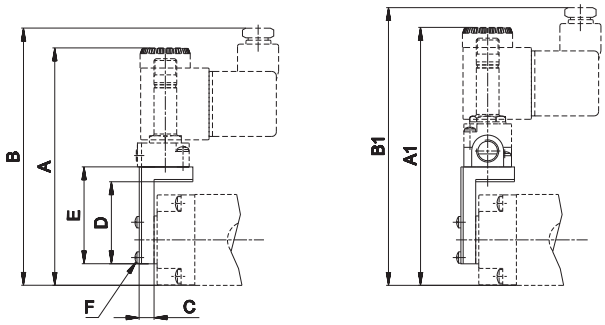

	G1/8	G1/4
A	106	111
A1	115	120
B	113,5	118,5
B1	122,5	127,5
C	6,5	6,5
D	36	36
E	42,5	42,5
F	2,9x10	2,9x10

"P" option solenoid square
weight: 0,05 Kg

CH

2/2 - 3/2 G1/8 poppet valves

Main features:
- Closed centers
- High flow rate
- Quick response time
- Suitable for heavy duties and where the number of mechanical operation is high

Available ATEX version upon request

II 2Gc IIC T5 II 2Dc T100°C

TECHNICAL CHARACTERISTICS

Ambient temperature	-10 ÷ +45 °C
Fluid temperature	Max + 50 °C
Fluid	50 µm filtered air, with or without lubrication
Commutation system	poppet system
Ways/Positions	**2/2 NC, 3/2 NC, 2/2 NO, 3/2 NO**
Pressure	Max 10 bar
Control	manual, mechanical
Return	mechanical spring
Connections	G1/8
Nominal Ø	5 mm
Nominal flow rate (Nl/min)	**NC** = 600 **NO** = 550

CONSTRUCTIVE CHARACTERISTICS

Valve body	zamak
Seals	nitrile rubber
Actuators	zinc-plated steel/technopolymer
Spool	nickel-plated brass

Flow rate characteristics

>> 3/2 NC

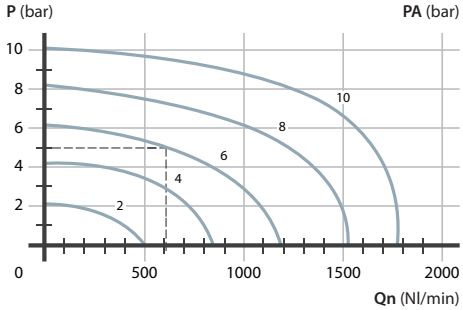

>> 3/2 NO

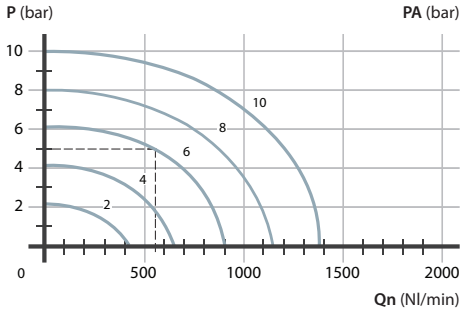

P = Working pressure
PA = Supply pressure
Qn = Flow rate

3
VALVES

Roller lever - spring

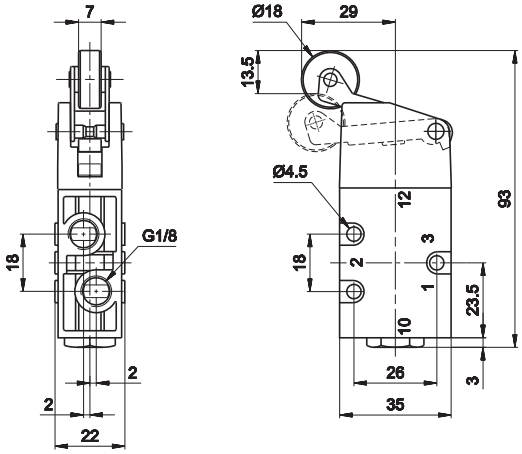

	Symbol	Flow rate (Nl/min)	Force N	Weight Kg	Part no.
3/2 NC	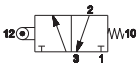	600	21	0,2	**CH-250**
2/2 NC	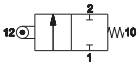	600	21	0,2	**CH-252**
3/2 NO	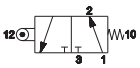	550	15	0,2	**CH-254**
2/2 NO	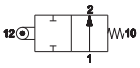	550	15	0,2	**CH-256**

1 = Supply port
2 = Use
3 = Exhaust
12 = Control
10 = Return

Uni-directional roller lever - spring

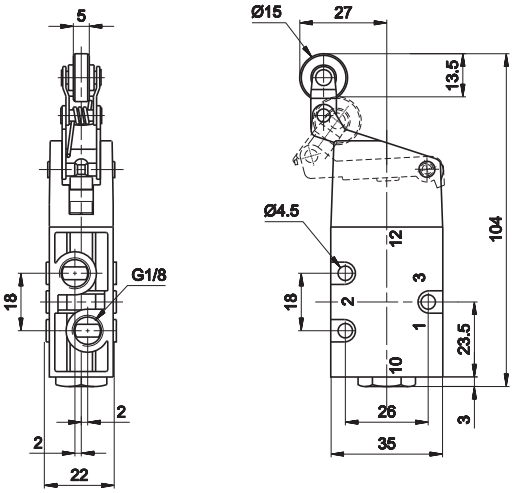

	Symbol	Flow rate (Nl/min)	Force N	Weight Kg	Part no.
3/2 NC	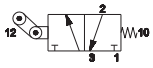	600	16	0,21	**CH-260**
2/2 NC	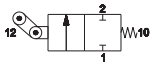	600	16	0,21	**CH-262**
3/2 NO	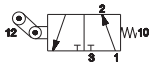	550	12	0,21	**CH-264**
2/2 NO	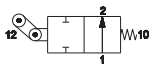	550	12	0,21	**CH-266**

1 = Supply port
2 = Use
3 = Exhaust
12 = Control
10 = Return

Ball-push - spring

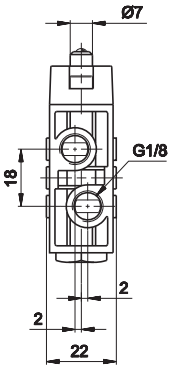

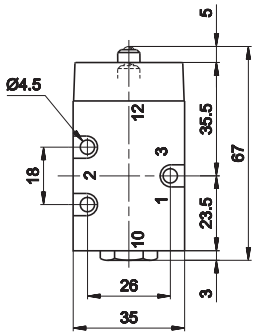

1 = Supply port
2 = Use
3 = Exhaust
12 = Control
10 = Return

	Symbol	Flow rate (Nl/min)	Force N	Weight Kg	Part no.
3/2 NC	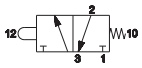	600	51	0,18	**CH-270**
2/2 NC	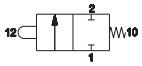	600	51	0,18	**CH-272**
3/2 NO	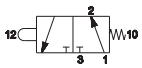	550	39	0,18	**CH-274**
2/2 NO	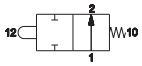	550	39	0,18	**CH-276**

Button lever - spring

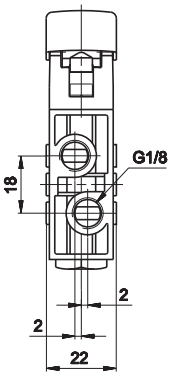

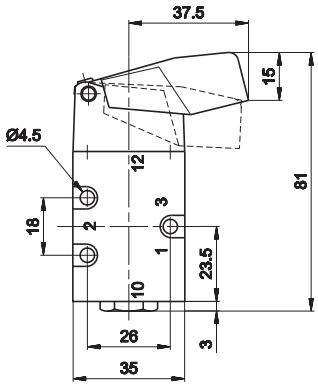

1 = Supply port
2 = Use
3 = Exhaust
12 = Control
10 = Return

	Symbol	Flow rate (Nl/min)	Force N	Weight Kg	Part no.
3/2 NC	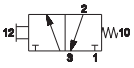	600	18	0,18	**CH-280**
2/2 NC	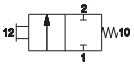	600	18	0,18	**CH-282**
3/2 NO	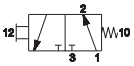	550	14	0,18	**CH-284**
2/2 NO	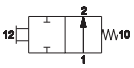	550	14	0,18	**CH-286**

Red button lever

AF

G1/8 ÷ G1 1/2 Poppet valves for compressed air

- Wide range: G1/8 - G1/4 - G3/8 - G1/2 - G3/4 - G1 - G1 1/2
- Original Univer poppet system appreciated for decades
- Suitable for applications where high flow rate and high cycles rates are required
- G1 - 2/2 version for blowing

Available ATEX version upon request

II 2Gc IIC T5 II 2Dc T100°C

II 3 GD c nA II T5-10°C ≤ Ta ≤ 45°C

TECHNICAL CHARACTERISTICS

Ambient temperature	+50 °C max						
Fluid temperature	-5 ÷ +60 °C						
Fluid	50 µm filtered air, with or without lubrication						
Commutation system	poppet						
Ways/Positions	**2/2 NC (upon request), 3/2 NC, 3/2 NO, 3/2 NC-NO**						
Pressure	max 10 bar						
Control	pneumatic, indirect electropneumatic						
Return	pneumomechanical spring						
Connections	**G 1/8**	**G 1/4**	**G 3/8**	**G 1/2**	**G 3/4**	**G 1**	**G 1 1/2**
Nominal Ø (mm)	5,5	8	10	15	19	25	39
Nominal flow rate (Nl/min)	580	1100	1500	5400	6500	13500	35000

CONSTRUCTIVE CHARACTERISTICS

Valve body	**G1/8 ÷ G1** = zamak
	G1 1/2 = aluminium
Seals	polyurethane conical poppets and Vulkollan diaphragm
Actuators	**G1/8 ÷ G1** = zamak
	G1 1/2 = aluminium
Spool	**G1/8 ÷ G3/8** = aluminium
	G1/2 ÷ G1 1/2 = steel + plastic

ELECTRIC CHARACTERISTICS

	G1/8 G3/8	**G1/4 ÷ G1 1/2**
Electropilot	U1	U2
Coil	DA	DB
Power consumption	3,5 W (DC) - 5 VA (AC)	11 W (DC) - 10 VA (AC)
Connector	AM-5110	AM-5111
Voltage	12 V DC - 24 V DC - 24 V AC - 110 V AC - 230 V AC	
Manual override	impulse screw - 2 positions	

G1/8 - G1/4 - G3/8 Electrovalves

3/2 NC **G1/8**

AF-2500

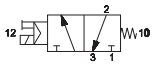

3/2 NO **G1/8**

AF-2501

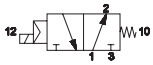

3/2 NC **G1/4 - G3/8**

AF-2510
AF-2517
AF-2520
AF-2524

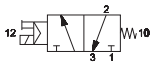

3/2 NO **G1/4 - G3/8**

AF-2511
AF-2518
AF-2521
AF-2525

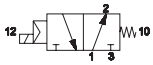

	Connect.	Control	Return	Flow rate	Ø	Resp. Time (ms)		Pressure bar		Weight	Coil	Part no.
		12	10	(Nl/min)	mm	En.	De-en.	min.	max.	Kg		
3/2 NC	G1/8	electric amplified	pneumomechanical spring	580	5,5	15	20	1,5	10	0,25	U1	**AF-2500**
	G1/4	electric amplified	pneumomechanical spring	1100	8	20	23	1,6	10	0,58	U1	**AF-2510**
	G1/4	electric amplified	pneumomechanical spring	1100	8	20	23	1,6	10	0,70	U2	**AF-2517**
	G3/8	electric amplified	pneumomechanical spring	1500	10	20	23	1,6	10	0,56	U1	**AF-2520**
	G3/8	electric amplified	pneumomechanical spring	1500	10	20	23	1,6	10	0,70	U2	**AF-2524**
3/2 NO	G1/8	electric amplified	pneumomechanical spring	580	5,5	15	20	1,5	10	0,25	U1	**AF-2501**
	G1/4	electric amplified	pneumomechanical spring	1100	8	15	20	1,6	10	0,58	U1	**AF-2511**
	G1/4	electric amplified	pneumomechanical spring	1100	8	15	20	1,6	10	0,70	U2	**AF-2518**
	G3/8	electric amplified	pneumomechanical spring	1500	10	15	20	1,6	10	0,56	U1	**AF-2521**
	G3/8	electric amplified	pneumomechanical spring	1500	10	15	20	1,6	10	0,70	U2	**AF-2525**

G1/8

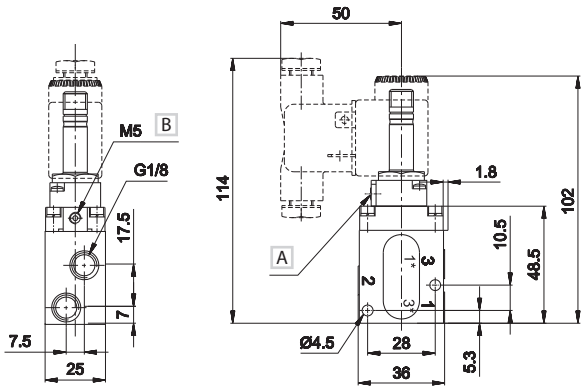

NC

1 = Supply port
2 = Use
3 = Exhaust

NO

1* = Supply port
2 = Use
3* = Exhaust

A Manual override
B External servoassistance of the pilot

G1/4 - G3/8

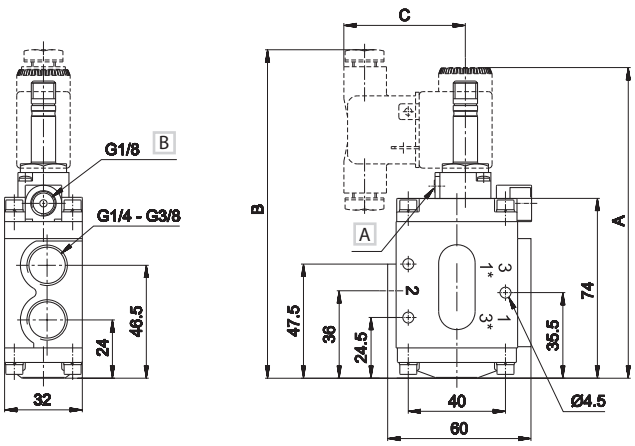

NC

1 = Supply port
2 = Use
3 = Exhaust

NO

1* = Supply port
2 = Use
3* = Exhaust

A Manual override
B External servoassistance of the pilot

	A	B	C
U1	129	136	50
U2	140,5	150	51,5

Upon request:
- external servoassistance of the pilot
- G1/4 - G3/8 U2 without manual override
- 2/2 version insert plug on the drain

Electrovalves are supplied without coil, connector and locking ring

Subject to change

G1/2 - G3/4 - G1 - G1 1/2 Electrovalves

3/2 NC **G1/2 - G3/4 - G1**

AF-2530
AF-2540
AF-2545

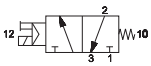

3/2 NO **G1/2 - G3/4 - G1**

AF-2531
AF-2541
AF-2546

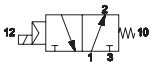

3/2 NC **G1 1/2**

AF-2565

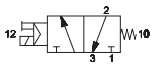

3/2 NO **G1 1/2**

AF-2561

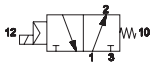

	Connect.	Control	Return	Flow rate	Ø	Resp. Time (ms)		Pressure bar		Weight	Coil	Part no.
		12	10	(Nl/min)	mm	En.	De-en.	min.	max.	Kg		
3/2 NC	G1/2	electric amplified	pneumomechanical spring	5400	15	17	27	2	10	1,19	U2	**AF-2530**
	G3/4	electric amplified	pneumomechanical spring	6500	19	17	27	2	10	1,13	U2	**AF-2540**
	G1	electric amplified	pneumomechanical spring	13500	25	20	32	2,2	10	1,62	U2	**AF-2545**
	G1 1/2	electric amplified	pneumomechanical spring	35000	39	47	22	2,5	10	2,27	U2	**AF-2565**
3/2 NO	G1/2	electric amplified	pneumomechanical spring	5400	15	30	22	3	10	1,19	U2	**AF-2531**
	G3/4	electric amplified	pneumomechanical spring	6500	19	30	22	3	10	1,13	U2	**AF-2541**
	G1	electric amplified	pneumomechanical spring	13500	25	28	23	3	10	1,62	U2	**AF-2546**
	G1 1/2	electric amplified	pneumomechanical spring	35000	39	55	20	3	10	2,27	U2	**AF-2561**

G1/2 - G3/4 - G1

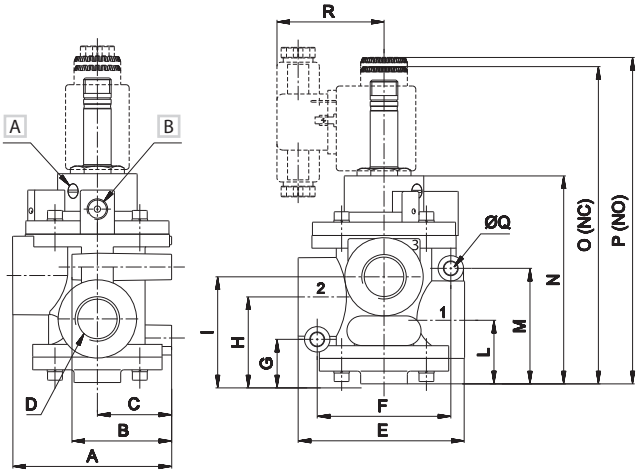

1 = Supply port
2 = Use
3 = Exhaust

A Manual override
B External servoassistance of the pilot

	A	B	C	D	E	F	G	H	I	L	M	N	O	P	Q	R
G1/2	75	47	35	G1/2	78,5	63	21	41	50,5	30	54,5	100	150	154	6,4	50,5
G3/4	75	47	35	G3/4	78,5	63	21	41	50,5	30	54,5	100	150	154	6,4	50,5
G1	89	55	40	G1	101	76	25,5	51	64	38	62,5	115	167	175	8,4	50

G1 1/2

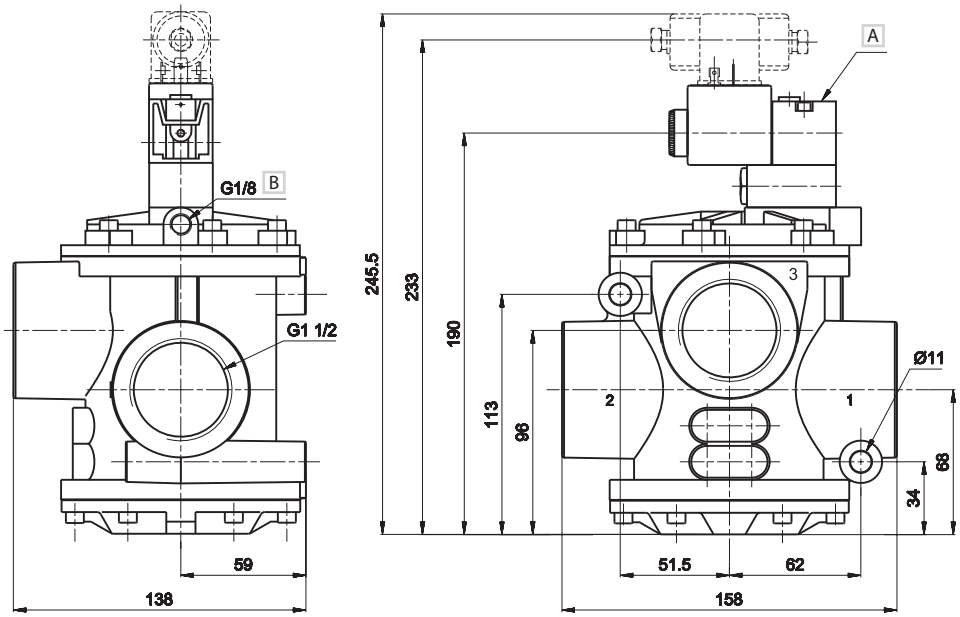

1 = Supply port
2 = Use
3 = Exhaust

A Manual override
B External servoassistance of the pilot

Upon request:
- external servoassistance of the pilot
Electrovalves are supplied without coil, connector and locking ring

G1/8 - G1/4 - G3/8 Servo valves

3/2 NC **G1/8**

AF-2600

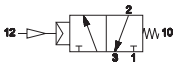

3/2 NO **G1/8**

AF-2700

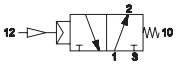

3/2 NC **G1/4 - G3/8**

AF-2601
AF-2606

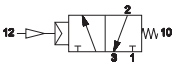

3/2 NO **G1/4 - G3/8**

AF-2701
AF-2706

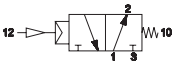

	Connect.	Control	Return	Flow rate	Ø	Resp. Time (ms)		Pressure bar		Weight	Part no.
		12	10	(Nl/min)	mm	En.	De-en.	supply	control	Kg	
3/2 NC	G1/8	pneumatic amplified	pneumomechanical spring	580	5,5	5	8	6	3,5	0,21	**AF-2600**
	G1/4	pneumatic amplified	pneumomechanical spring	1100	8	5	7	6	4	0,54	**AF-2601**
	G3/8	pneumatic amplified	pneumomechanical spring	1500	10	5	7	6	4	0,52	**AF-2606**
3/2 NO	G1/8	pneumatic amplified	pneumomechanical spring	580	5,5	5	8	6	3,5	0,21	**AF-2700**
	G1/4	pneumatic amplified	pneumomechanical spring	1100	8	5	7	6	4	0,54	**AF-2701**
	G3/8	pneumatic amplified	pneumomechanical spring	1500	10	5	7	6	4	0,52	**AF-2706**

G1/8

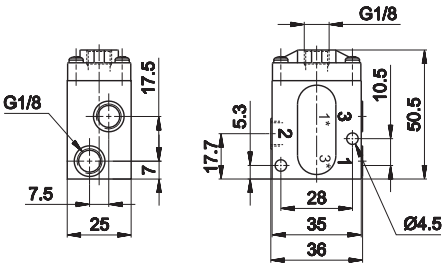

NC

1 = Supply port
2 = Use
3 = Exhaust

NO

1* = Supply port
2 = Use
3* = Exhaust

G1/4 - G3/8

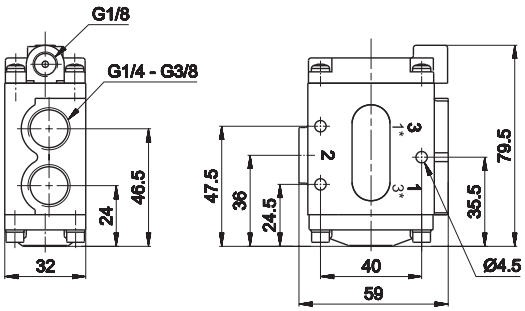

NC

1 = Supply port
2 = Use
3 = Exhaust

NO

1* = Supply port
2 = Use
3* = Exhaust

Upon request:
2/2 version insert plug on the drain

G1/2 - G3/4 - G1 - G1 1/2 Servo valves

3/2 NC-NO **G1/2 - G3/4 - G1**

AF-2603
AF-2610
AF-2615

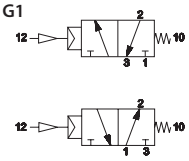

3/2 NC-NO **G1 1/2**

AF-2620

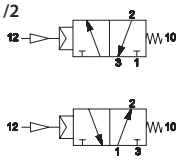

3/2 NC-NO

Connect.	Control	Return	Flow rate	Ø	Resp. Time (ms)		Pressure bar		Weight	Part no.
	12	10	(Nl/min)	mm	En.	De-en.	supply	control	Kg	
G1/2	pneumatic amplified	pneumomechanical spring	5400	15	7	10	6	4	1,27	**AF-2603**
G3/4	pneumatic amplified	pneumomechanical spring	6500	19	7	10	6	4	1,10	**AF-2610**
G1	pneumatic amplified	pneumomechanical spring	13500	25	10	12	6	4	1,59	**AF-2615**
G1 1/2	pneumatic amplified	pneumomechanical spring	35000	39	36	15	6	4	2,19	**AF-2620**

G1/2 - G3/4 - G1

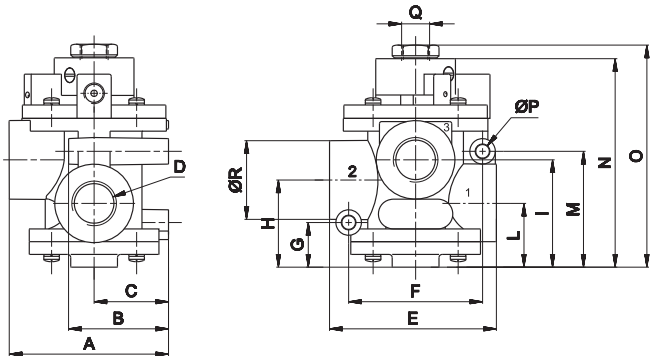

1 = Supply port
2 = Use
3 = Exhaust

	A	B	C	D	E	F	G	H	I	L	M	N	O	P	Q	R
G1/2	75	47	35	G1/2	78,5	63	21	41	50,5	30	54,5	100	105	6,4	G1/4	37
G3/4	75	47	35	G3/4	78,5	63	21	41	50,5	30	54,5	100	105	6,4	G1/4	37
G1	88,5	55	40	G1	101	76	25,5	51	64	38	62,5	115	120,5	8,4	G1/4	45

G1 1/2

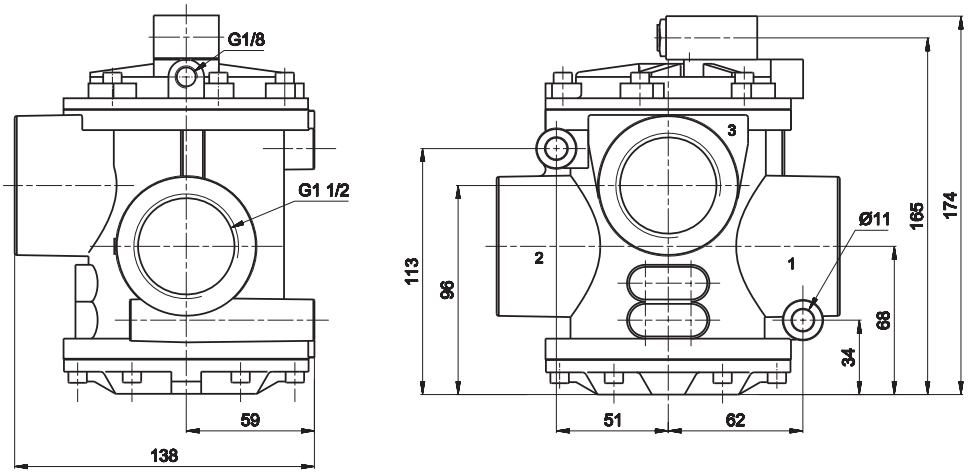

1 = Supply port
2 = Use
3 = Exhaust

G1 - 2/2 Electrovalve for blowing

2/2 NC **G1**
AF-2550

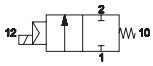

2/2 NC **G1**
AF-2551

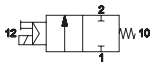

2/2 NC **G1**
AF-2552

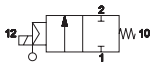

	Connect.	Control	Return	Flow rate	Ø	Resp. Time (ms)		Pressure bar				Weight	Part no.
		12	10	(Nl/min)	mm	En.	De-en.	min.	max	supply	control	Kg	
2/2 NC	G1	electric amplified	pneumomechanical spring	16000	25	23	55	2	10	-	-	1,06	**AF-2550**
	G1	electric amplified	pneumomechanical spring	16000	25	23	55	2	10	-	-	1,06	**AF-2551**
	G1	electric amplified	pneumomechanical spring	16000	25	23	35	-	-	6	4	1,06	**AF-2552**

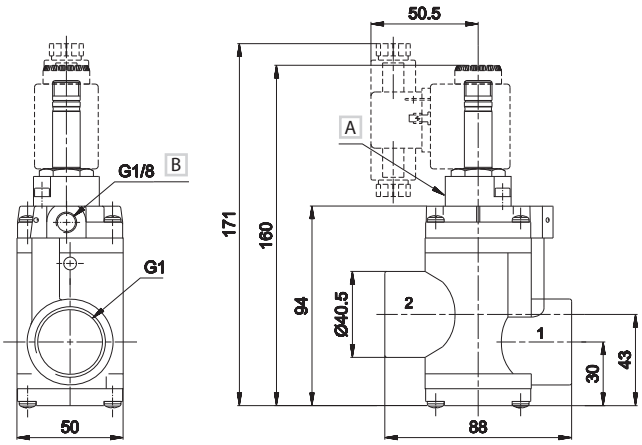

1 = Supply port
2 = Use

A Manual override **AF-2551**
B External servoassistance of the pilot **AF-2552**

3

G1 - 2/2 Servovalve for blowing

2/2 NC **G1**
AF-2617

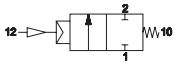

	Connect.	Control	Return	Flow rate	Ø	Resp. Time (ms)		Pressure bar		Weight	Part no.
		12	10	(Nl/min)	mm	En.	De-en.	supply	control	Kg	
2/2 NC	G1	pneumatic amplified	pneumomechanical spring	16000	25	12	25	6	4	1	**AF-2617**

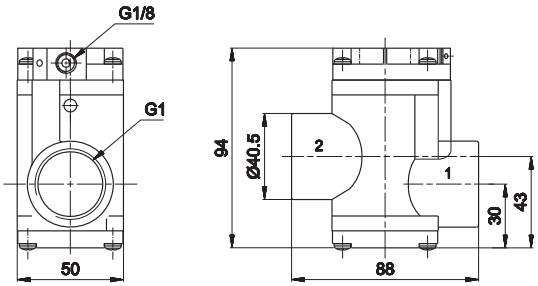

1 = Supply port
2 = Use

Electrovalves are supplied without coil, connector and locking ring

Subject to change

AG

Poppet valves for vacuum G1/8 ÷ G1 1/2

- A complete range: G1/8 - G1/4 - G3/8 - G1/2 - G3/4 - G1 - G1 1/2
- Original Univer poppet system appreciated for decades
- Servoassisted version
- A complete range of solenoid valves and pneumatic valves for vacuum with connection from G1/8 ÷ G1 1/2 to satisfy all requirements
- The internal system ensures high reliability and long life

Available ATEX version upon request

CE Ex II 2Gc IIC T5 II 2Dc T100°C

CE Ex II 3 GD c nA II T5-10°C ≤ Ta ≤ 45°C

TECHNICAL CHARACTERISTICS

Ambient temperature	+50 °C						
Fluid temperature	-5 ÷ +60 °C						
Fluid	50 µm filtered air, with or without lubrication - vacuum						
Commutation system	poppet						
Ways/Positions	**2/2 NC (upon request), 3/2 NC, 3/2 NO, 3/2 NC-NO**						
Control	indirect vacuum						
Return	automatic by vacuum						
Connections	**G 1/8**	**G 1/4**	**G 3/8**	**G 1/2**	**G 3/4**	**G 1**	**G 1 1/2**
Nominal Ø (mm)	5,5	8	10	15	19	25	39

CONSTRUCTIVE CHARACTERISTICS

Valve body	**G1/8 ÷ G1** = zamak
	G1 1/2 = aluminium
Seals	**valve for vacuum with external air operation**
	polyurethane conical poppets and Vulkollan diaphragm
	valve for direct vacuum with external vacuum operation
	silicon poppets
Actuators	**G1/8 ÷ G1** = zamak
	G1 1/2 = aluminium
Spool	**G1/8 ÷ G3/8** = aluminium
	G1/2 ÷ G1 1/2 = steel + plastic

ELECTRIC CHARACTERISTICS

	G1/8	**G1/4 ÷ G1 1/2**
Electropilot	U1	U2
Coil	DA	DB
Power consumption	3,5 W (DC) - 5 VA (AC)	11 W (DC) - 10 VA (AC)
Connector	AM 5110	AM 5111
Voltage	12 V DC - 24 V DC - 24 V AC - 110 V AC - 230 V AC	
Manual override	impulse screw - 2 positions	

3/2 Solenoid valve for vacuum with external pilot air supply

3/2 NC **G1/8**
AG-3001

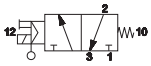

3/2 NO **G1/8**
AG-3002

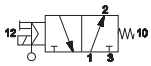

3/2 NC **G1/4 - G3/8**
AG-3009
AG-3011

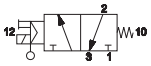

3/2 NO **G1/4 - G3/8**
AG-3010
AG-3012

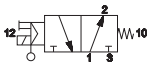

	Connect.	Control	Return	Ø	Resp. Time (ms)		Minimum control	Pump	Max vacuum		Weight	Coil	Part no.
		12	10	mm	En.	De-en.	pressure bar	max m³/h	mm Hg	Torr	Kg		
3/2 NC	G1/8	electric amplified	mechanical spring	5,5	14	25	1,5	1,5	759,5	0,5	0,25	U1	**AG-3001**
	G1/4			8	16	27	2,5	4	759,5	0,5	0,58	U2	**AG-3009**
	G3/8			10	16	27	2,5	10	759,5	0,5	0,56	U2	**AG-3011**
3/2 NO	G1/8	electric amplified	mechanical spring	5,5	14	25	1,5	1,5	759,5	0,5	0,25	U1	**AG-3002**
	G1/4			8	16	27	2,5	4	759,5	0,5	0,58	U2	**AG-3010**
	G3/8			10	16	27	2,5	10	759,5	0,5	0,56	U2	**AG-3012**

G1/8

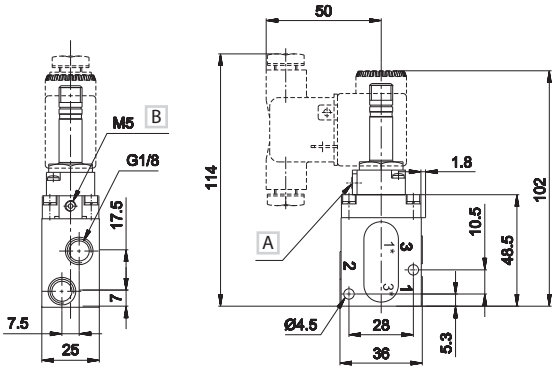

NC

1 = Supply port (vacuum)
2 = Use
3 = Exhaust

NO

1* = Supply port (vacuum)
2 = Use
3* = Exhaust

A Manual override
B Supply port for external servoassistance of the pilot

G1/4 - G3/8

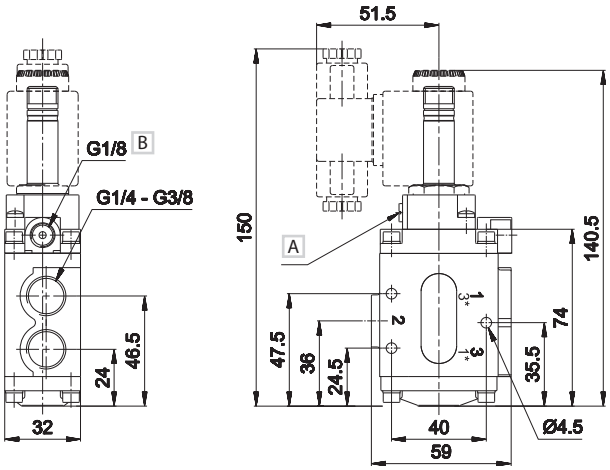

NC

1 = Suplly port (vacuum)
2 = Use
3 = Exhaust

NO

1* = Supply port (vacuum)
2 = Use
3* = Exhaust

A Manual override
B Supply port for external servoassistance of the pilot

Electrovalves are supplied without coil, connector and locking ring

3/2 Solenoid valve for vacuum with external pilot air supply

3/2 NC **G1/2 - G3/4 - G1**

AG-3020
AG-3040
AG-3050

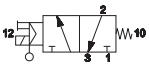

3/2 NO **G1/2 - G3/4 - G1**

AG-3021
AG-3041
AG-3051

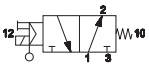

3/2 NC **G1 1/2**

AG-3062

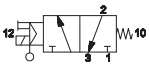

3/2 NO **G1 1/2**

AG-3063

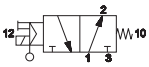

	Connect.	Control	Return	Ø	Resp. Time (ms)		Minimum control	Pump	Max vacuum		Weight	Coil	Part.no
		12	10	mm	En.	De-en.	pressure bar	max m³/h	mm Hg	Torr	Kg		
3/2 NC	G1/2	electric amplified	mechanical spring	15	16	40	3	20	759,5	0,5	1,19	U2	**AG-3020**
	G3/4			19	16	40	3	35	759,5	0,5	1,13	U2	**AG-3040**
	G1			25	18	42	3	90	759,5	0,5	1,62	U2	**AG-3050**
	G1 1/2			39	60	38	4	180	759,5	0,5	2,25	U2	**AG-3062**
3/2 NO	G1/2	electric amplified	mechanical spring	15	16	40	3	20	759,5	0,5	1,19	U2	**AG-3021**
	G3/4			19	16	40	3	35	759,5	0,5	1,13	U2	**AG-3041**
	G1			25	18	42	3	90	759,5	0,5	1,62	U2	**AG-3051**
	G1 1/2			39	60	38	4	180	759,5	0,5	2,25	U2	**AG-3063**

G1/2 - G3/4 - G1

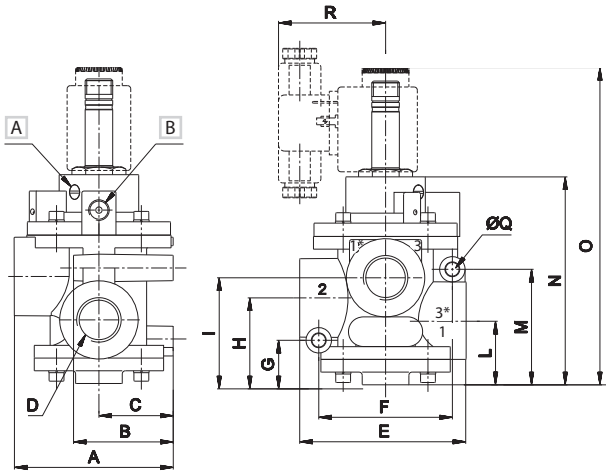

NC

1 = Supply port
2 = Use
3 = Exhaust

NO

1* = Supply port
2 = Use
3* = Exhaust

A Manual override
B Supply port for external servoassistance of the pilot

	A	B	C	D	E	F	G	H	I	L	M	N	O	Q	R
G1/2	75	47	35	G1/2	78,5	63	21	41	50,5	30	54,5	100	150	6,4	50,5
G3/4	75	47	35	G3/4	78,5	63	21	41	50,5	30	54,5	100	150	6,4	50,5
G1	89	55	40	G1	101	76	25,5	51	64	38	62,5	115	167	8,4	50

G1 1/2

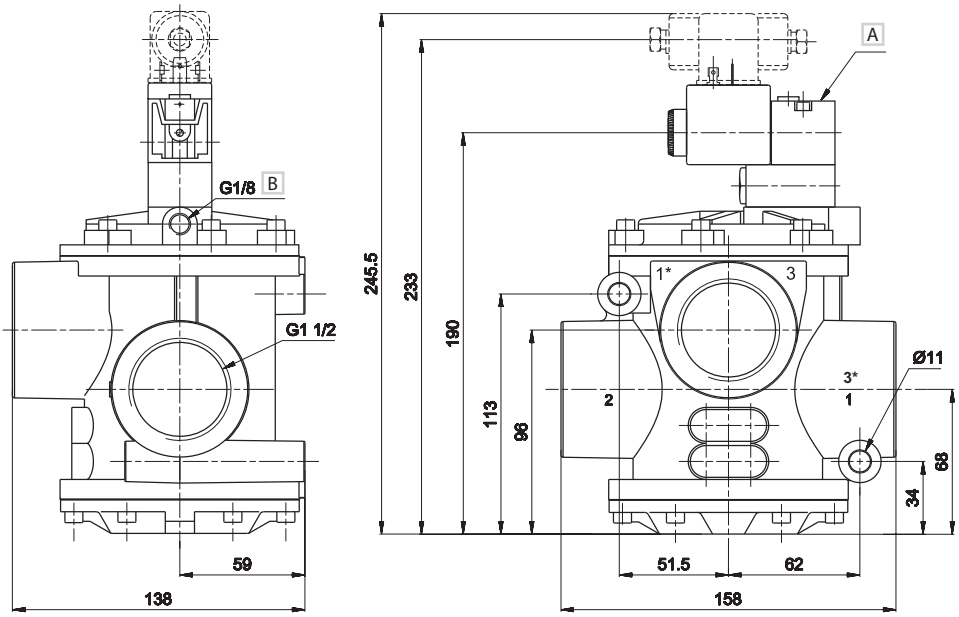

NC

1 = Supply port
2 = Use
3 = Exhaust

NO

1* = Supply port
2 = Use
3* = Exhaust

A Manual override
B Supply port for external servoassistance of the pilot

Electrovalves are supplied without coil, connector and locking ring

3/2 Pneumatic valve for vacuum with external air operation

3/2 NC **G1/8**

AG-3071

3/2 NO **G1/8**

AG-3072

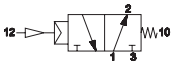

3/2 NC **G1/4 - G3/8**

AG-3073
AG-3075

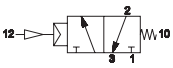

3/2 NO **G1/4 - G3/8**

AG-3074
AG-3076

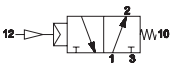

	Connect.	Control	Return	Ø	Resp. Time (ms)		Minimum control	Pump	Max vacuum		Weight	Part no.
		12	10	mm	En.	De-en.	pressure bar	max m³/h	mm Hg	Torr	Kg	
3/2 NC	G1/8	pneumatic amplified	mechanical spring	5,5	3	6	1,5	1,5	759,5	0,5	0,21	**AG-3071**
	G1/4			8	4	8	2,5	4	759,5	0,5	0,54	**AG-3073**
	G3/8			10	4	8	2,5	10	759,5	0,5	0,52	**AG-3075**
3/2 NO	G1/8	pneumatic amplified	mechanical spring	5,5	3	6	1,5	1,5	759,5	0,5	0,21	**AG-3072**
	G1/4			8	4	8	2,5	4	759,5	0,5	0,54	**AG-3074**
	G3/8			10	4	8	2,5	10	759,5	0,5	0,52	**AG-3076**

G1/8

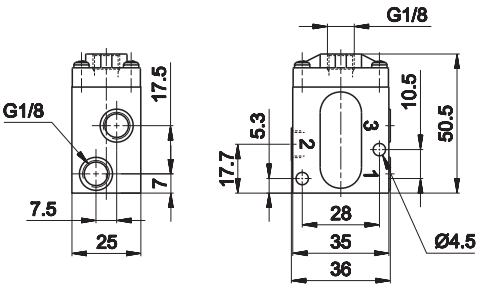

1 = Supply port (vacuum)
2 = Use
3 = Exhaust

G1/4 - G3/8

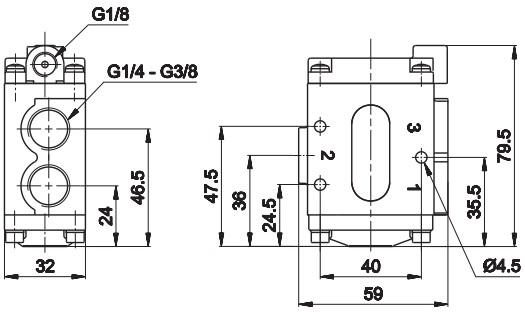

1 = Supply port (vacuum)
2 = Use
3 = Exhaust

3/2 Pneumatic valve for vacuum with external air operation

3/2 NC **G1/2 - G3/4 - G1**

AG-3081
AG-3091
AG-3100

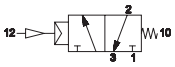

3/2 NO **G1/2 - G3/4 - G1**

AG-3082
AG-3092
AG-3101

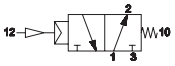

3/2 NC **G1 1/2**

AG-3110

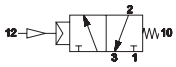

3/2 NO **G1 1/2**

AG-3111

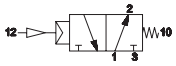

	Connect.	Control	Return	Ø	Times (ms)		Minimum control	Pump	Max vacuum		Weight	Part no.
		12	10	mm	En.	De-en.	pressure bar	max m³/h	mm Hg	Torr	Kg	
3/2 NC	G1/2	pneumatic amplified	mechanical spring	15	6	15	3	20	759,5	0,5	1,16	**AG-3081**
	G3/4			19	6	15	3	35	759,5	0,5	1,10	**AG-3091**
	G1			25	7	16	3	90	759,5	0,5	1,59	**AG-3100**
	G1 1/2			39	65	25	4	180	759,5	0,5	2,19	**AG-3110**
3/2 NO	G1/2	pneumatic amplified	mechanical spring	15	6	15	3	20	759,5	0,5	1,16	**AG-3082**
	G3/4			19	6	15	3	35	759,5	0,5	1,10	**AG-3092**
	G1			25	7	16	3	90	759,5	0,5	1,59	**AG-3101**
	G1 1/2			39	65	25	4	180	759,5	0,5	2,19	**AG-3111**

G1/2 - G3/4 - G1

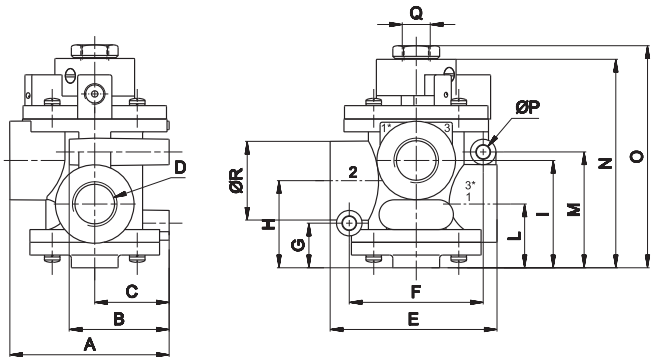

NC

1 = Supply port (vacuum)
2 = Use
3 = Exhaust

NO

1* = Supply port (vacuum)
2 = Use
3* = Exhaust

	A	B	C	D	E	F	G	H	I	L	M	N	O	P	Q	R
G1/2	75	47	35	G1/2	78,5	63	21	41	50,5	30	54,5	100	105	6,4	G1/4	37
G3/4	75	47	35	G3/4	78,5	63	21	41	50,5	30	54,5	100	105	6,4	G1/4	37
G1	88,5	55	40	G1	101	76	25,5	51	64	38	62,5	115	120,5	8,4	G1/4	45

G1 1/2

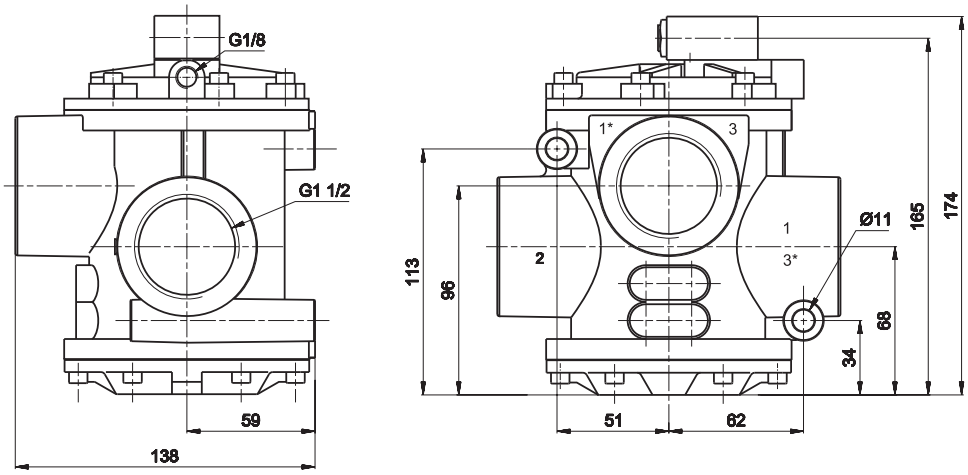

NC

1 = Supply port (vacuum)
2 = Use
3 = Exhaust

NO

1* = Supply port (vacuum)
2 = Use
3* = Exhaust

3/2 Solenoid valve for direct vacuum with pilot vacuum supply

3/2 NC **G1/4 - G3/8**

AG-3210
AG-3214

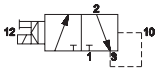

3/2 NO **G1/4 - G3/8**

AG-3211
AG-3215

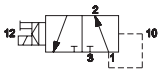

3/2 NC **G1/2 - G3/4 - G1**

AG-3222
AG-3232
AG-3242

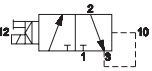

3/2 NO **G1/2 - G3/4 - G1**

AG-3223
AG-3233
AG-3243

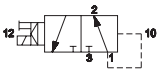

3/2 NC **G1 1/2**

AG-3256

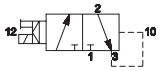

3/2 NO **G1 1/2**

AG-3257

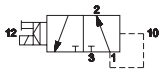

	Connect.	Control	Return	Ø	Resp. Time (ms)		Pump	Min. vacuum		Max vacuum		Weight	Coil	Part no.
		12	10	mm	En.	De-en.	max m³/h	mm Hg	Torr	mm Hg	Torr	Kg		
3/2 NC	G1/4			8	25	16	4	150	610	759,5	0,5	0,52	U2	**AG-3210**
	G3/8			10	25	16	10	150	610	759,5	0,5	0,56	U2	**AG-3214**
	G1/2	electric	vacuum	15	30	15	20	150	610	759,5	0,5	1,19	U2	**AG-3222**
	G3/4	amplified		19	30	15	35	150	610	759,5	0,5	1,13	U2	**AG-3232**
	G1			25	38	18	90	150	610	759,5	0,5	1,62	U2	**AG-3242**
	G1 1/2			39	75	50	100	150	610	759,5	0,5	2	U2	**AG-3256**
3/2 NO	G1/4			8	20	14	4	150	610	759,5	0,5	0,58	U2	**AG-3211**
	G3/8			10	20	14	10	150	610	759,5	0,5	0,56	U2	**AG-3215**
	G1/2	electric	vacuum	15	20	18	20	150	610	759,5	0,5	1,19	U2	**AG-3223**
	G3/4	amplified		19	20	18	35	150	610	759,5	0,5	1,13	U2	**AG-3233**
	G1			25	25	20	90	150	610	759,5	0,5	1,62	U2	**AG-3243**
	G1 1/2			39	70	60	100	150	610	759,5	0,5	2	U2	**AG-3257**

G1/4 - G3/8

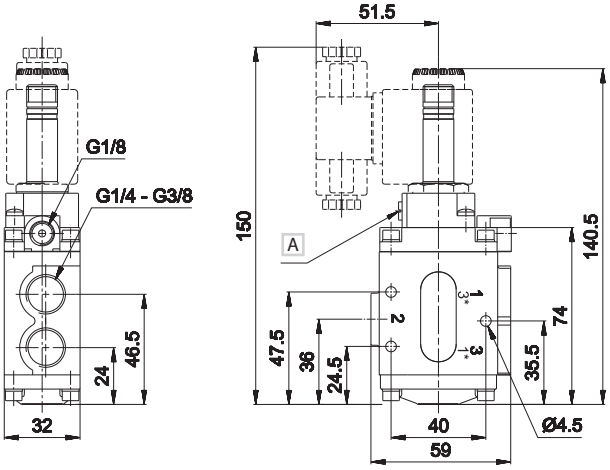

G1/2 - G3/4 - G1

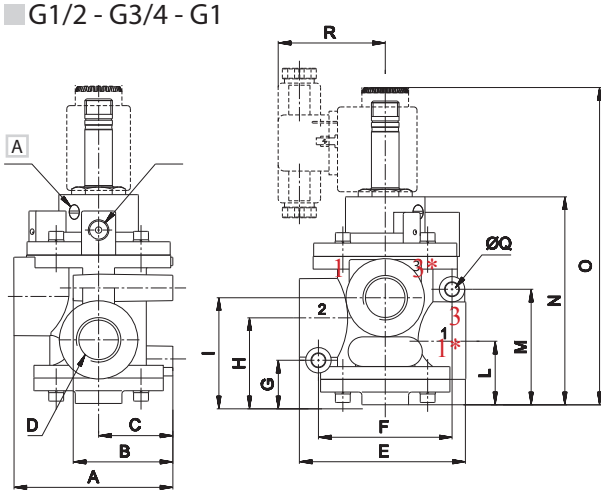

	A	B	C	D	E	F	G	H	I	L	M	N	O	Q	R
G1/2	75	47	35	G1/2	78,5	63	21	41	50,5	30	54,5	100	150	6,4	50,5
G3/4	75	47	35	G3/4	78,5	63	21	41	50,5	30	54,5	100	150	6,4	50,5
G1	89	55	40	G1	101	76	25,5	51	64	38	62,5	115	167	8,4	50

G1 1/2

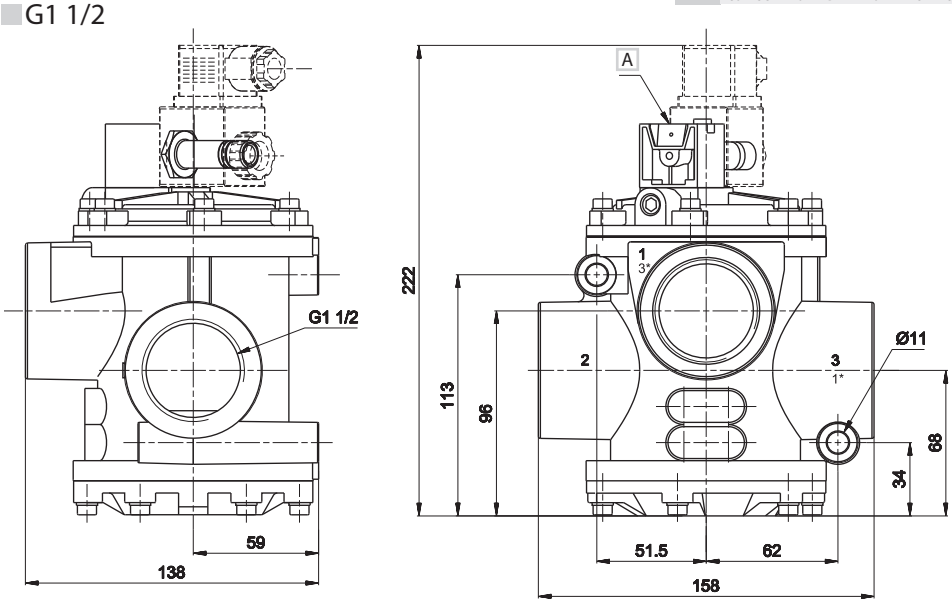

NC

1 = Supply port (vacuum)
2 = Use
3 = Exhaust

NO

1* = Supply port (vacuum)
2 = Use
3* = Exhaust

A Manual override

For 2/2 version put a cup on the exhaust (3)
Electrovalves are supplied without coil, connector and locking ring

Subject to change

2/2 - 3/2 Solenoid valve for vacuum with direct operation

3/2 NC **G1/4**

AG-3310
AG-3311
AG-3312
AG-3313

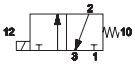

2/2 NC **G1/4**

AG-3300
AG-3301
AG-3302
AG-3303

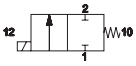

3/2 NC **G1/2**

AG-3330
AG-3331
AG-3332

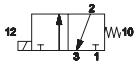

2/2 NC **G1/2**

AG-3320
AG-3321
AG-3322

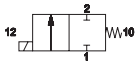

Material:

valve body	**G1/4** = brass
	G1/2 = alluminium
tube/sleeve	stainless steel
nucleus and spring	stainless steel
seals (a)	**G1/4** = NBR
	G1/2 = vulkollan

(a) = vulkollan + NBR for valves 3/2 version

	Connect.	Control	Return	Ø	Resp. Time (ms)		Pump	Max vacuum		Weight	Part no.
		12	10	mm	En.	De-en.	max m³/h	mm Hg	Torr	Kg	
3/2 NC	G1/4	electric	mechanical spring	3-3*	10	10	1,8	759,5	0,5	0,22	**AG-3310**
	G1/4			4-3*	12	8	2,5	759,5	0,5	0,22	**AG-3311**
	G1/4			5-3*	13	8	4	759,5	0,5	0,22	**AG-3312**
	G1/4			6-3*	15	8	5	759,5	0,5	0,22	**AG-3313**
	G1/2			8-3*	17	8	6	759,5	0,5	0,25	**AG-3330**
	G1/2			10-3*	20	10	7,5	759,5	0,5	0,25	**AG-3331**
	G1/2			11-3*	28	10	10	759,5	0,5	0,25	**AG-3332**
2/2 NC	G1/4	electric	mechanical spring	3	10	-	1,8	759,5	0,5	0,22	**AG-3300**
	G1/4			4	12	-	2,5	759,5	0,5	0,22	**AG-3301**
	G1/4			5	13	-	4	759,5	0,5	0,22	**AG-3302**
	G1/4			6	15	-	5	759,5	0,5	0,22	**AG-3303**
	G1/2			8	17	-	6	759,5	0,5	0,25	**AG-3320**
	G1/2			10	20	-	7,5	759,5	0,5	0,25	**AG-3321**
	G1/2			11	28	-	10	759,5	0,5	0,25	**AG-3322**

* = solenoid valves with 3 mm fixed exhaust

G1/4

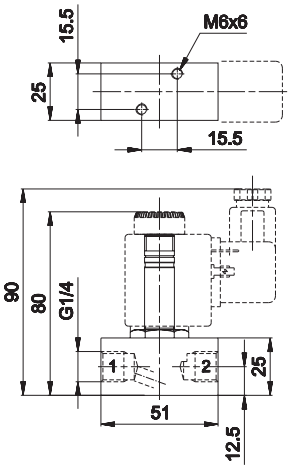

1 = Supply port (vacuum)
2 = Use
3 = Exhaust

G1/2

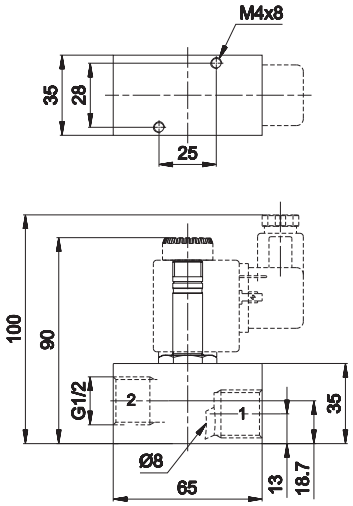

1 = Supply port (vacuum)
2 = Use
3 = Exhaust

Coil U2 - 17 VA	Voltage 24 V CA - 50/60 Hz 110 V CA - 50/60 Hz 220 V CA - 50/60 Hz	 **DB-0607** **DB-0608** **DB-0610**

Electrovalves are supplied without coil, connector and locking ring

AI

Miniature limit switches

Univer limit switches, mounted on sub-bases with threaded connections or with quick couplings, may be combined with different types of manual operators for panel mounting complying with the various need of the plant.

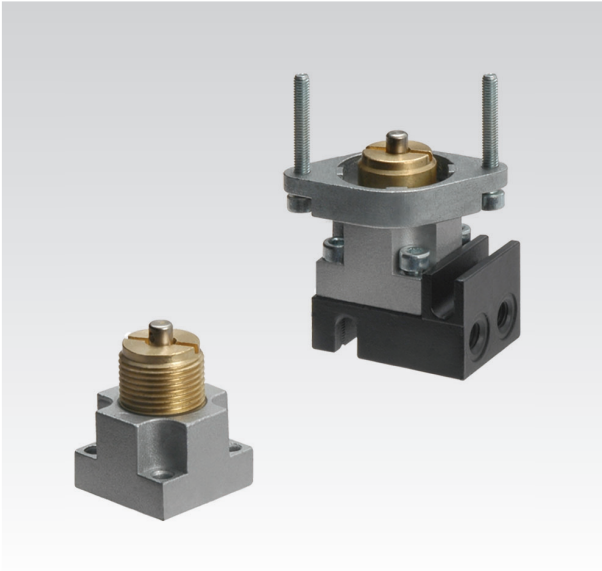

Available ATEX version upon request

CE Ex II 2Gc IIC T5 II 2Dc T100°C

TECHNICAL CHARACTERISTICS

Ambient temperature	-10 ÷ +90 °C
Fluid temperature	max +50 °C
Fluid	50 µm filtered air, with or without lubrication
Commutation system	poppet
Ways/Positions	**2/2 NC, 3/2 NC, 2/2 NO, 3/2 NO**
Pressure	max 10 bar
Control	manual, mechanical
Return	mechanical spring
Connections	interface for sub-base
Nominal Ø	2,3 mm (1,5 sensible type)
Nominal flow rate (Nl/min)	110 Nl/min (55 sensible type)

CONSTRUCTIVE CHARACTERISTICS

Valve body	zamak
Seals	nitrile rubber
Sub-base	zamak
Spool	nickel-plated brass

Flow rate characteristics

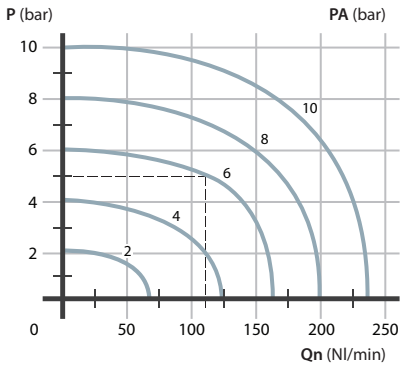

P = Working pressure
PA = Supply pressure
Qn = Flow rate

3
VALVES

Mechanical push button - spring

A Pre-stroke
B Max opening
C Total stroke
D 3/2 NC - 3/2 NO - 2/2 NC
E 2/2 NO

	Symbol	Ø mm	Flow rate Nl/min	Force N	Weight Kg	Part no.
3/2 NC	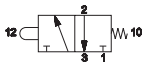	2,3 1,5	110 55	15 4	0,040 0,040	**AI-3500** **AI-3500S (a)**
3/2 NO	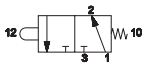	2,3 1,3	110 45	15 4	0,040 0,040	**AI-3501** **AI-3501S(a)**
2/2 NC	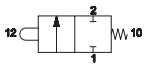	2,3	110	15	0,040	**AI-3502**
2/2 NO (b)	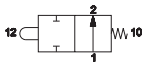	2,3	110	15	0,040	**AI-3503**

(a) = sensible (b) = 2/2 NO version available upon request

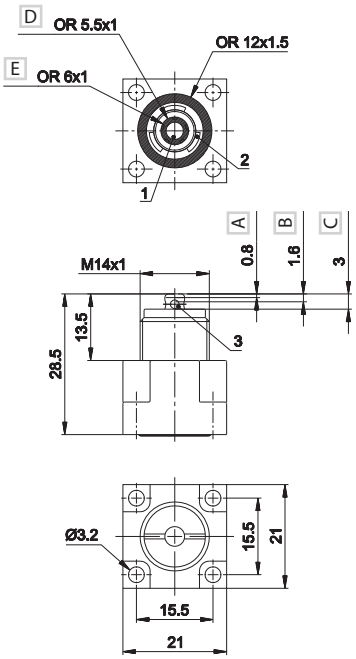

1 = Supply port
2 = Use
3 = Exhaust

PNEUMATIC AND MECHANICAL ACTUATORS

	Pneumatic operator	AI-3550
	Amplified pneumatic operator	AI-3551
	Roller operator 1 position	AI-3560
	Ball-push operator 1 position	AI-3562
	Operator with omni-directional antenna 1 position	AI-3563
	Roller lever operator 1 posizione	AI-3570
	Articulated roller operator 1 position Complete actuation with stroke 2,5 mm, max stroke 4,7 mm	AI-3571
	Key operator 1 position	AI-3572

MANUAL PUSH

	Recessed button	BLACK RED GREEN	AI-3511 AI-3512 AI-3513
	Head button	RED BLACK RED BLACK	AI-3514 AI-3516 AI-3514D AI-3516D
	Button	GREEN RED BLACK	AI-3515 AI-3517 AI-3519
	Accident prevention rotating selector	BLACK BLACK	AI-3520 AI-3521
	Rotating lever selector	BLACK BLACK	AI-3522 AI-3523
	Lever operator	BLACK	AI-3524
	Omni-directional operator	BLACK	AI-3525
	Push-pull operator	BLACK	AI-3526

For actuators dimensions see section **"Accessories>Actuators"**

Mechanical push button for panel mounting - spring

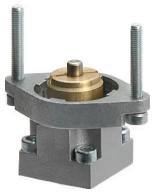

A 3/2 NC - 3/2 NO - 2/2 NC
B 2/2 NO

	Symbol	Ø mm	Flow rate Nl/min	Force N	Weight Kg	Part no.
3/2 NC	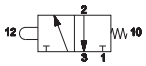	2,3 1,5	110 55	15 4	0,055 0,055	**AI-3500Q** **AI-3500SQ (a)**
3/2 NO	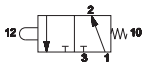	2,3 1,3	110 45	15 4	0,055 0,055	**AI-3501Q** **AI-3501SQ (a)**
2/2 NC	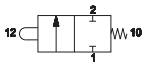	2,3	110	15	0,055	**AI-3502Q**
2/2 NO (b)	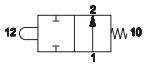	2,3	110	15	0,055	**AI-3503Q**

(a) = sensible (b) = upon request only 2/2 NO version

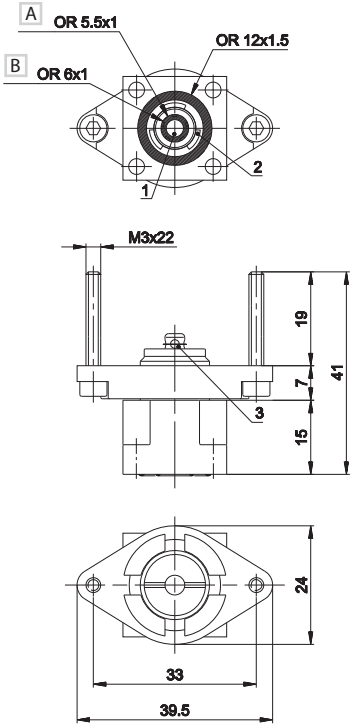

1 = Supply port
2 = Use
3 = Exhaust

MANUAL PUSH

	Recessed button	■BLACK ■RED ■GREEN	AI-3511Q AI-3512Q AI-3513Q
	Head button	■RED ■BLACK ■RED ■BLACK	AI-3514Q AI-3516Q AI-3514QD AI-3516QD
	Button	■GREEN ■RED ■BLACK	AI-3515Q AI-3517Q AI-3519Q
	Accident prevention rotating selector	■BLACK ■BLACK	AI-3520Q AI-3521Q
	Rotating lever selector	■BLACK ■BLACK	AI-3522Q AI-3523Q
	Lever operator	■BLACK	AI-3524Q
	Omni-directional operator	■BLACK	AI-3525Q
	Push-pull operator	■BLACK	AI-3526Q

For actuators dimensions see section **"Accessories>Actuators"**

AI-3610	AI-3610 + AI-3500	AI-3610 + AI-3500Q

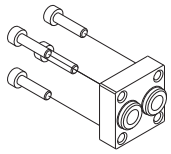

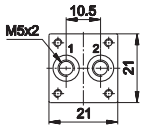

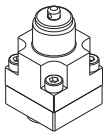

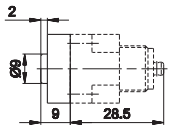

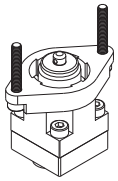

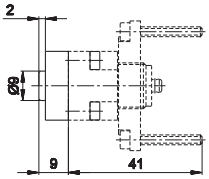

Sub-base with M5 threaded connections
weight: 0,020 Kg

AI-3612	AI-3612 + AI-3500	AI-3612 + AI-3500Q

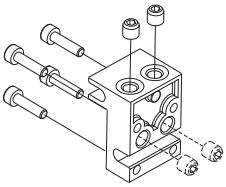

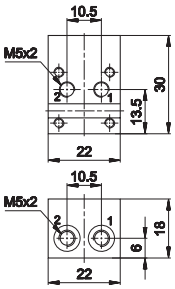

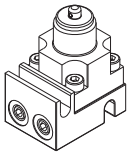

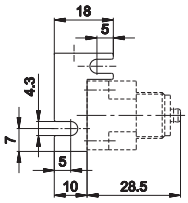

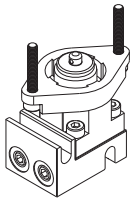

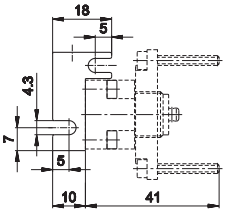

Sub-base with side or dorsal consumotions and threaded connections M5
weight: 0,020 Kg

Part numbers include M3x12 fixing screws (4 pcs) and M5x5 dowel pins to close the unused ways.
The M5x5 dowel pins must be mounted with loctite (243 type). Be sure that loctite does not obstruct the ports or sinks inside the valve.
The dowel pins must be screwed till reaching the base surface. Avoid screwing them completely.

3

AI JET

JET series Pneumatic Switches

- Light with compact design
- Low operating force and high response time
- M5 threaded connections or push-in fitting tube Ø4
- Wide range of actuators and manual overrides for mounting panel (Original Univer)

Available ATEX version upon request

CE Ex II 2Gc IIC T5 II 2Dc T100°C

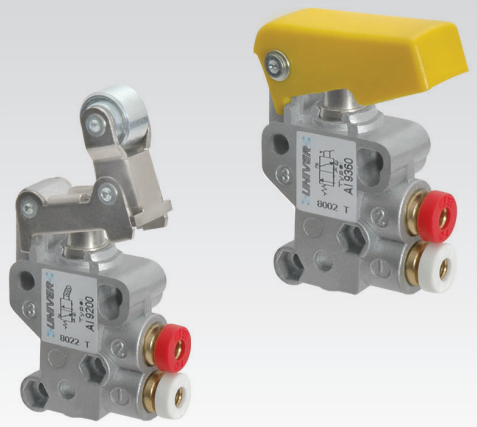

TECHNICAL CHARACTERISTICS

Ambient temperature	-10 ÷ +90 °C
Fluid temperature	max +50 °C
Fluid	50 µm filtered air, with or without lubrication
Commutation system	poppet
Ways/Positions	**2/2 NC, 3/2 NC, 3/2 NO**
Pressure	max 10 bar
Control	manual, mechanical
Return	mechanical spring
Connections	M5, tube Ø4
Nominal Ø	2,5 mm
Nominal flow rate (Nl/min)	70 Nl/min

CONSTRUCTIVE CHARACTERISTICS

Valve body	zamak
Seals	nitrile rubber
Spool	nickel-plated brass

OTHER VERSIONS AVAILABLE

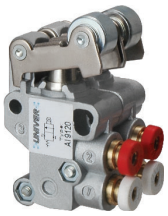

Flow rate characteristics

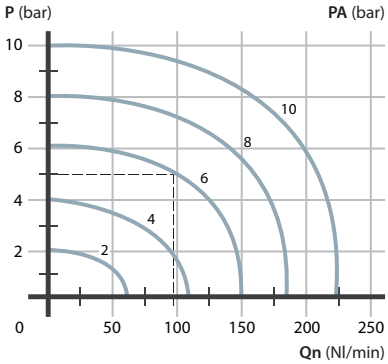

P = Working pressure
PA = Supply pressure
Qn = Flow rate

3 VALVES

Ball-push - spring **tube Ø4**

	Symbol	Connection	Force (a) N	Weight Kg	Part no.
3/2 NC	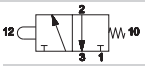	tube Ø4	14	0,060	**AI-9000**
3/2 NO	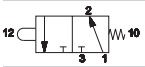	tube Ø4	14	0,060	**AI-9010**
2/2 NC	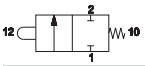	tube Ø4	14	0,060	**AI-9020**

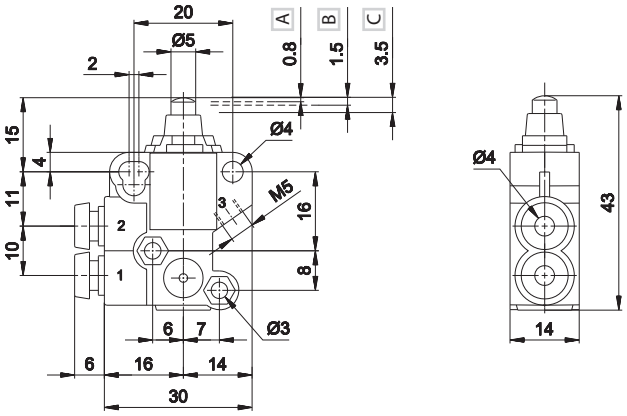

A Pre-stroke
B Maximum opening
C Total stroke

1 = Supply port
2 = Use
3 = Exhaust

Ball-push - spring **M5**

	Symbol	Connection	Force (a) N	Weight Kg	Part no.
3/2 NC	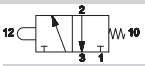	M5	14	0,060	**AI-9000M**
3/2 NO	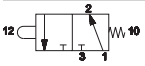	M5	14	0,060	**AI-9010M**
2/2 NC	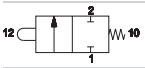	M5	14	0,060	**AI-9020M**

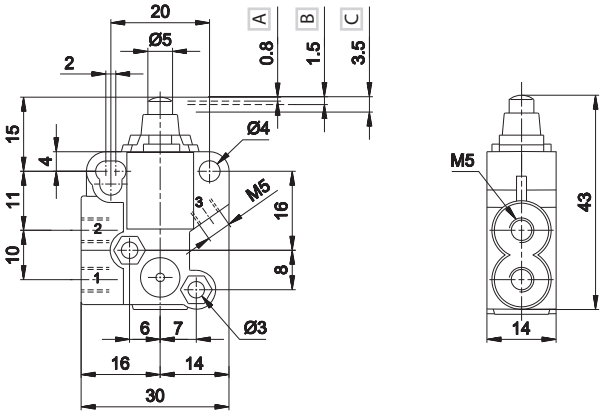

A Pre-stroke
B Maximum opening
C Total stroke

1 = Supply port
2 = Use
3 = Exhaust

Roller lever - spring **tube Ø4**

	Symbol	Connection	Force (a) N	Weight Kg	Part no.
3/2 NC	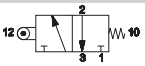	tube Ø4	7	0,085	**AI-9100**
3/2 NO	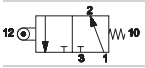	tube Ø4	7	0,085	**AI-9110**
2/2 NC	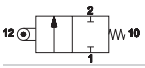	tube Ø4	7	0,085	**AI-9120**

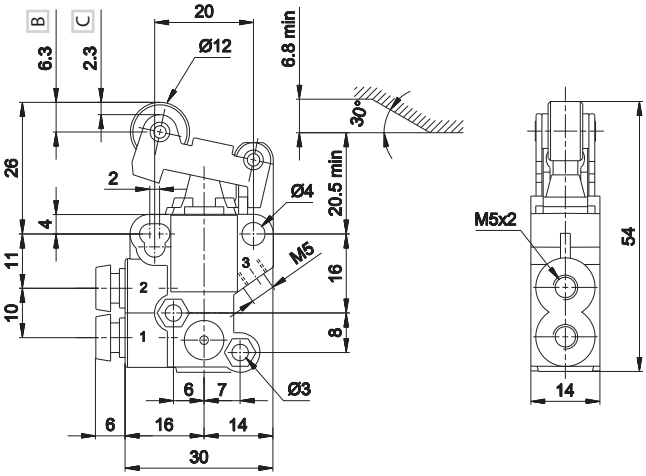

B Maximum opening
C Total stroke

1 = Supply port
2 = Use
3 = Exhaust

(a) = at 6 bar (b) = upon request 2/2 NO version

Roller lever - spring **M5**

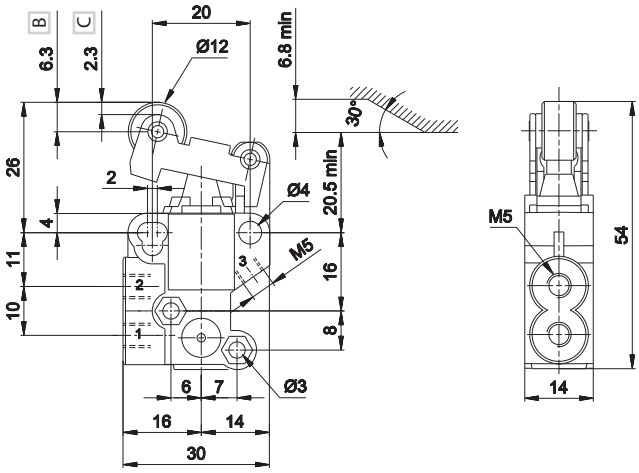

	Symbol	Connection	Force (a) N	Weight Kg	Part no.
3/2 NC	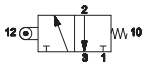	M5	7	0,085	**AI-9100M**
3/2 NO	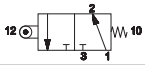	M5	7	0,085	**AI-9110M**
2/2 NC	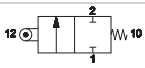	M5	7	0,085	**AI-9120M**

B Maximum opening
C Total stroke

1 = Supply port
2 = Use
3 = Exhaust

Uni-directional roller lever - spring **tube Ø4**

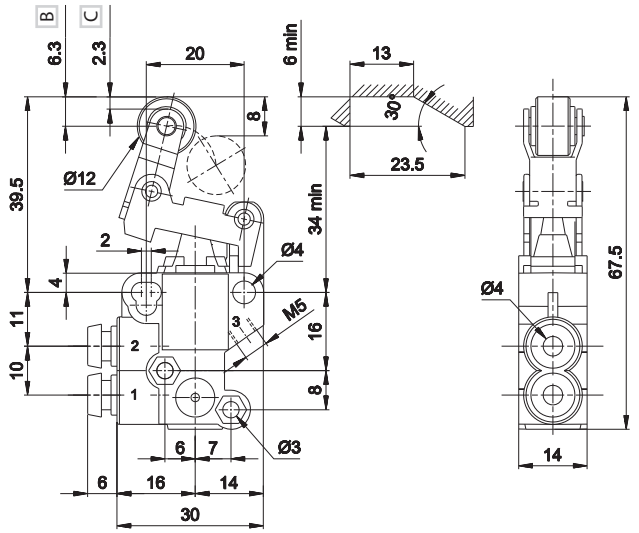

	Symbol	Connection	Force (a) N	Weight Kg	Part no.
3/2 NC	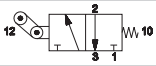	tube Ø4	4	0,085	**AI-9200**
3/2 NO	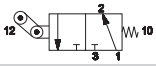	tube Ø4	4	0,085	**AI-9210**
2/2 NC	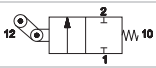	tube Ø4	4	0,085	**AI-9220**

B Maximum opening
C Total stroke

1 = Supply port
2 = Use
3 = Exhaust

Uni-directional roller lever - spring **M5**

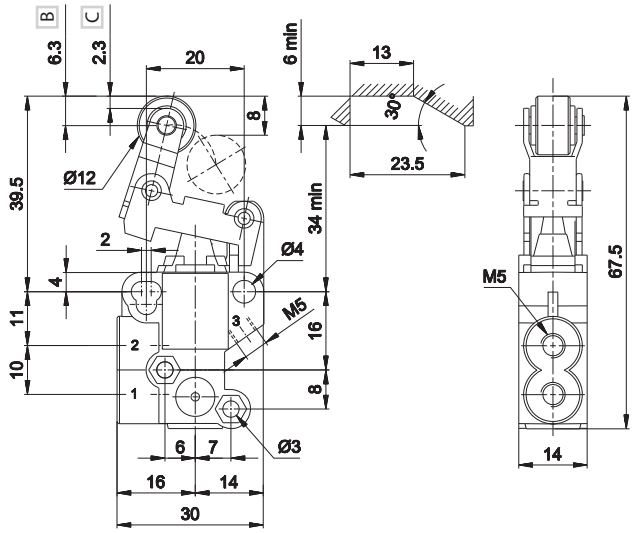

	Symbol	Connection	Force (a) N	Weight Kg	Part no.
3/2 NC	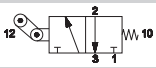	M5	4	0,085	**AI-9200M**
3/2 NO	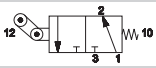	M5	4	0,085	**AI-9210M**
2/2 NC	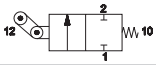	M5	4	0,085	**AI-9220M**

B Maximum opening
C Total stroke

1 = Supply port
2 = Use
3 = Exhaust

(a) = at 6 bar (b) = upon request 2/2 NO version

Mechanical push button with screw mounting - spring **tube Ø4**

	Symbol	Connection	Force (a) N	Weight Kg	Part no.
3/2 NC	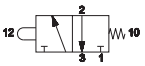	tube Ø4	14	0,082	**AI-9300**
3/2 NO	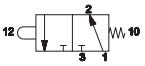	tube Ø4	14	0,082	**AI-9310**
2/2 NC	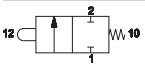	tube Ø4	14	0,082	**AI-9320**

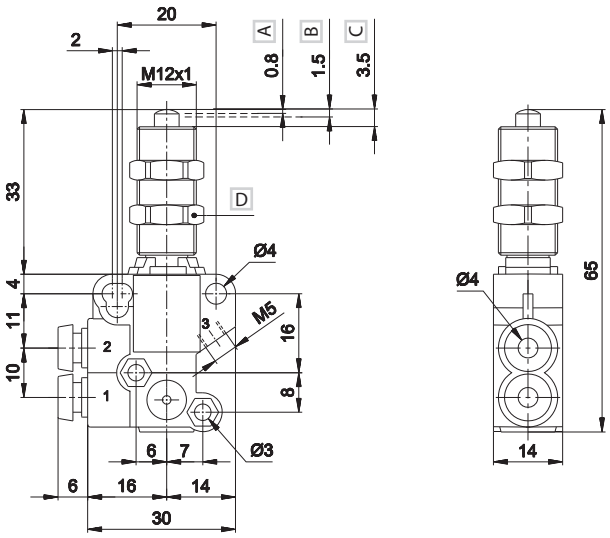

A Pre-stroke
B Maximum opening
C Total stroke
D Wrench 14

1 = Supply port
2 = Use
3 = Exhaust

Mechanical push button with screw mounting - spring **M5**

	Symbol	Connection	Force (a) N	Weight Kg	Part no.
3/2 NC	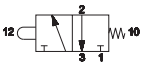	M5	14	0,082	**AI-9300M**
3/2 NO	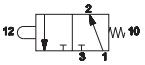	M5	14	0,082	**AI-9310M**
2/2 NC	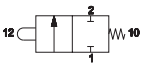	M5	14	0,082	**AI-9320M**

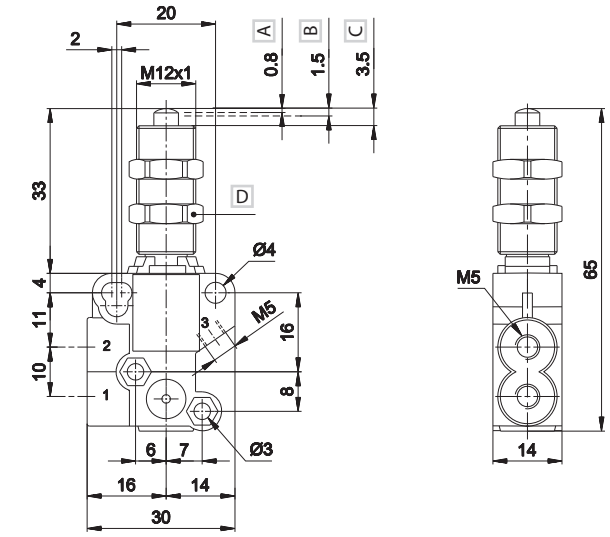

A Pre-stroke
B Maximum opening
C Total stroke
D Wrench 14

1 = Supply port
2 = Use
3 = Exhaust

(a) = at 6 bar (b) = upon request 2/2 NO version

Button - spring **tube Ø4**

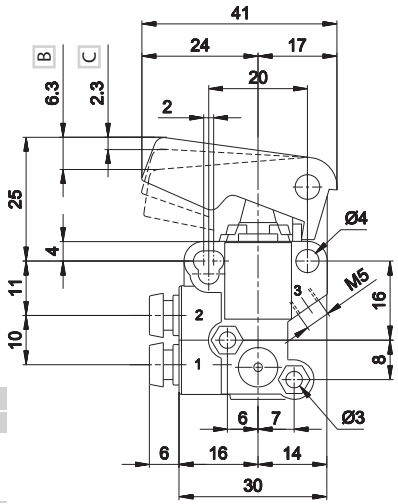

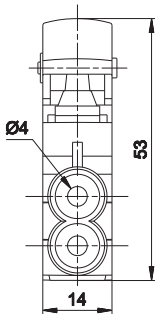

	Symbol	Connection	Force (a) N	Weight Kg	Part no.
3/2 NC	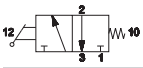	tube Ø4	7	0,065	**AI-9350**
3/2 NO	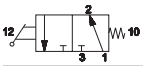	tube Ø4	7	0,065	**AI-9360**
2/2 NC	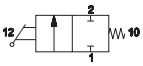	tube Ø4	7	0,065	**AI-9370**

B Maximum opening
C Total stroke

1 = Supply port
2 = Use
3 = Exhaust

Button yellow colour

Button - spring **M5**

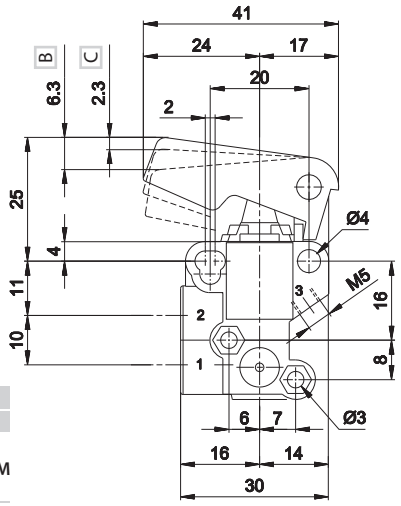

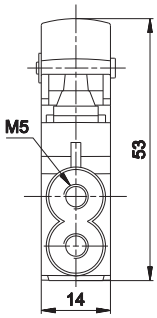

	Symbol	Connection	Force (a) N	Weight Kg	Part no.
3/2 NC	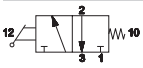	M5	7	0,065	**AI-9350M**
3/2 NO	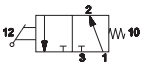	M5	7	0,065	**AI-9360M**
2/2 NC	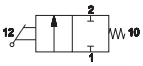	M5	7	0,065	**AI-9370M**

B Maximum opening
C Total stroke

1 = Supply port
2 = Use
3 = Exhaust

Button yellow colour

(a) = at 6 bar (b) = upon request 2/2 NO version

Mechanical push button for panel mounting - spring **tube Ø4**

	Symbol	Connection	Force (a) N	Weight Kg	Part no.
3/2 NC	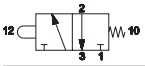	tube Ø4	14	0,075	**AI-9400**
3/2 NO	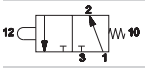	tube Ø4	14	0,075	**AI-9410**
2/2 NC	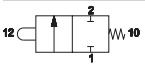	tube Ø4	14	0,075	**AI-9420**

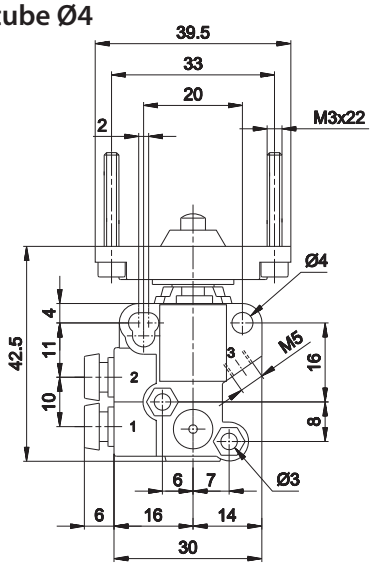

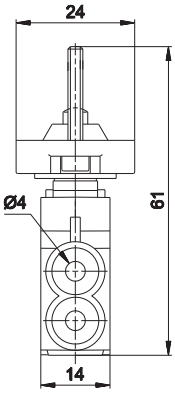

1 = Supply port
2 = Use
3 = Exhaust

Mechanical push button for panel mounting - spring **M5**

	Symbol	Connection	Force (a) N	Weight Kg	Part no.
3/2 NC	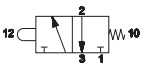	M5	14	0,075	**AI-9400M**
3/2 NO	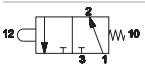	M5	14	0,075	**AI-9410M**
2/2 NC	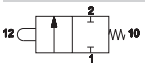	M5	14	0,075	**AI-9420M**

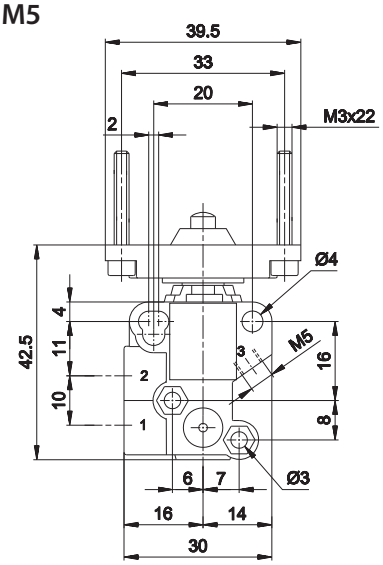

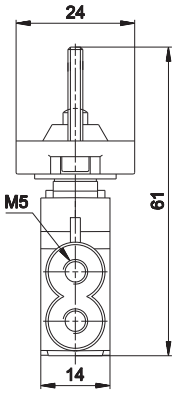

1 = Supply port
2 = Use
3 = Exhaust

MANUAL ACTUATORS

	Recessed button	■BLACK AI-3511Q ■RED AI-3512Q ■GREEN AI-3513Q		Rotating lever selector	■BLACK AI-3522Q ■BLACK AI-3523Q
	Head button	■RED AI-3514Q ■BLACK AI-3516Q ■RED AI-3514QD ■BLACK AI-3516QD		Lever operator	■BLACK AI-3524Q
	Button	■GREEN AI-3515Q ■RED AI-3517Q ■BLACK AI-3519Q		Omni-directional operator	■BLACK AI-3525Q
	Rotating selector	■BLACK AI-3520Q ■BLACK AI-3521Q		Push-pull operator	■BLACK AI-3526Q

(a) = at 6 bar (b) = upon request 2/2 NO version
For actuator dimensions refer to section **"Accessories>Actuators"**

AI JET2

3/2 - 5/2 - 5/3 Valves with panel operation

- Light with compact design
- Low operating force and high response time
- M5 threaded connections or push-in fitting tube Ø4
- Wide range of actuators and manual overrides for mounting panel (Original Univer)

Available ATEX version upon request

CE Ex II 2Gc IIC T5 II 2Dc T100°C

TECHNICAL CHARACTERISTICS

Ambient temperature	-10 ÷ +90 °C
Fluid temperature	max +50 °C
Fluid	50 µm filtered air, with or without lubrication
Commutation system	poppet
Ways/Positions	**2/2 NC, 3/2 NC, 3/2 NO**
Pressure	max 10 bar
Control	manual, mechanical
Return	mechanical spring
Connections	M5, tube Ø4
Nominal Ø	2,5 mm
Nominal flow rate (Nl/min)	70 Nl/min

CONSTRUCTIVE CHARACTERISTICS

Valve body	zamak
Seals	nitrile rubber
Spool	nickel-plated brass

Flow rate characteristics

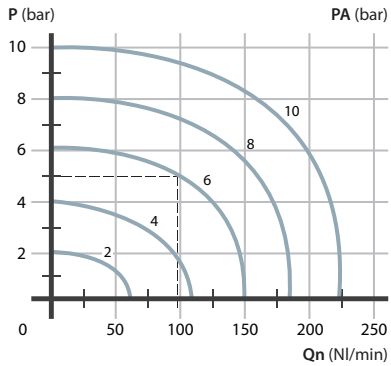

P = Working pressure
PA = Supply pressure
Qn = Flow rate

3
VALVES

2/2 - 3/2 Mechanical push button for panel mounting - **tube Ø4**

	Symbol	Connection	Weight Kg	Part no.
3/2 NC	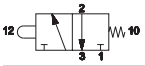	tube Ø4	0,075	**AI-9500B**
3/2 NO	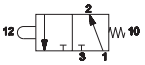	tube Ø4	0,075	**AI-9510B**
2/2 NC	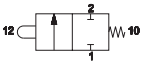	tube Ø4	0,075	**AI-9520B**

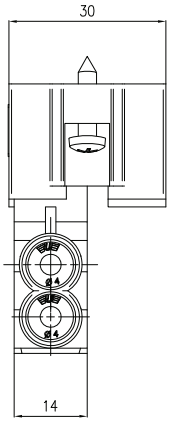

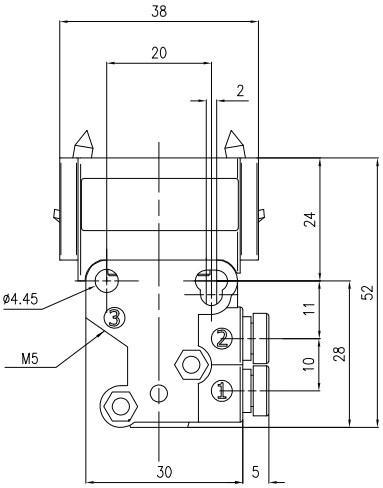

5/2 - 5/3 Mechanical push button for panel mounting - **tube Ø4**

	Symbol	Connection	Weight Kg	Part no.
5/2	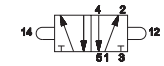	tube Ø4	0,15	**AI-9550B**
5/3 o.c.	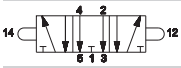	tube Ø4	0,15	**AI-9560B**
5/3 p.c.	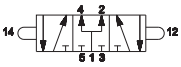	tube Ø4	0,15	**AI-9570B**

o.c. = open centres **p.c.** = pressurized centres

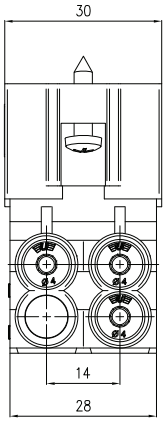

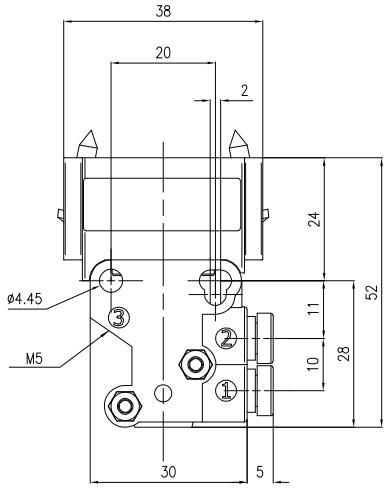

2/2 - 3/2 Mechanical push button for panel mounting - **M5**

	Symbol	Connection	Weight Kg	Part no.
3/2 NC	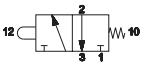	M5	0,075	**AI-9500BM**
3/2 NO	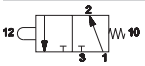	M5	0,075	**AI-9510BM**
2/2 NC	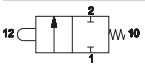	M5	0,075	**AI-9520BM**

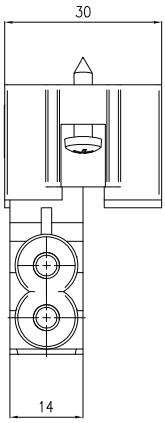

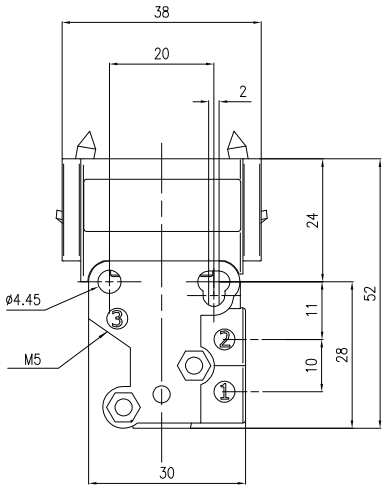

5/2 - 5/3 Mechanical push button for panel mounting - **M5**

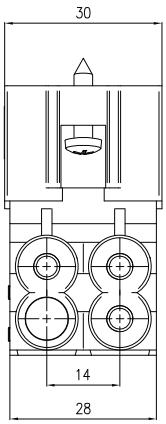

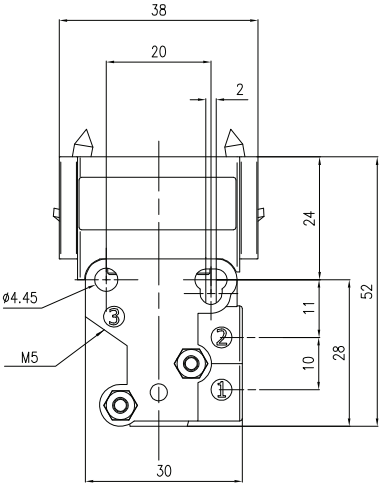

	Symbol	Connection	Weight Kg	Part no.
5/2	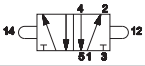	M5	0,15	**AI-9550BM**
5/3 o.c.	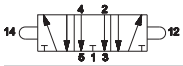	M5	0,15	**AI-9560BM**
5/3 p.c.	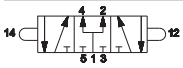	M5	0,15	**AI-9570BM**

o.c. = open centres **p.c.** = pressurized centres

MANUAL ACTUATORS

	Recessed button	■BLACK ■RED ■GREEN	AI-35B10N AI-35B10R AI-35B10V
	Protruding button	■BLACK ■RED ■GREEN	AI-35B11N AI-35B11R AI-35B11V
	Two-position head button	■BLACK ■RED	AI-35B13N AI-35B13R
	Short lever selector	■BLACK ■BLACK ■BLACK	AI-35B20 2 steady positions AI-35B21 3 unsteady positions AI-35B22 3 steady positions
	Long lever selector	■BLACK ■BLACK ■BLACK	AI-35B25 2 steady positions AI-35B26 3 unsteady positions AI-35B27 3 steady positions
	Key selector	■BLACK ■BLACK ■BLACK	AI-35B30 2 steady positions AI-35B31 3 unsteady positions AI-35B32 3 steady positions

For actuator dimensions refer to section **"Accessories>Actuators"**

AM

Pneumatic and electric foot valves

- Double poppet system appreciated for its reliability and high flow rate
- Aluminium valve body and pedal lever assuring the max strenght
- Available with and without protection (in the latter case the protection is to be realized by the machine builder according to the current rules)
- Available with safety devices to prevent unintentional operations
- Available with pneumatic servo-assitance in case of minimum stress
- Electric foot valves with single or double microswitch complete the foot valve range

Available ATEX version upon request

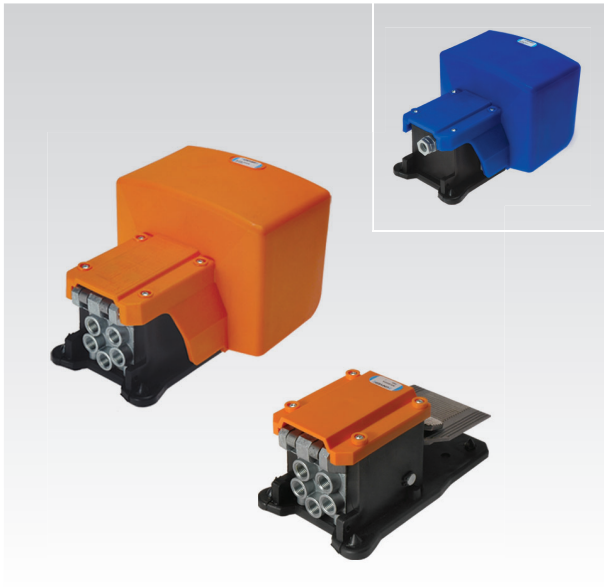

TECHNICAL CHARACTERISTICS

Ambient temperature	-10 ÷ +70 °C	
Fluid temperature	-10 ÷ +50 °C	
Fluid	filtered air 50 µm, with or without lubrication	
Commutation system	poppet	
Ways/Positions	**2/2 NC, 3/2 NC, 2/2 NO, 3/2 NO, 5/2**	
Pressure	max 10 bar	
Control	pedal	
Return	mechanical spring, pedal	
Connections	**G1/8**	**G1/4**
Nominal Ø (mm)	2,3	8
Nominal flow rate (Nl/min)	98	800

CONSTRUCTIVE CHARACTERISTICS

PNEUMATIC FOOT VALVE:	
Valve body	zamak
Foot valve lever	aluminium
Pedal body and protections	plastic material with reinforcing steel plate
Seals	oil/wear-resistant compound
Spool	aluminium
ELECTRIC FOOT VALVE:	
Valve body, foot valve lever, protections	dielectric plastic material

Functioning

Pedal with spring return

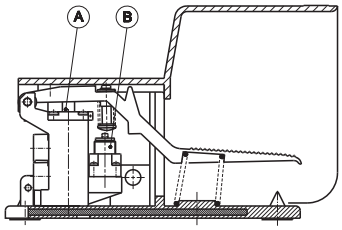

Direct operation **A** or pneumatic servo-assistance **B.**

Pedal with two positions (bistable)

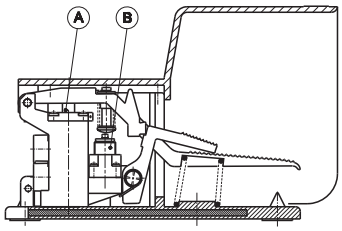

The pedal must be deeply pressed. The unlocking pedal brings the pedal back to the starting position.

Pedal with safety device

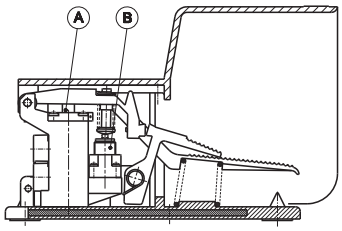

Operation in possible only by pushing both pedals at the same time. Pedals return to the starting position by releasing them. In this case unintentional operation is avoided.

G1/4 pneumatic foot valve with protection

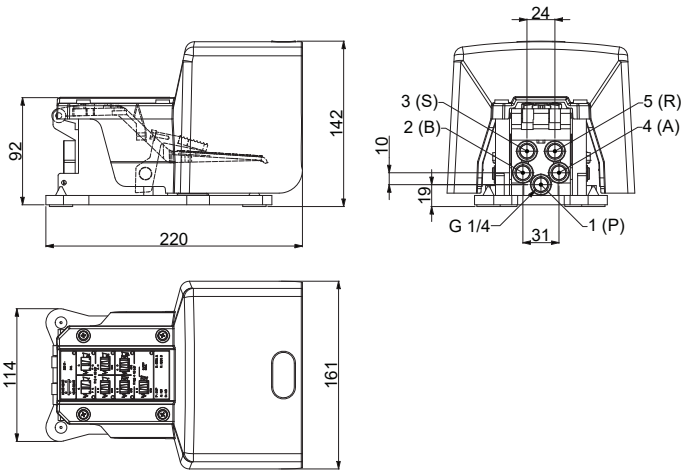

	Symbol	Return	Force N	Weight Kg	Part no.
	SPRING RETURN PEDAL				
3/2 NC		mechanical spring	20	1,25	**AM-5000**
5/2		mechanical spring	20	1,45	**AM-5001**
3/2 NO		mechanical spring	20	1,25	**AM-5002**
	BISTABLE PEDAL				
3/2 NC		pedal	20	1,37	**AM-5003**
5/2		pedal	20	1,52	**AM-5004**
3/2 NO		pedal	20	1,37	**AM-5005**
	PEDAL WITH SAFETY CONTROL				
5/2		mechanical spring	20	1,45	**AM-5011**
3/2 NO		mechanical spring	20	1,25	**AM-5012**
3/2 NC		mechanical spring	20	1,25	**AM-5015**
	SERVOASSISTED PEDAL - SPRING RETURN				
5/2		mechanical spring	20	1,45	**AM-5021**
	SERVOASSISTED BISTABLE PEDAL				
5/2		mechanical spring	20	1,45	**AM-5031**
	SERVOASSISTED PEDAL WITH SAFETY CONTROL				
5/2		mechanical spring	20	1,45	**AM-5041**

Pneumatic foot valve with orange standard protection.

1 (P) = Supply port
2 - 4 (B - A) = Use
3 - 5 (S- R) = Exhaust

Threaded connections for different functions

2/2 NC		2/2 NO		3/2 NC			3/2 NO			5/2				
A	P	B	P	A	P	R	B	P	S	A	B	P	R	S
4	1	2	1	4	1	5	2	1	3	4	2	1	5	3

G1/4 pneumatic foot valves without protection

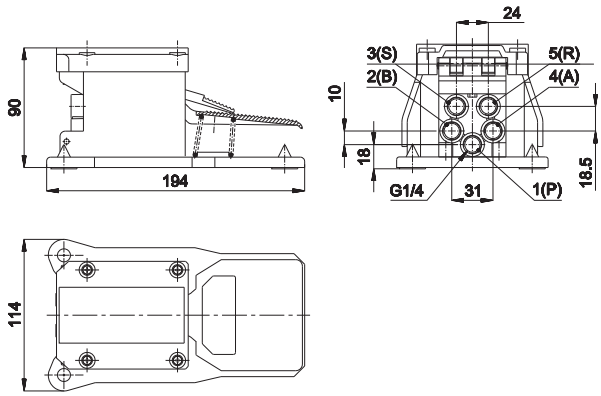

	Symbol	Return	Force N	Weight Kg	Part no.
	PEDAL				
3/2 NC		mechanical spring	20	1,25	**AM-5000A**
5/2		mechanical spring	20	1,45	**AM-5001A**
	BISTABLE PEDAL				
3/2 NC		pedal	20	1,37	**AM-5003A**
5/2		pedal	20	1,52	**AM-5004A**

Other versions upon request.
If this version is used the protection is to be realized by the user according to the current rules.

1 (P) = Supply port
2 - 4 (B - A) = Use
3 - 5 (S- R) = Exhaust

Threaded connections for different functions

2/2 NC		2/2 NO		3/2 NC			3/2 NO			5/2				
A	P	B	P	A	P	R	B	P	S	A	B	P	R	S
4	1	2	1	4	1	5	2	1	3	4	2	1	5	3

G1/8 pneumatic foot valves with protection

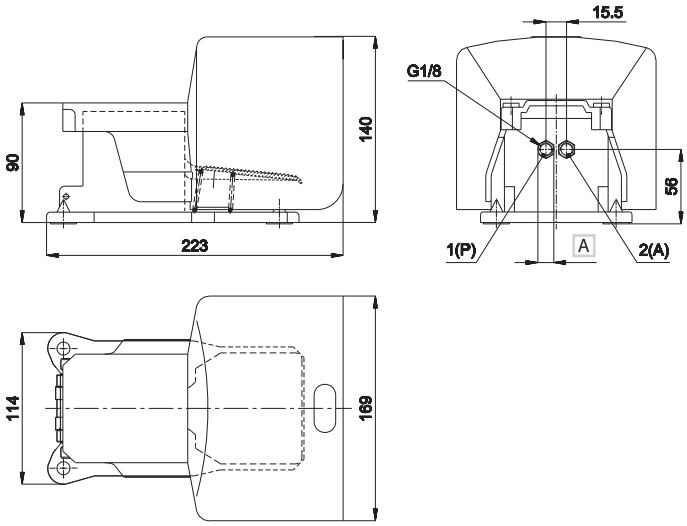

	Symbol	Return	Force N	Weight Kg	Part no.
3/2 NC	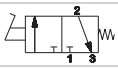	mechanical spring	20	0,96	**AM-5043**
2/2 NC	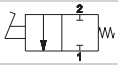	mechanical spring	20	0,96	**AM-5043B**
3/2 NO	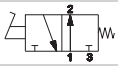	mechanical spring	20	0,96	**AM-5043C**
2/2 NO	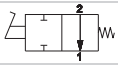	mechanical spring	20	0,96	**AM-5043D**

Pneumatic foot valve with orange protection.
Version without protection upn request.

A Wrench 12

1 (P) = Supply port
2 (A) = Use

Electric foot valves

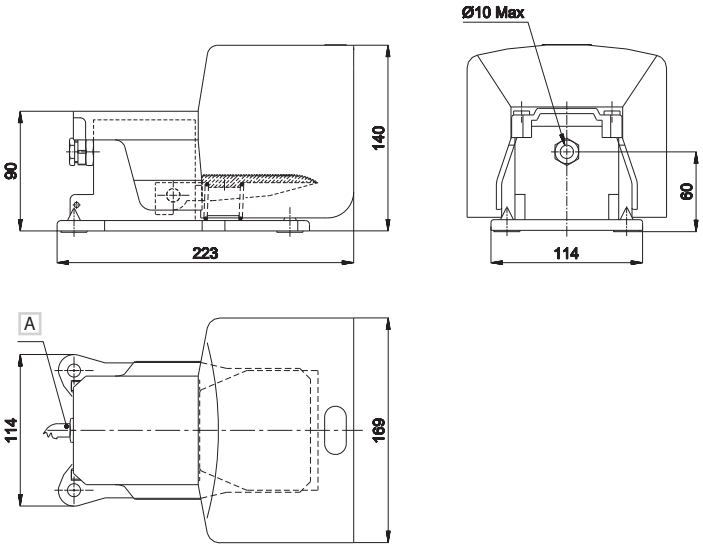

Symbol	Description	Force N	Weight Kg	Part no.
	pedal without electric microswitch	20	0,86	**AM-5050**
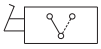	pedal with electric microswitch	20	0,92	**AM-5051**
	pedal with double electric microswitch	20	0,95	**AM-5052**

Electric foot valve with blue protection.

A Electric cable

3
VALVES

P10

10 mm COMPACT valves - threaded body and for sub-base mounting
90° ELECTROPILOT CONNECTION

- Standard consumption: 1 W; upon request low power consumption: 0,3W
- Quick response times
- High flow rate: the development of the traditional UNIVER spool technology permits high flow rate values
- Compact design: the valve body (10mm) allows reduced overall dimensions
- Complete solution
- Threaded body (P10F) and body for sub-base (P10B) in the following versions: 5/2 - 5/3 - 3/2+3/2
- External and multipolar electrical connections
- TC serial transmission system
- Maximum application flexibility
- Modular sub-base (single and double) for a high versatility in the composition of the valve manifolds
- Simplified installation
- Easy installation of tubes and fittings thanks to connections being all on the same side

Available ATEX version upon request

TECHNICAL CHARACTERISTICS

Ambient temperature	-5 ÷ +50 °C
Fluid temperature	Max +50 °C
Fluid	10 µm filtered air, with or without lubrication
Commutation system	spool
Ways/Positions	**3/2+3/2, 5/2, 5/3**
Pressure	7 bar (electric control)
	10 bar (pneumatic control)
Control	indirect electro-pneumatic, pneumatic
Return	mechanical spring, pneumomechanical spring, pneumatic, electric
Connections	M5 (P10F) - M5, M7, tube Ø 4 (P10B)
Nominal flow rate (Nl/min)	310 (5/2) 230 (5/3) 250 (3/2+3/2)

CONSTRUCTIVE CHARACTERISTICS

Valve body	zamak
Seals	nitrile rubber (NBR)
Sub-base and actuators	selfestinguishing technopolymer
Spool	aluminum

ELECTRIC CHARACTERISTICS

Electropilot	B10 (0,3 W) B11 (1 W)
Voltage	24 V DC (± 10%)
Power consumption	B10 = 0,3 W, speed -up 1 W (25 ms) B11 = 1 W
Protection degree	IP65
Manual override	recessed button - 1 position

Version with in-line connections (upon request)

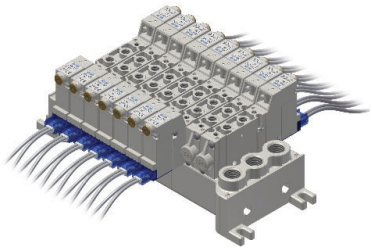

CODIFICATION KEY

P	1	0	F	2	4	4	2	4		
1				2	3	4	5		6	7

1 Series
P10F = threaded body
P10B = body for sub-base

2 Type
2 = 5/2
3 = 5/3 c.c.
4 = 5/3 o.c.
5 = 5/3 p.c.
6 = 3/2+3/2 NC-NC
7 = 3/2+3/2 NC-NO
8 = 3/2+3/2 NO-NO

3 Control 14
3 = pneumatic amplified
4 = electric amplified 90° (0,3W)
6 = electric amplified 90° (1W)

4 Return 12
0 = pneumomechanical spring
1 = mechanical spring
3 = pneumatic amplified
4 = elettric amplified 90° (0,3W)
6 = elettric amplified 90° (1W)

5 Voltage
24 = 24 V DC

6 Variant
D = external pilot supply on valve body (**P10** = M3)

7 ATEX option
X = Atex (upon request)

See ATEX Catalogue for types and versions

o.c. = open centres **c.c.** = closed centres **p.c.** = pressurized centres

Single **electric** impulse

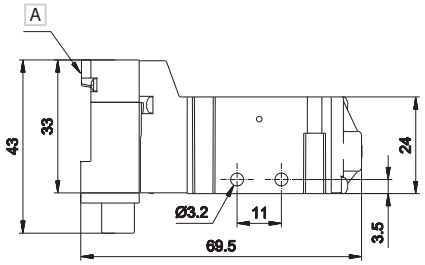

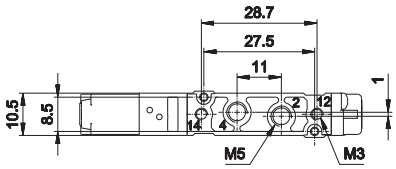

A Manual override

2 - 4 = Use
14 = Control
12 = Return

Weight (Kg): 0,054

	Symbol	Control 14	Return 12	Pressure bar	Resp. Time (ms) En.	Resp. Time (ms) De-en.	Part no.
5/2	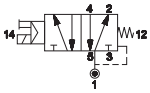	electric amplified	pneumo mechanical spring	1,5÷9	12	20	**P10F24024** **P10F26024**
5/2		electric amplified	mechanical spring	1,9÷9	10	21	**P10F24124** **P10F26124**

Double **electric** impulse

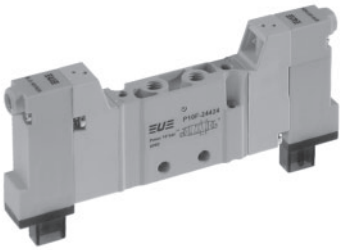

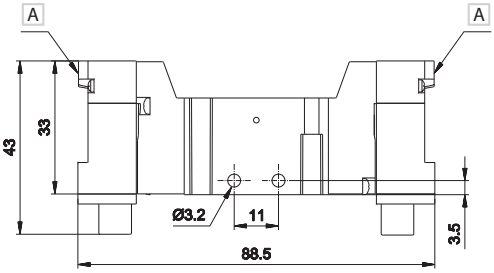

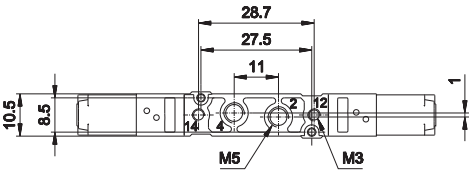

A Manual override

2 - 4 = Use
14 = Control
12 = Return

Weight (Kg): 0,069

	Symbol	Control 14	Return 12	Pressure bar	Resp. Time (ms) En.	Resp. Time (ms) De-en.	Part no.
5/2	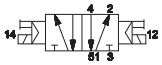	electric amplified	electric amplified	0,7÷9	10	10	**P10F24424** **P10F26624**
5/3 c.c.	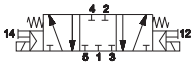	electric amplified	electric amplified	1,5÷9	11	22	**P10F34424** **P10F36624**
5/3 o.c.	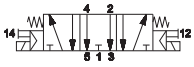	electric amplified	electric amplified	1,5÷9	11	22	**P10F44424** **P10F46624**
5/3 p.c.	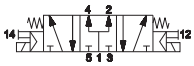	electric amplified	electric amplified	1,5÷9	11	22	**P10F54424** **P10F56624**
3/2 NC + 3/2 NC	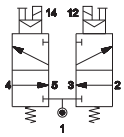	electric amplified	electric amplified	1,3÷9	9	14	**P10F64424** **P10F66624**
3/2 NC + 3/2 NO	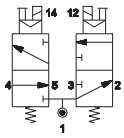	electric amplified	electric amplified	1,3÷9	9	14	**P10F74424** **P10F76624**
3/2 NO + 3/2 NO	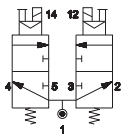	electric amplified	electric amplified	1,3÷9	9	14	**P10F84424** **P10F86624**

o.c. = open centres **c.c.** = closed centres **p.c.** = pressurized centres

Single **pneumatic** impulse

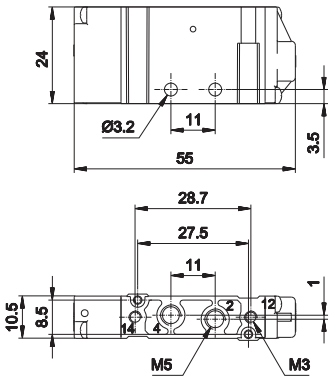

2 - 4 = Use
14 = Control
12 = Return

Weight (Kg): 0,042

	Symbol	Control	Return	Pressure	Resp. Time (ms)		Part no.
		14	12	bar	En.	De-en.	
5/2	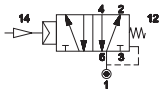	pneumatic amplified	pneumo mechanical spring	1,5÷10	8	14	**P10F230**
5/2	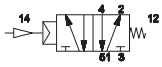	pneumatic amplified	mechanical spring	1,9÷10	7	16	**P10F231**

Double **pneumatic** impulse

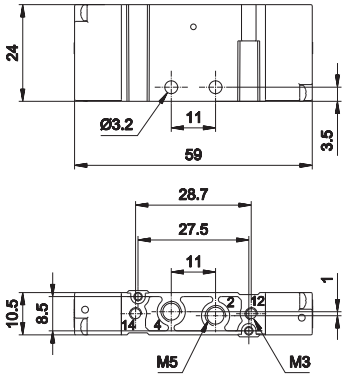

2 - 4 = Use
14 = Control
12 = Return

Weight (Kg): 0,044

	Symbol	Control	Return	Pressure	Resp. Time (ms)		Part no.
		14	12	bar	En.	De-en.	
5/2	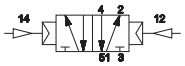	pneumatic amplified	pneumatic amplified	0,6÷10	6	6	**P10F233**
5/3 c.c.	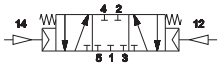	pneumatic amplified	pneumatic amplified	1,5÷10	7	20	**P10F333**
5/3 o.c.	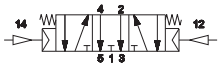	pneumatic amplified	pneumatic amplified	1,5÷10	7	20	**P10F433**
5/3 p.c.	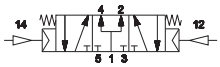	pneumatic amplified	pneumatic amplified	1,5÷10	7	20	**P10F533**
3/2 NC + 3/2 NC	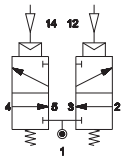	pneumatic amplified	pneumatic amplified	1,3÷10	8	14	**P10F633**
3/2 NC + 3/2 NO	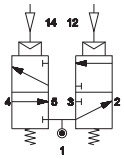	pneumatic amplified	pneumatic amplified	1,3÷10	8	14	**P10F733**
3/2 NO + 3/2 NO	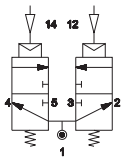	pneumatic amplified	pneumatic amplified	1,3÷10	8	14	**P10F833**

o.c. = open centres **c.c.** = closed centres **p.c.** = pressurized centres

Integrated electric connection

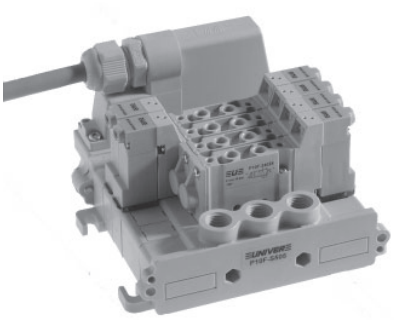

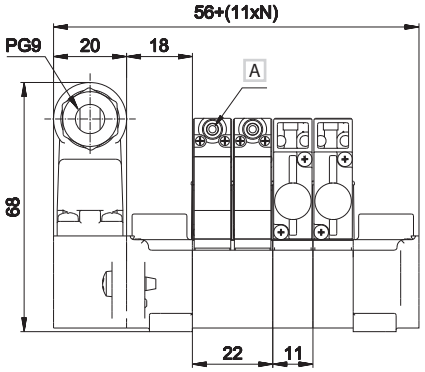

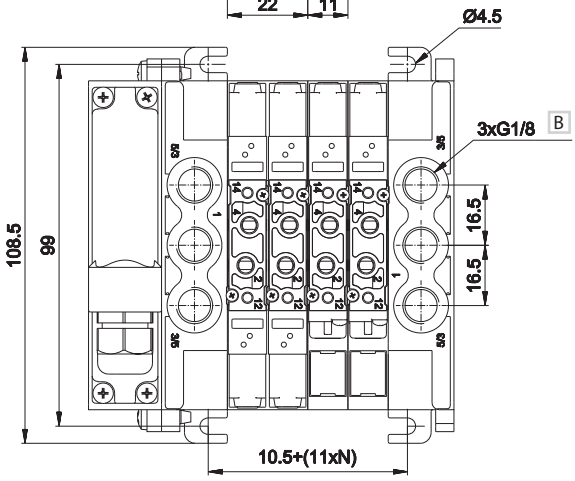

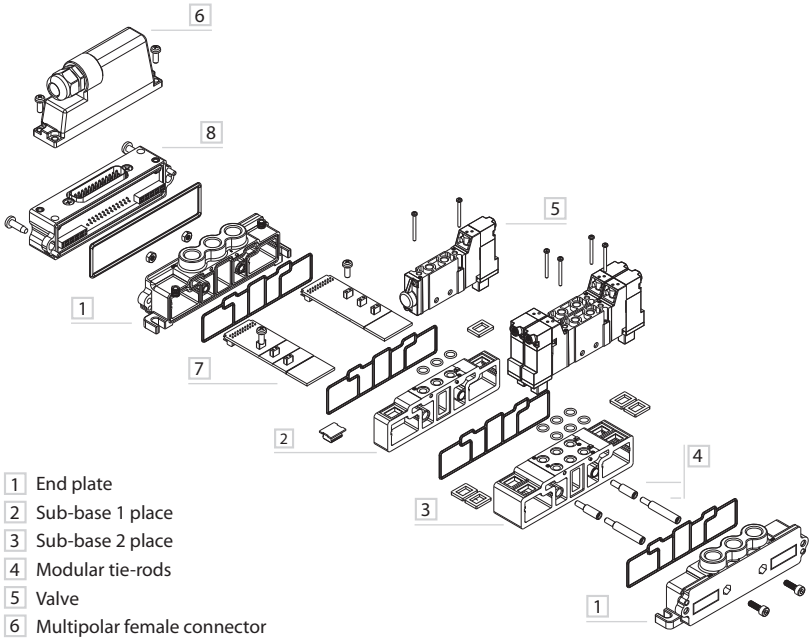

1 End plate
2 Sub-base 1 place
3 Sub-base 2 place
4 Modular tie-rods
5 Valve
6 Multipolar female connector
7 Bus connection card
8 Multipole connection module

1 = Supply port
2 - 4 = Use
3 - 5 = Exhaust
14 = Control
12 = Return

N = Number of valve places

A Manual override
B Tightening torque
G1/8 = max 3 Nm

3

TIM1024	P10SF100	P10SF110	P10SF200	P10SF210	P10SF500
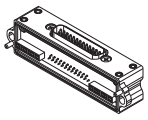	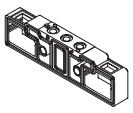	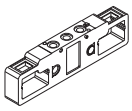	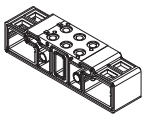	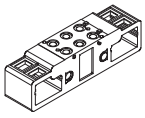	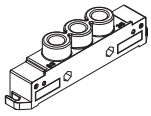
connection module 25 poles male type D-sub weight: 0,047 Kg	sub-base 1 place weight: 0,018 Kg	sub-base 1 place 1-3-5 closed weight: 0,02 Kg	sub-base 2 places weight: 0,04 Kg	sub-base 2 places 1-3-5 closed weight: 0,04 Kg	supply plate G1/8 left for TIM module weight: 0,04 Kg

P10SF505	P10SF550	P10SF560	P10SF570	P10SS14**M	P10SS12**M
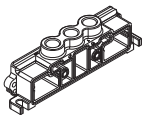	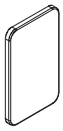	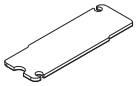	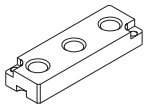	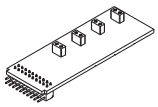	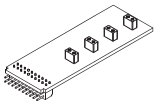
supply plate G1/8 right weight: 0,04 Kg	supply pressure separator plate weight: 0,002 Kg	covering plate for unused valve place weight: 0,003 Kg	intermediate supply plate for threaded version weight: 0,004 Kg	bus connection card, side 14 ** = 04, 06, 08, 10, 12 places weight: 0,006 Kg	bus connection card, side 12 ** = 04, 06, 08, 10, 12 places weight: 0,006 Kg

P10STR01	P10STR02	P10STR05
		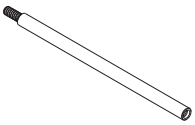
modular tie-rods 1 valve place (package100 pcs.) weight: 0,001 Kg	modular tie-rods 2 valve places (package100 pcs.) weight: 0,003 Kg	modular tie-rods 5 valve places (package100 pcs.) weight: 0,007 Kg

AZ4-SN003A
100 nuts M3 for tie-rods

AZ4-VN0310
100 screws for tie-rods

Subject to change

Electric connection with external connector

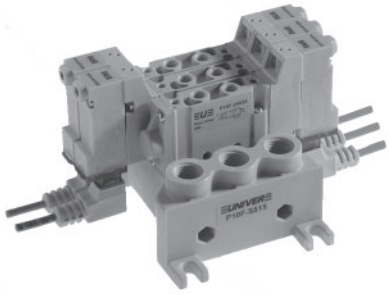

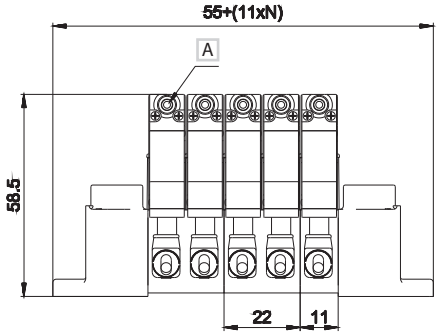

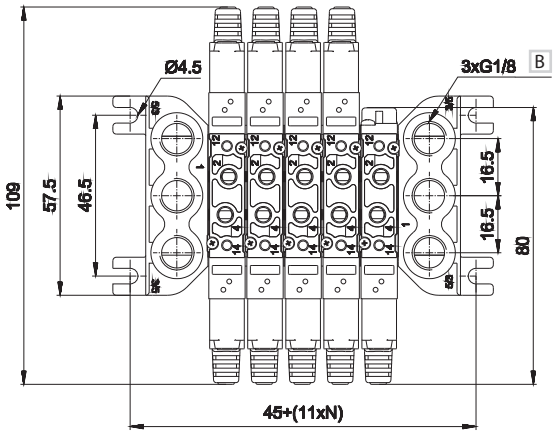

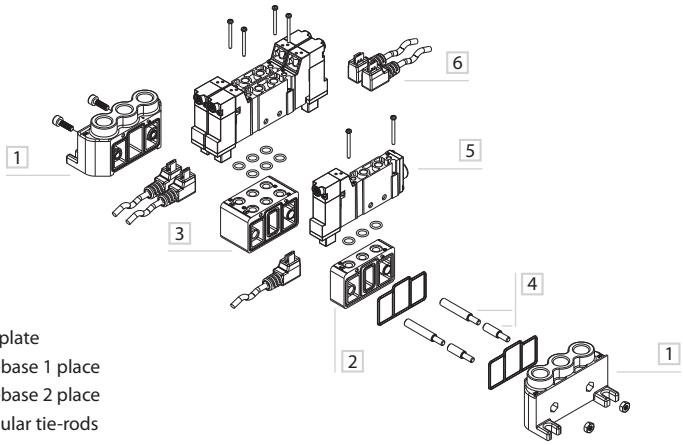

1 End plate
2 Sub-base 1 place
3 Sub-base 2 place
4 Modular tie-rods
5 Valve
6 Single connection

1 = Supply port
2 - 4 = Use
3 - 5 = Exhaust
14 = Control
12 = Return

N = Number of valve places

A Manual override
B Tightening torque
G1/8 = max 3 Nm

P10SF300	P10SF310	P10SF400	P10SF410	P10SF515	P10SF550
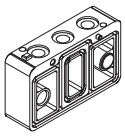	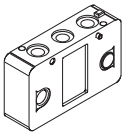	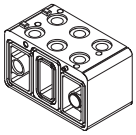	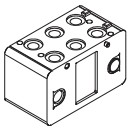	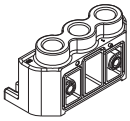	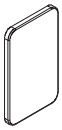
sub-base 1 place weight: 0,011 Kg	sub-base 1 place 1-3-5 closed weight: 0,013 Kg	sub-base 2 places weight: 0,024 Kg	sub-base 2 places 1-3-5 closed weight: 0,026	supply place G1/8 right/left weight: 0,032 Kg	supply pressure separator plate weight: 0,003 Kg

P10SF560	P10SF570	P10STR01	P10STR02	P10STR05
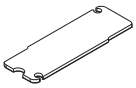	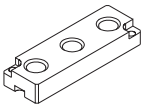			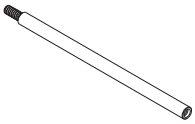
covering plate for unused valve place weight: 0,003 Kg	intermediate supply plate for threaded version weight: 0,004 Kg	modular tie-rods 1 valve place (package100 pcs.) weight: 0,001 Kg	modular tie-rods 2 valve places (package100 pcs.) weight: 0,003 Kg	modular tie-rods 5 valve places (package100 pcs.) weight: 0,007 Kg

AZ4-SN003A
100 nuts for tie-rods

AZ4-VN0310
100 screws for tie-rods

Single **electric** impulse

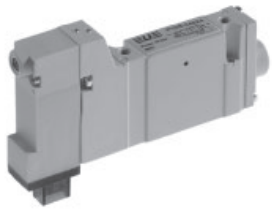

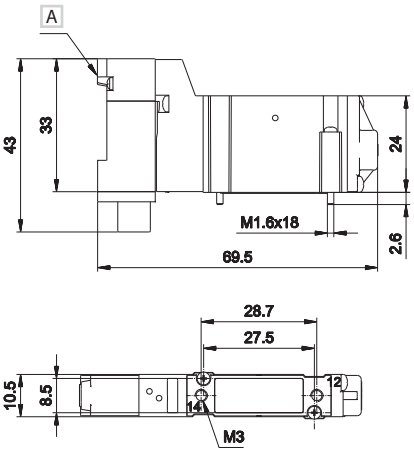

A Manual override

14 = Control
12 = Return

Weight (Kg): 0,054

	Symbol	Control 14	Return 12	Pressure bar	Resp. Time (ms) En.	Resp. Time (ms) De-en.	Part no.
5/2	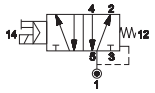	electric amplified	pneumo mechanical spring	1,5÷9	12	20	**P10B24024** **P10B26024**
5/2	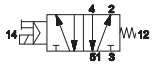	electric amplified	mechanical spring	1,9÷9	10	21	**P10B24124** **P10B26124**

Double **electric** impulse

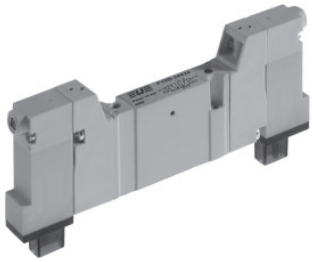

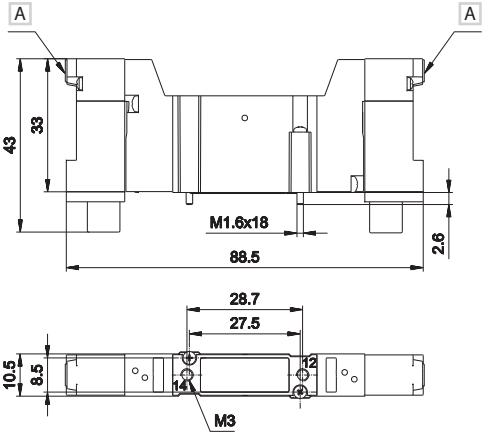

A Manual override

14 = Control
12 = Return

Weight (Kg): 0,069

	Symbol	Control 14	Return 12	Pressure bar	Resp. Time (ms) En.	Resp. Time (ms) De-en.	Part no.
5/2	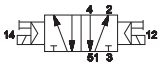	electric amplified	electric amplified	0,7÷9	10	10	**P10B24424** **P10B26624**
5/3 c.c.	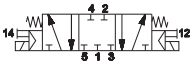	electric amplified	electric amplified	1,5÷9	11	22	**P10B34424** **P10B36624**
5/3 o.c.	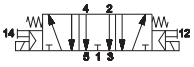	electric amplified	electric amplified	1,5÷9	11	22	**P10B44424** **P10B46624**
5/3 p.c.	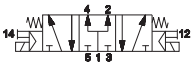	electric amplified	electric amplified	1,5÷9	11	22	**P10B54424** **P10B56624**
3/2 NC + 3/2 NC	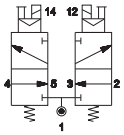	electric amplified	electric amplified	1,3÷9	9	14	**P10B64424** **P10B66624**
3/2 NC + 3/2 NO	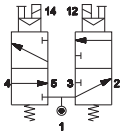	electric amplified	electric amplified	1,3÷9	9	14	**P10B74424** **P10B76624**
3/2 NO + 3/2 NO	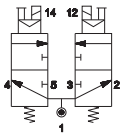	electric amplified	electric amplified	1,3÷9	9	14	**P10B84424** **P10B86624**

o.c. = open centres **c.c.** = closed centres **p.c.** = pressurized centres

Single **pneumatic** impulse

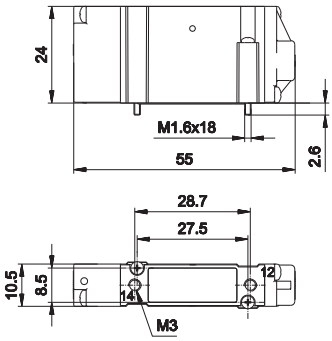

14 = Control
12 = Return

Weight (Kg): 0,042

	Symbol	Control 14	Return 12	Pressure bar	Resp. Time (ms) En.	Resp. Time (ms) De-en.	Part no.
5/2	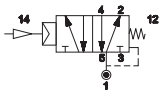	pneumatic amplified	pneumo mechanical spring	1,5÷9	8	14	**P10B230**
5/2	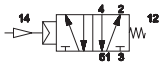	pneumatic amplified	mechanical spring	1,9÷9	7	16	**P10B231**

Double **pneumatic** impulse

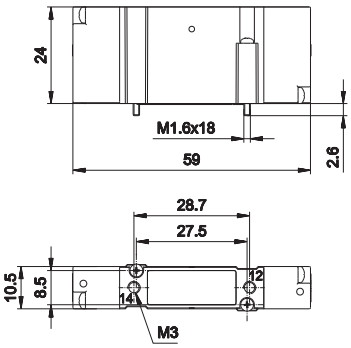

14 = Control
12 = Return

Weight (Kg): 0,044

	Symbol	Control 14	Return 12	Pressure bar	Resp. Time (ms) En.	Resp. Time (ms) De-en.	Part no.
5/2	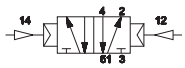	pneumatic amplified	pneumatic amplified	0,6÷9	6	6	**P10B233**
5/3 c.c.	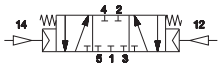	pneumatic amplified	pneumatic amplified	1,5÷9	7	20	**P10B333**
5/3 o.c.	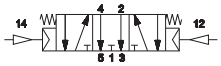	pneumatic amplified	pneumatic amplified	1,5÷9	7	20	**P10B433**
5/3 p.c.	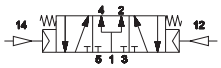	pneumatic amplified	pneumatic amplified	1,5÷9	7	20	**P10B533**
3/2 NC + 3/2 NC	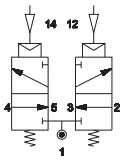	pneumatic amplified	pneumatic amplified	1,3÷9	8	14	**P10B633**
3/2 NC + 3/2 NO	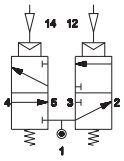	pneumatic amplified	pneumatic amplified	1,3÷9	8	14	**P10B733**
3/2 NO + 3/2 NO	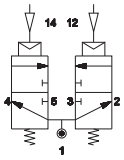	pneumatic amplified	pneumatic amplified	1,3÷9	8	14	**P10B833**

o.c. = open centres **c.c.** = closed centres **p.c.** = pressurized centres

Integrated electric connection

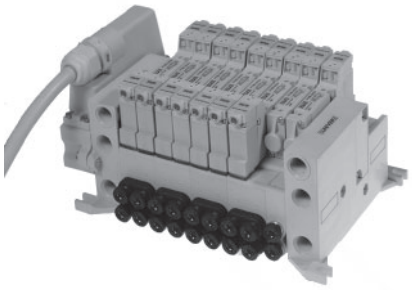

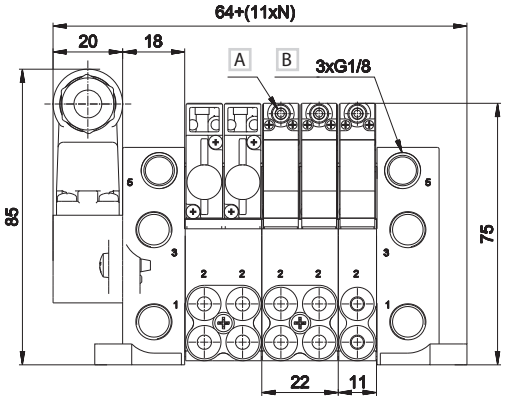

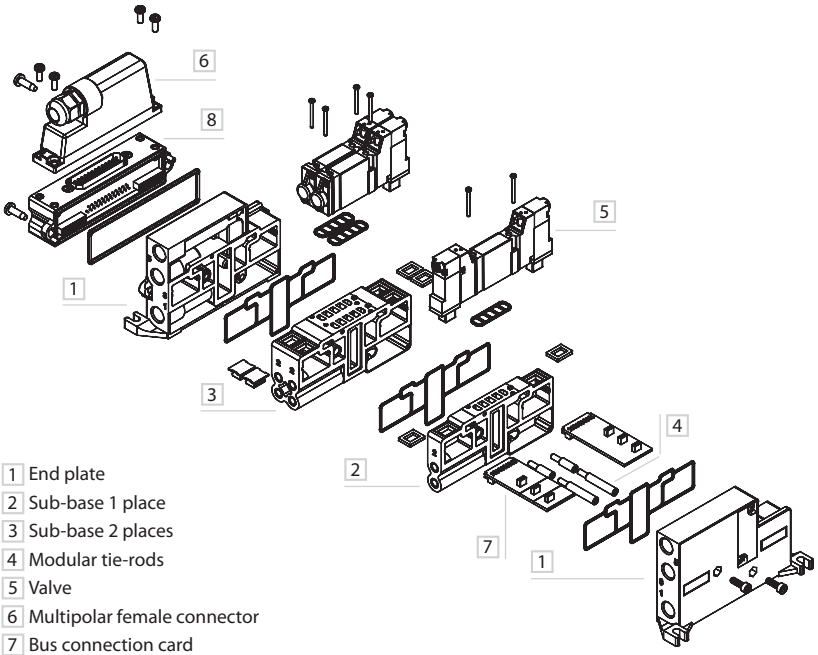

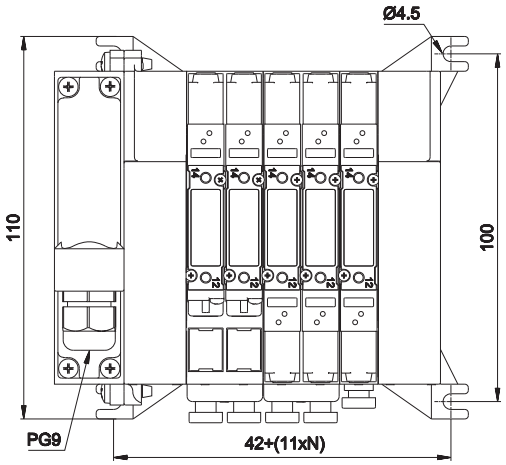

1 End plate
2 Sub-base 1 place
3 Sub-base 2 places
4 Modular tie-rods
5 Valve
6 Multipolar female connector
7 Bus connection card
8 Multipole connection module

1 = Supply port
2 - 4 = Use
3 - 5 = Exhaust
14 = Control
12 = Return

N = Number of valve places

A Manual override
B Tightening torque
G1/8 - M5= max 3 Nm
M7 = 2 Nm

3

TIM1024	P10SB100/107	P10SB110/117	P10SB200/207	P10SB210/217	P10SB304	P10SB314
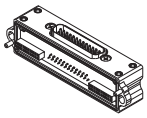	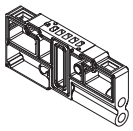	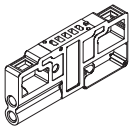	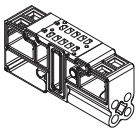	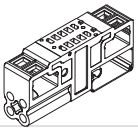	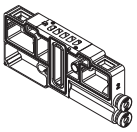	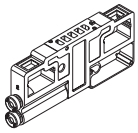
connection module 25 poles male type D-sub weight: 0,047 Kg	sub-base 1 place side outlets M5, M7 weight: 0,031 Kg	sub-base 1 place side outlets M5, M7 1-3-5 closed weight: 0,033 Kg	sub-base 2 places side outlets M5, M7 weight: 0,062 Kg	sub-base 2 places side outlets M5, M7 1-3-5 closed weight: 0,067 Kg	sub-base 1 place side outlets with quick couplings pipe 4 weight: 0,034 Kg	sub-base 1 place side outlets with quick couplings pipe 4 1-3-5 closed weight: 0,034 Kg

P10SB404	P10SB414	P10SB500	P10SB505	P10SB550	P10SB560	P10SB570
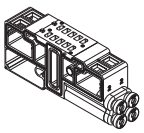	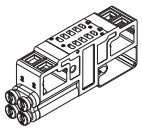	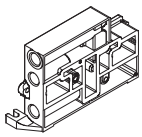	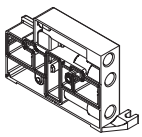	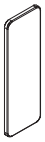	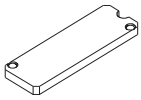	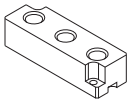
sub-base 2 places side outlets with quick couplings pipe 4 weight: 0,073 Kg	sub-base 1 place side outlets with quick couplings pipe 4 1-3-5 closed weight: 0,068 Kg	supply plate G1/8 left for TIM module weight: 0,074 Kg	supply plate G1/8 right weight: 0,074 Kg	supply pressure separator plate weight: 0,004 Kg	covering plate for unused valve place weight: 0,002 Kg	intermediate supply plate for sub-base weight: 0,007 Kg

P10SS14**M	P10SS12**M	P10STR01	P10STR02	P10STR05
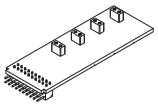	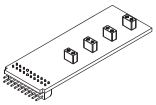			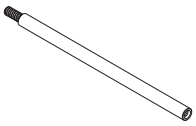
bus connection card, side 14 ** = 04, 06, 08, 10, 12 places weight: 0,006 Kg	bus connection card,side 12 ** = 04, 06, 08, 10, 12 places weight: 0,006 Kg	modular tie-rods 1 valve place (package100 pcs.) weight: 0,001 Kg	modular tie-rods 2 valve places (package100 pcs.) weight: 0,003 Kg	modular tie-rods 5 valve places (package100 pcs.) weight: 0,007 Kg

AZ4-SN003A
100 nuts for tie-rods

AZ4-VN0310
100 screws for tie-rods

Subject to change

D-535U40300
D-535U40500

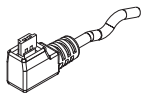

- single connector with cable 3-5 m

TSCFN24S000

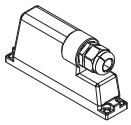

- female connector 25 poles type D-sub no cable M3 x 8 fixing screws

TSCFN24S0300
TSCFN24S0500
TSCFN24S1000

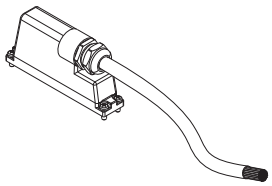

- female connector 25 poles type sub-D cable 3-5-10 m M3 x 8 fixing screws

TSCFN16D0300
TSCFN16D0500
TSCFN16D1000

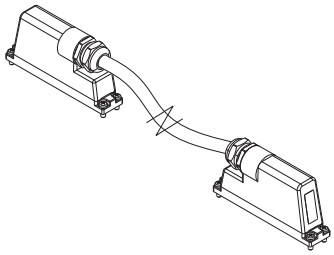

- flying male/female connector sub D (upon request) prewired for 24 coils with cable Ø 8 mm (3-5-10 m lenght) suitable for mobile laying M3 x 8 fixing screws

Colour identification according to standard **DIN 47100**

Female **D-SUB 25 poles**
for connection**12+12 coils**

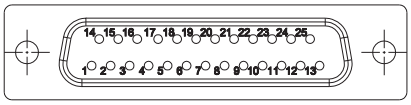

PIN No.	Colour	Coil	Control side TIM1524	Control side TIM151806	Valve No.
1	white	1	14	14	1
2	brown	2	12	12	1
3	green	3	14	14	2
4	yellow	4	12	12	2
5	grey	5	14	14	3
6	pink	6	12	12	3
7	blue	7	14	14	4
8	red	8	12	12	4
9	black	9	14	14	5
10	violet	10	12	12	5
11	grey-pink	11	14	14	6
12	red-blue	12	12	12	6
13	white-green	13	14	14	7
14	brown-green	14	12	14	7
15	white-yellow	15	14	14	8
16	yellow-brown	16	12	14	8
17	white-grey	17	14	14	9
18	grey-brown	18	12	14	9
19	white-pink	19	14	14	10
20	pink-brown	20	12	14	10
21	white-blue	21	14	14	11
22	brown-blue	22	12	14	11
23	white-red	23	14	14	12
24	brown-red	common	-	-	-
25	white-black	24	12	14	12

P15

15 mm COMPACT valves - threaded body and for sub-base mounting
90° ELECTROPILOT CONNECTION

- Standard consumption: 1W; upon request low power consumption: 0,3W
- Quick response times
- High flow rate: the development of the traditional UNIVER spool technology permits high flow rate values
- Compact design: the valve body (15 mm) allows reduced overall dimensions
- Complete solution
- Threaded body (P15F) and body for sub-base (P15B) in the following versions: 5/2 - 5/3 - 3/2+3/2
- External and multipolar electrical connections
- TC serial transmission system
- Maximum application flexibility
- Modular sub-base (singles and doubles) for a high versatility in the composition of valve manifolds
- Simplified installation
- Easy installation of tubes and fittings thanks to connections being all on the same side

Available ATEX version upon request

TECHNICAL CHARACTERISTICS

Ambient temperature	-5 ÷ +50 °C
Fluid temperature	Max +50 °C
Fluid	10 µm filtered air, with or without lubrication
Commutation system	spool
Ways/Positions	3/2+3/2, 5/2, 5/3
Pressure	electric control = Max 9 bar *
	pneumatic control = Max 10 bar
Control	indirect electro-pneumatic, pneumatic
Return	mechanical spring, pneumomechanical spring
Connections	G1/8 (P15F) - G1/8 tubo Ø 4-6-8 (P15B)
Nominal flow rate (Nl/min)	800 (5/2) 720 (5/3) 720 (3/2+3/2)

CONSTRUCTIVE CHARACTERISTICS

Valve body	zamak
Seals	nitrile rubber (NBR)
Sub-base and actuators	selfestinguishing technopolymer
Spool	aluminum

ELECTRIC CHARACTERISTICS

Electropilot	B10 (0,3 W) B11 (1 W)
Voltage	24 V DC (± 10%)
Power consumption	B10 = 0,3 W, speed -up 1 W (25 ms) B11 = 1 W
Protection degree	IP65
Manual override	recessed button - 1 position

Version with in-line connections (upon request)

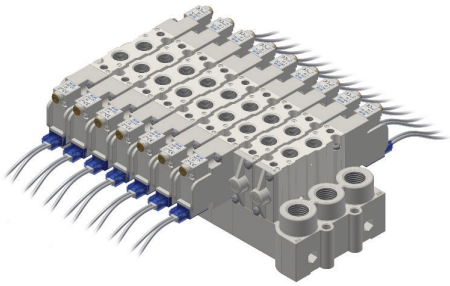

CODIFICATION KEY

P	1	5	F	2	4	4	2	4		
1				2	3	4	5		6	7

1 Series
- **P15F** = threaded body
- **P15B** = Body for sub-base
- **P15D** = Threaded body 15 mm connector

2 Type
- **2** = 5/2
- **3** = 5/3 c.c.
- **4** = 5/3 o.c.
- **5** = 5/3 p.c.
- **6** = 3/2+3/2 NC-NC
- **7** = 3/2+3/2 NC-NO
- **8** = 3/2+3/2 NO-NO

3 Control 14
- **3** = pneumatic amplified
- **4** = elettric amplified 90° (0,3W)
- **6** = electric amplified 90° (1W)

4 Return 12
- **0** = pneumomechanical spring
- **1** = mechanical spring
- **3** = pneumatic amplified
- **4** = electric amplified 90° (0,3W)
- **6** = electric amplified 90° (1W)

o.c. = open centres **c.c.** = closed centres **p.c.** = pressurized centres

5 Voltage
- **24** = 24 V DC

6 Variant
- **D** = external pilot supply on valve body (**P15** = M5)

7 ATEX option
- **X** = Atex (upon request)

See ATEX Catalogue for types and versions

Single electric impulse

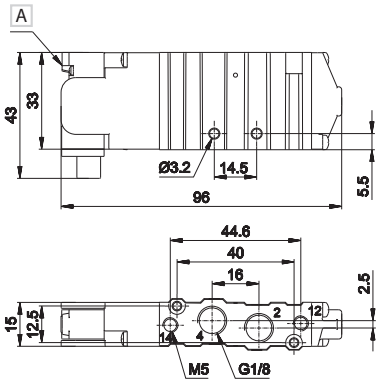

A Manual override

2 - 4 = Use
14 = Control
12 = Return

Weight (Kg): 0,138

	Symbol	Control 14	Return 12	Pressure bar	Resp. Time (ms) En.	Resp. Time (ms) De-en.	Part no.
5/2	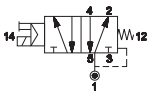	electric amplified	pneumo mechanical spring	1,9÷9	15	24	**P15F24024** **P15F26024**
5/2	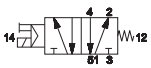	electric amplified	mechanical spring	2÷9	12	21	**P15F24124** **P15F26124**

Double electric impulse

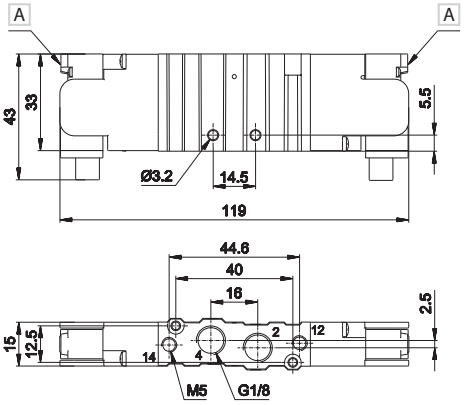

A Manual override

2 - 4 = Use
14 = Control
12 = Return

Weight (Kg): 0,158

	Symbol	Control 14	Return 12	Pressure bar	Resp. Time (ms) En.	Resp. Time (ms) De-en.	Part no.
5/2	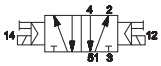	electric amplified	electric amplified	0,7÷9	11	11	**P15F24424** **P15F26624**
5/3 c.c.	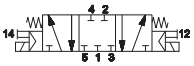	electric amplified	electric amplified	1,6÷9	11	35	**P15F34424** **P15F36624**
5/3 o.c.	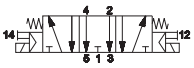	electric amplified	electric amplified	1,6÷9	11	35	**P15F44424** **P15F66624**
5/3 p.c.	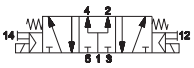	electric amplified	electric amplified	1,6÷9	11	35	**P15F54424** **P15F56624**
3/2 NC + 3/2 NC	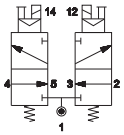	electric amplified	electric amplified	1,5÷9	14	16	**P15F64424** **P15F66624**
3/2 NC + 3/2 NO	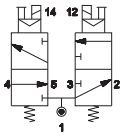	electric amplified	electric amplified	1,5÷9	14	16	**P15F74424** **P15F76624**
3/2 NO + 3/2 NO	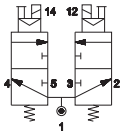	electric amplified	electric amplified	1,5÷9	14	16	**P15F84424** **P15F86624**

o.c. = open centres **c.c.** = closed centres **p.c.** = pressurized centres

Single electric impulse

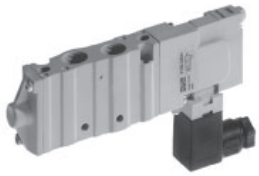

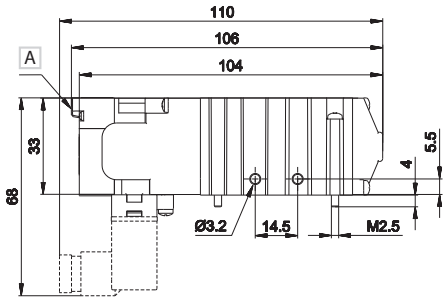

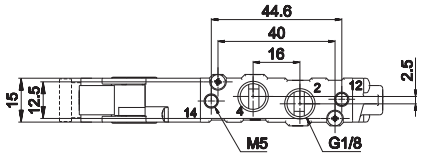

Weight (Kg): 0,142

	Symbol	Control	Return	Pressure	Resp. Time (ms)		Part no.
		14	12	bar	En.	De-en.	
5/2	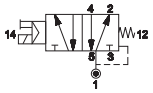	electric amplified	pneumo mechanical spring	1,9÷9	15	24	P15D24024 P15D26024
5/2	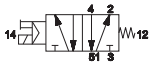	electric amplified	mechanical spring	2÷9	12	21	P15D24124 P15D26124

A Manual override

2 - 4 = Use
14 = Control
12 = Return

Double electric impulse

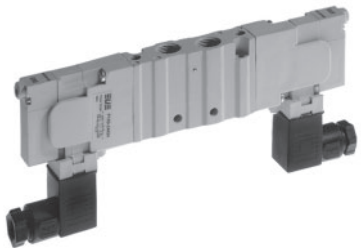

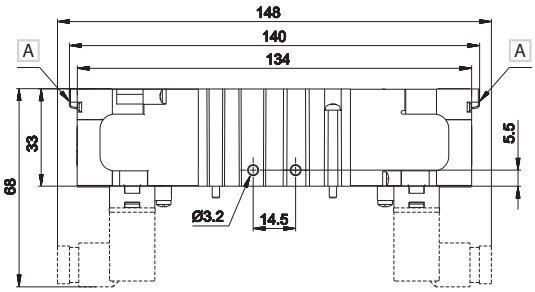

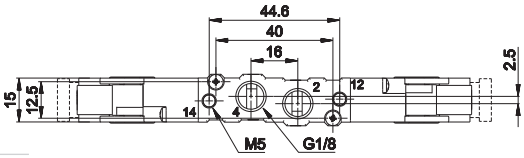

> AM-5109 connector not included

Weight (Kg): 0,166

	Symbol	Control	Return	Pressure	Resp. Time (ms)		Part no.
		14	12	bar	En.	De-en.	
5/2	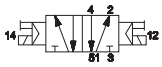	electric amplified	electric amplified	0,7÷9	16	16	P15D24424 P15D26624
5/3 c.c.	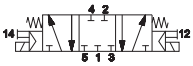	electric amplified	electric amplified	1,6÷9	11	35	P15D34424 P15D36624
5/3 o.c.	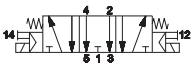	electric amplified	electric amplified	1,6÷9	11	35	P15D44424 P15D46624
5/3 p.c.	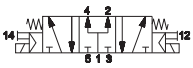	electric amplified	electric amplified	1,6÷9	11	35	P15D54424 P15D56624
3/2 NC + 3/2 NC	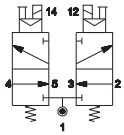	electric amplified	electric amplified	1,5÷9	14	16	P15D64424 P15D66624
3/2 NC + 3/2 NO	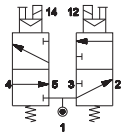	electric amplified	electric amplified	1,5÷9	14	16	P15D74424 P15D76624
3/2 NO + 3/2 NO	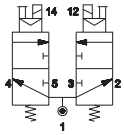	electric amplified	electric amplified	1,5÷9	14	16	P15D84424 P15D86624

o.c. = open centres **c.c.** = closed centres **p.c.** = pressurized centres

A Manual override

2 - 4 = Use
14 = Control
12 = Return

Single pneumatic impulse

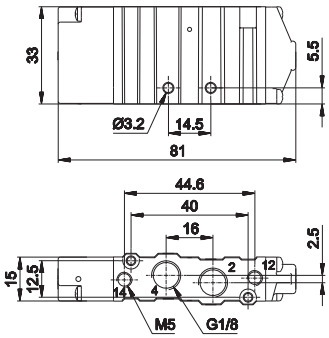

2 - 4 = Use
14 = Control
12 = Return

Weight (Kg): 0,042

	Symbol	Control 14	Return 12	Pressure bar	Resp. Time (ms) En.	Resp. Time (ms) De-en.	Part no.
5/2	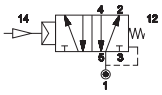	pneumatic amplified	pneumo mechanical spring	1,9÷10	11	15	**P15F230**
5/2	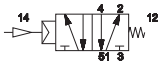	pneumatic amplified	mechanical spring	2÷10	10	14	**P15F231**

Double pneumatic impulse

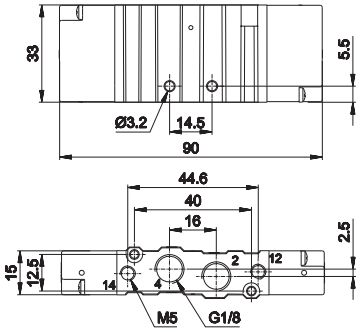

2 - 4 = Use
14 = Control
12 = Return

Weight (Kg): 0,044

	Symbol	Control 14	Return 12	Pressure bar	Resp. Time (ms) En.	Resp. Time (ms) De-en.	Part no.
5/2	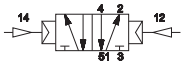	pneumatic amplified	pneumatic amplified	0,7÷10	10	10	**P15F233**
5/3 c.c.	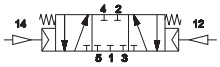	pneumatic amplified	pneumatic amplified	1,6÷10	9	21	**P15F333**
5/3 o.c.	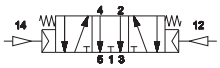	pneumatic amplified	pneumatic amplified	1,6÷10	9	21	**P15F433**
5/3 p.c.	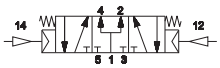	pneumatic amplified	pneumatic amplified	1,6÷10	9	21	**P15F533**
3/2 NC + 3/2 NC	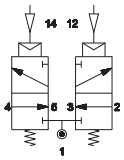	pneumatic amplified	pneumatic amplified	1,3÷10	10	14	**P15F633**
3/2 NC + 3/2 NO	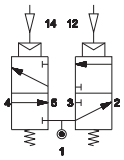	pneumatic amplified	pneumatic amplified	1,3÷10	10	14	**P15F733**
3/2 NO + 3/2 NO	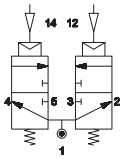	pneumatic amplified	pneumatic amplified	1,3÷10	10	14	**P15F833**

o.c. = open centres **c.c.** = closed centres **p.c.** = pressurized centres

Integrated electric connection

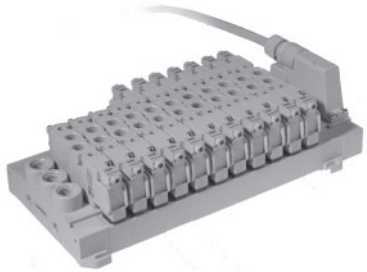

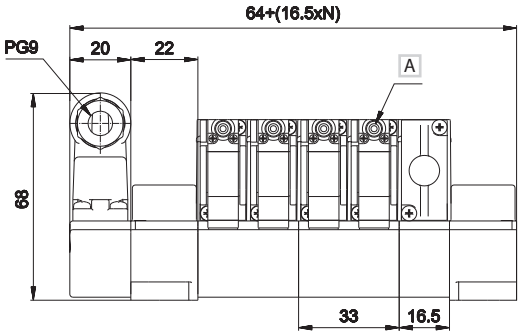

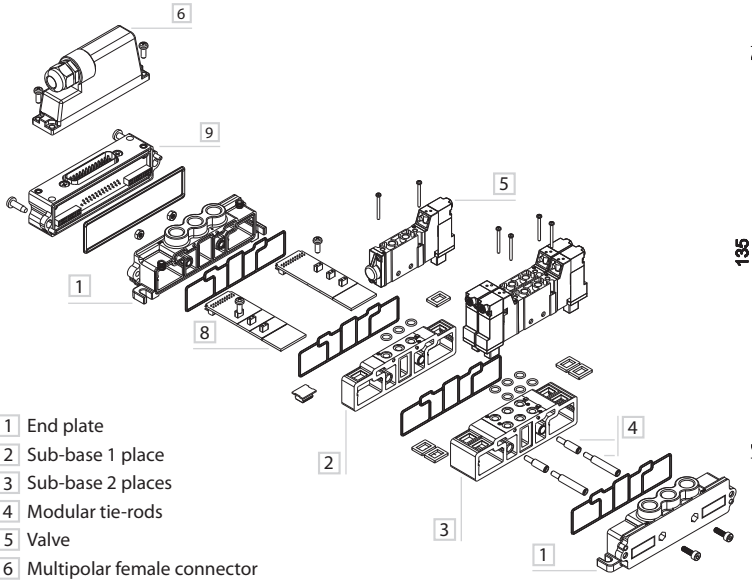

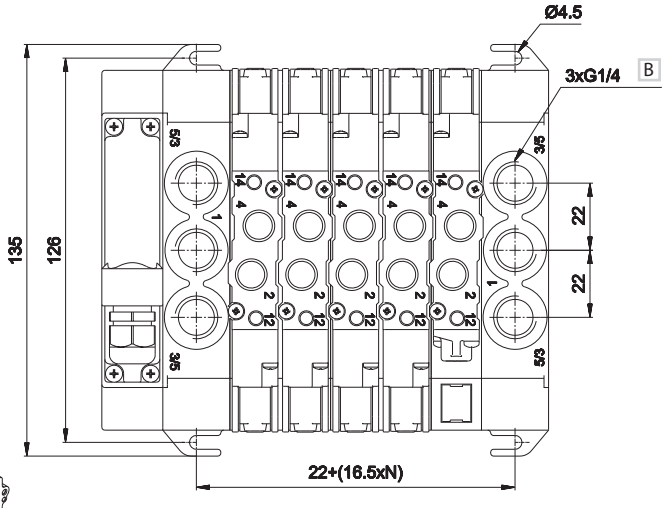

1 End plate
2 Sub-base 1 place
3 Sub-base 2 places
4 Modular tie-rods
5 Valve
6 Multipolar female connector
7 Single connector
8 Bus connection card
9 Multipole connection module

1 = Supply port
2 - 4 = Use
3 - 5 = Exhaust
14 = Control
12 = Return

A Manual override
B Tightening torque
G1/4 = max 10 Nm

N = Number of valve places

TIM1524	TIM151806	TIM1536	P15SF100	P15SF110	P15SF200	P15SF210
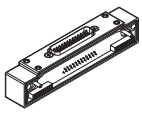	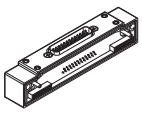	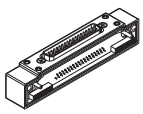	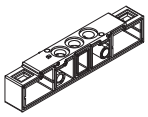	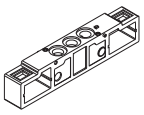	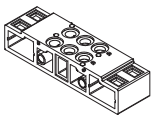	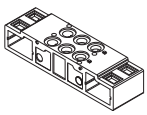
connection module 25 poles male 12+12 coils type D-sub weight: 0,047 Kg	connection module 25 poles male 18 coils, side 14 6 coils, side 12 type D-sub weight: 0,055 Kg	connection module 37 poles male 16+16 coils type D-sub weight: 0,057 Kg	sub-base 1 place weight: 0,037 Kg	sub-base 1 place 1-3-5 closed weight: 0,038 Kg	sub-base 2 places weight: 0,073 Kg	sub-base 2 places 1-3-5 closed weight: 0,074 Kg

P15SF500	P15SF505	P15SF550	P15SF560	P15SF570	P15SS**01MC	P15SS**..M
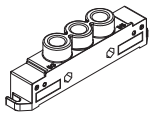	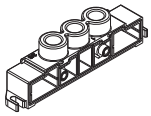	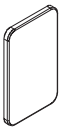	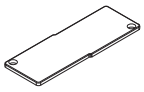	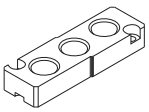	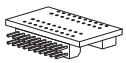	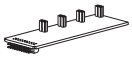
supply plate G1/4 left for TIM module weight: 0,064 Kg	supply plate G1/4 right weight: 0,065 Kg	supply pressure separator plate weight: 0,003 Kg	covering plate for unused valve place weight: 0,007 Kg	intermediate supply plate for threaded version weight: 0,011 Kg	U-bus connection card, male ** = side14 or 12 weight: 0,004 Kg	bus connection card, male ** = side 14 or 12 .. = 04, 06, 08 places weight: 0,009 Kg 04 places 0,010 Kg 06 places 0,013 Kg 08 places

P15SS**08MF	P15SS**04MFP	P15SS**04MP	P15STR01	P15STR02	P15STR05
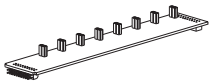	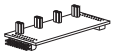	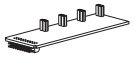			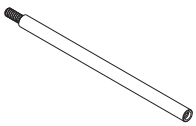
bus connection card male/female ** = side 14 or 12 weight: 0,014 Kg	bus connection card male/female extension ** = side 14 o 12 weight: 0,008 Kg	bus card extension ** = side 14 o 12 weight: 0,006 Kg	modular tie-rods 1 valve place (package 100 pcs.) weight: 0,003 Kg	modular tie-rods 2 valve places (package 100 pcs.) weight: 0,007 Kg	modular tie-rods 5 valve places (package 100 pcs.) weight: 0,018 Kg

AZ4-SN004A
100 nuts M4 for tie-rods

AZ4-VN0414
100 screws 4x14 for tie-rods

Electric connection with external connector

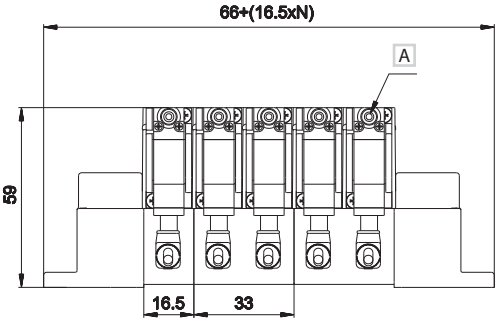

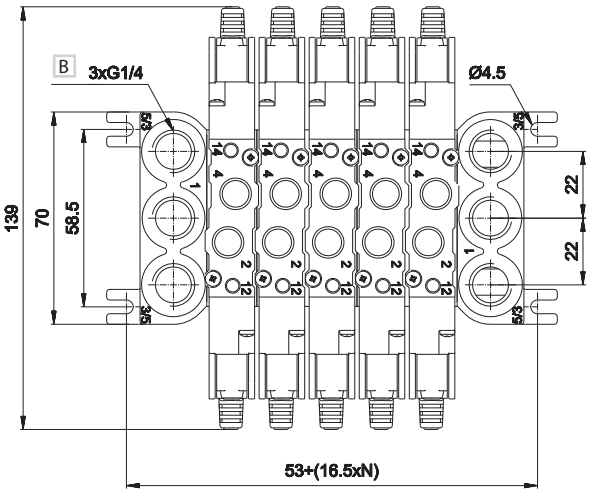

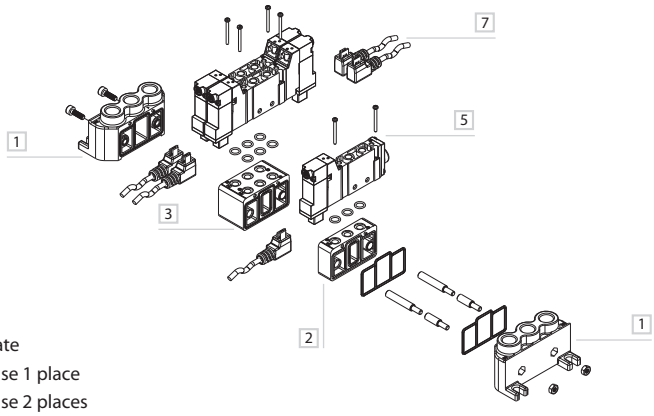

1 End plate
2 Sub-base 1 place
3 Sub-base 2 places
4 Modular tie-rods
5 Valve
6 Multipolar female connector
7 Single connector
8 Bus connection card
9 Multipole connection module

1 = Supply port
2 - 4 = Use
3 - 5 = Exhaust
14 = Control
12 = Return

N = Number of valve places

A Manual override
B Tightening torque
G1/4 = max 10 Nm

P15SF300	P15SF310	P15SF400	P15SF410	P15SF515	P15SF550	P15SF560
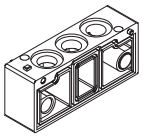	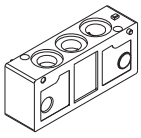	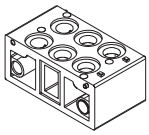	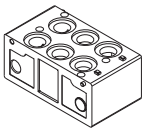	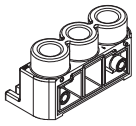	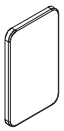	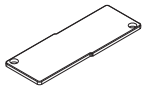
sub-base 1 place weight: 0,023 Kg	sub-base 1 place 1-3-5 closed weight: 0,024 Kg	sub-base 2 places weight: 0,046 Kg	sub-base 2 places 1-3-5 closed weight: 0,048 Kg	supply plate right/left G1/4 weight: 0,050 Kg	supply pressure separator plate weight: 0,001 Kg	covering plate for unused valve place weight: 0,007 Kg

P15SF570	P15STR01	P15STR02	P15STR05
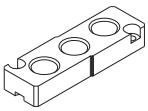			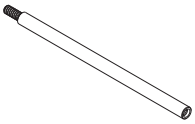
intermediate supply plate for threaded version weight: 0,009 Kg	modular tie-rods 1 valve place (package 100 pcs.) weight: 0,003 Kg	modular tie-rods 2 valve places (package 100 pcs.) weight: 0,007 Kg	modular tie-rods 5 valve places (package 100 pcs.) weight: 0,018 Kg

AZ4-SN004A
100 nuts M4 for tie-rods

AZ4-VN0414
100 screws 4x14 for tie-rods

Subject to change

Single electric impulse

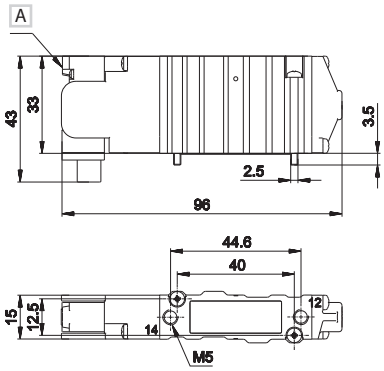

A Manual override

14 = Control
12 = Return

Weight (Kg): 0,138

	Symbol	Control 14	Return 12	Pressure bar	Resp. Time (ms) En.	Resp. Time (ms) De-en.	Part no.
5/2	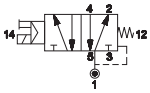	electric amplified	pneumo mechanical spring	1,9÷9	15	24	P15B24024 P15B26024
5/2		electric amplified	mechanical spring	2÷9	12	21	P15B24124 P15B26124

Double electric impulse

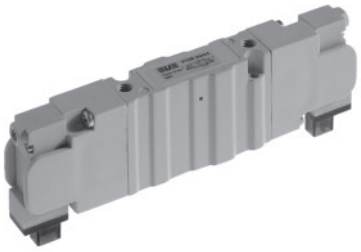

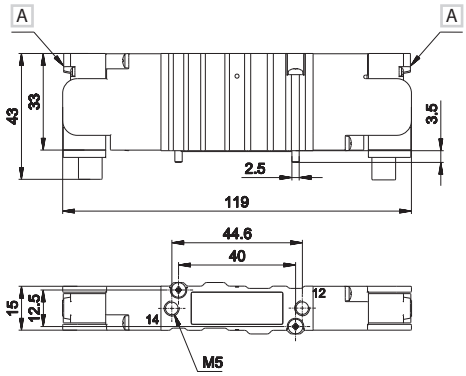

A Manual override

14 = Control
12 = Return

Weight (Kg): 0,158

	Symbol	Control 14	Return 12	Pressure bar	Resp. Time (ms) En.	Resp. Time (ms) De-en.	Part no.
5/2	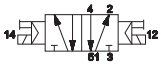	electric amplified	electric amplified	0,7÷9	11	11	P15B24424 P15B26624
5/3 c.c.	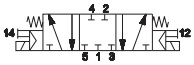	electric amplified	electric amplified	1,6÷9	11	35	P15B34424 P15B36624
5/3 o.c.	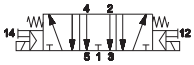	electric amplified	electric amplified	1,6÷9	11	35	P15B44424 P15B46624
5/3 p.c.	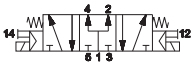	electric amplified	electric amplified	1,6÷9	11	35	P15B54424 P15B56624
3/2 NC + 3/2 NC	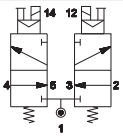	electric amplified	electric amplified	1,5÷9	14	16	P15B64424 P15B66624
3/2 NC + 3/2 NO	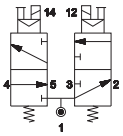	electric amplified	electric amplified	1,5÷9	14	16	P15B74424 P15B76624
3/2 NO + 3/2 NO	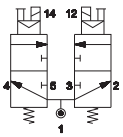	electric amplified	electric amplified	1,5÷9	14	16	P15B84424 P15B86624

o.c. = open centres **c.c.** = closed centres **p.c.** = pressurized centres

Single pneumatic impulse

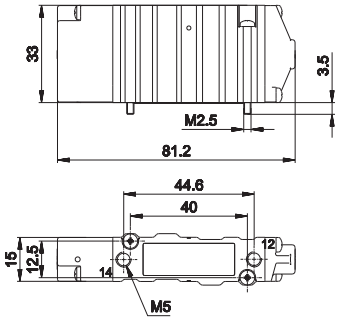

14 = Control
12 = Return

Weight (Kg): 0,127

	Symbol	Control 14	Return 12	Pressure bar	Resp. Time (ms) En.	Resp. Time (ms) De-en.	Part no.
5/2	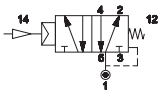	pneumatic amplified	pneumo mechanical spring	1,9÷9	11	15	**P15B230**
5/2	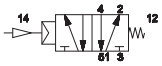	pneumatic amplified	mechanical spring	2÷9	10	14	**P15B231**

Double pneumatic impulse

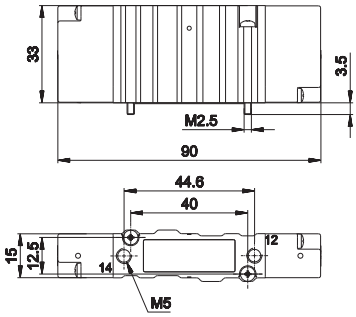

14 = Control
12 = Return

Weight (Kg): 0,132

	Symbol	Control 14	Return 12	Pressure bar	Resp. Time (ms) En.	Resp. Time (ms) De-en.	Part no.
5/2	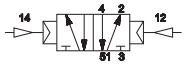	pneumatic amplified	pneumatic amplified	0,7÷9	10	10	**P15B233**
5/3 c.c.	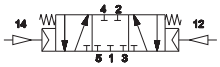	pneumatic amplified	pneumatic amplified	1,6÷9	9	21	**P15B333**
5/3 o.c.	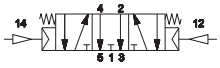	pneumatic amplified	pneumatic amplified	1,6÷9	9	21	**P15B433**
5/3 p.c.	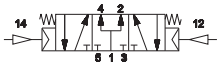	pneumatic amplified	pneumatic amplified	1,6÷9	9	21	**P15B533**
3/2 NC + 3/2 NC	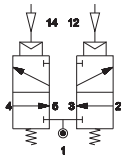	pneumatic amplified	pneumatic amplified	1,3÷9	10	14	**P15B633**
3/2 NC + 3/2 NO	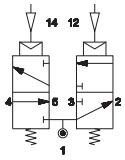	pneumatic amplified	pneumatic amplified	1,3÷9	10	14	**P15B733**
3/2 NO + 3/2 NO	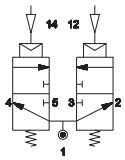	pneumatic amplified	pneumatic amplified	1,3÷9	10	14	**P15B833**

o.c. = open centres **c.c.** = closed centres **p.c.** = pressurized centres

Integrated electric connection

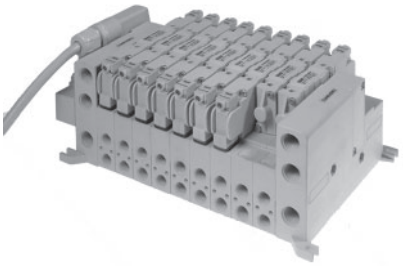

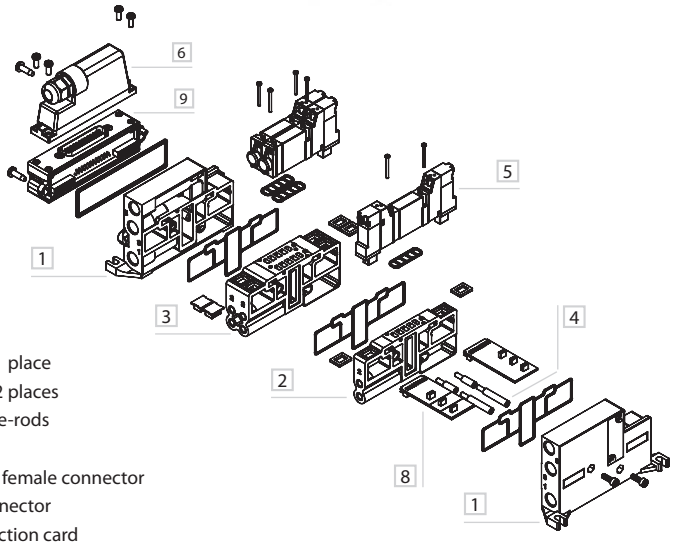

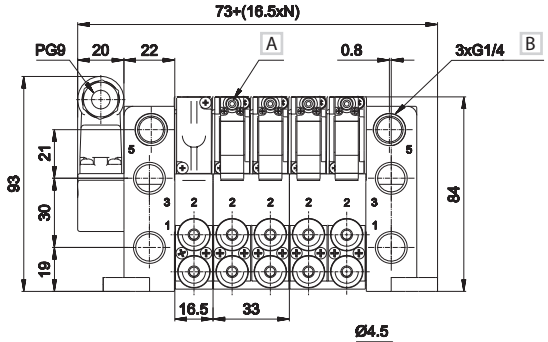

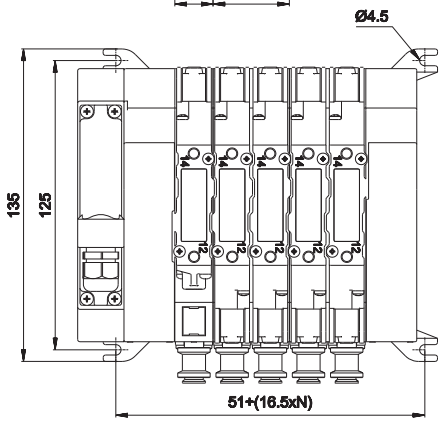

1 End plate
2 Sub-base 1 place
3 Sub-base 2 places
4 Modular tie-rods
5 Valve
6 Multipolar female connector
7 Single connector
8 Bus connection card
9 Multipole connection module

1 = Supply port
2 - 4 = Use
3 - 5 = Exhaust
14 = Control
12 = Return

A Manual override
B Tightening torque
G1/4 = max 10 Nm
G1/8 = max 3 Nm

N = Number of valve places

TIM1524	TIM151806	TIM1536	P15SB100	P15SB110	P15SB200	P15SB210
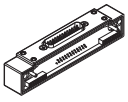	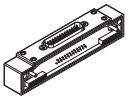	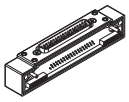	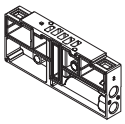	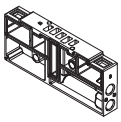	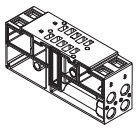	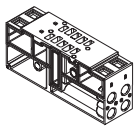
connection module 25 poles male 12+12 coils type D-sub weight: 0,047 Kg	connection module 25 poles male 18 coils side 14 6 coils side 12 type D-sub weight: 0,055 Kg	connection module 37 poles male 16+16 coils type D-sub weight: 0,057 Kg	sub-base 1 place side outlets G1/8 integrated version weight: 0,060 Kg	sub-base 1 place side outlets G1/8 integrated version 1-3-5 closed weight: 0,060 Kg	sub-base 2 places side outlets G1/8 weight: 0,133 Kg	sub-base 2 places side outlets G1/8 integrated version 1-3-5 closed weight: 0,133 Kg

P15SB300	P15SB310	P15SB400	P15SB410	P15SB500	P15SB505	P15SB550
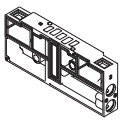	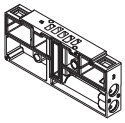	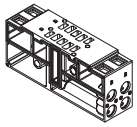	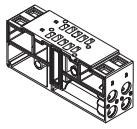	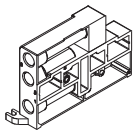	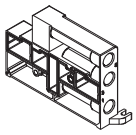	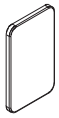
sub-base 1 place side outlets for quick couplings integrated version weight: 0,060 Kg	sub-base 1 place side outlets for quick couplings 1-3-5 closed weight: 0,060 Kg	sub-base 2 places side outlets for quick couplings integrated version weight: 0,133 Kg	sub-base 2 places side outlets for quick couplings 1-3-5 closed weight: 0,133 Kg	supply plate G1/4 left for TIM module weight: 0,127 Kg	supply plate G1/4 right weight: 0,124 Kg	supply pressure separator plate weight: 0,003 Kg

P15SB560	P15SB570	P15SS**01MC	P15SS**..M	P15SS**08MF	P15SS**04MFP	P15SS**04MP
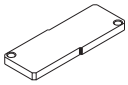	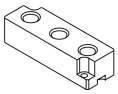	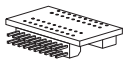	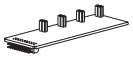	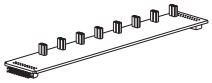	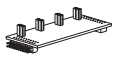	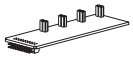
covering plate for unused valve place weight: 0,007 Kg	intermediate supply plate for sub-base weight: 0,016 Kg	U-bus connection card, male ** = lato14 o 12 weight: 0,004 Kg	bus connection card male ** = side14 or 12 .. = 04, 06, 08 places weight: 0,009 Kg 04 places 0,010 Kg 06 places 0,013 Kg 08 places	bus connection card male/female extension ** = side14 or 12 weight: 0,014 Kg	bus connection card male/female extension ** = side14 or 12 weight: 0,008 Kg	bus card extension ** = side14 or 12 weight: 0,006 Kg

P15STR01	P15STR02	P15STR05	GZR-V100..
		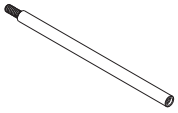	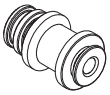
modular tie-rods 1 valve place (package 100 pcs.) weight: 0,003 Kg	modular tie-rods 2 valve places (package 100 pcs.) weight: 0,007 Kg	modular tie-rods 5 valve places (package 100 pcs.) weight: 0,018 Kg	fitting .. = 04, 06, 08 places weight: 0,013 Kg

AZ4-SN004A
100 nuts M4 for tie-rods

AZ4-VN0414
100 screws 4x14 for tie-rods

D-535U40300
D-535U40500

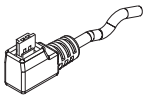

- single connector with cable 3-5 m

AM-5109

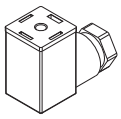

- 15 mm connector

TSCFN24S000
TSCFN36S000

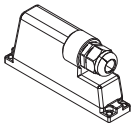

- fermale connector 25/37 poles type D-sub no cable M3 x 8 fixing screws

TSCFN24S0300
TSCFN24S0500
TSCFN24S1000
TSCFN32S0300
TSCFN32S0500
TSCFN32S1000

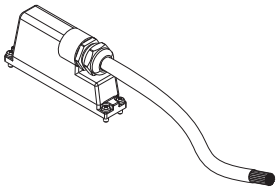

- fermale connector 25/37 poles type D-sub with cable 3-5-10 m M3 x 8 fixing screws

TSCFN16D0300
TSCFN16D0500
TSCFN16D1000

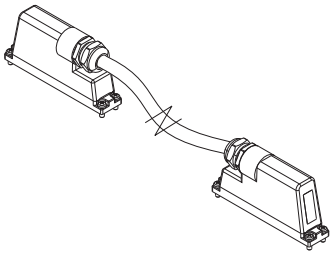

- flying male/female connector sub D (upon request) prewired for 24 coils with cable Ø 8 mm (3-5-10 m lenght) suitable for mobile laying M3 x 8 fixing screws

Colour identification according to standard **DIN 47100**

Female **D-SUB 25 poles**
for connection**12+12 coils**

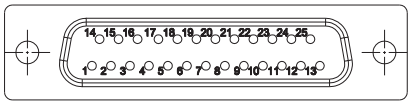

PIN No.	Colour	Coil	Control side TIM1524	Control side TIM151806	Valve No.
1	white	1	14	14	1
2	brown	2	12	12	1
3	green	3	14	14	2
4	yellow	4	12	12	2
5	grey	5	14	14	3
6	pink	6	12	12	3
7	blue	7	14	14	4
8	red	8	12	12	4
9	black	9	14	14	5
10	violet	10	12	12	5
11	grey-pink	11	14	14	6
12	red-blue	12	12	12	6
13	white-green	13	14	14	7
14	brown-green	14	12	14	7
15	white-yellow	15	14	14	8
16	yellow-brown	16	12	14	8
17	white-grey	17	14	14	9
18	grey-brown	18	12	14	9
19	white-pink	19	14	14	10
20	pink-brown	20	12	14	10
21	white-blue	21	14	14	11
22	brown-blue	22	12	14	11
23	white-red	23	14	14	12
24	brown-red	common	-	-	-
25	white-black	24	12	14	12

Female **D-SUB 37 poles**
for connection **16+16 coils**

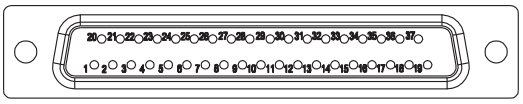

PIN No.	Colour	Coil	Control side TIM1536	Valve No.
1	white	1	14	1
2	brown	2	12	1
3	green	3	14	2
4	yellow	4	12	2
5	grey	5	14	3
6	pink	6	12	3
7	blue	7	14	4
8	red	8	12	4
9	black	9	14	5
10	violet	10	12	5
11	grey-pink	11	14	6
12	red-blue	12	12	6
13	white-green	13	14	7
14	brown-green	14	12	7
15	white-yellow	15	14	8
16	yellow-brown	16	12	8
17	white-grey	17	14	9
18	grey-brown	18	12	9
19	white-pink	19	14	10
20	pink-brown	20	12	10
21	white-blue	21	14	11
22	brown-blue	22	12	11
23	white-red	23	14	12
24	brown-red	24	12	12
25	white-black	25	14	12
26	brown-black	26	12	13
27	grey-green	27	14	14
28	yellow-grey	28	12	14
29	pink-green	29	14	15
30	yellow-pink	30	12	15
31	green-blue	31	14	16
32	yellow-blue	32	12	16
33	-	not used	-	-
34	-	not used	-	-
35	-	not used	-	-
36	yellow-black	common	-	-
37	yellow-red	common	-	-
	shield	law		

EL18F

ESSENTIAL valves 18 mm - G1/8

High flow rate: 800 Nl/min
Reduced dimensions: 18 mm
Complete solution: 5/2 - 5/3 - 3/2+3/2
Strong: metallic body

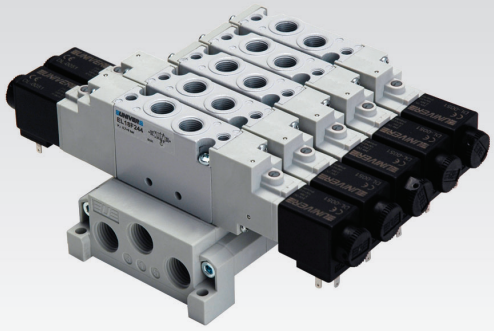

Available ATEX version upon request

II 3 GD c nA II T5 - 10°C ≤ Ta ≤ 45°C

TECHNICAL CHARACTERISTICS

Ambient temperature	-5 ÷ 50 °C
Fluid temperature	Max 50 °C
Fluid	10 µm filtered air, with or without lubrication
Commutation system	spool
Ways/Positions	5/2 - 5/3 - 3/2+3/2
Max Pressure	8 bar (electric control), 10 bar (pneumatic control)
Control	indirect electro-pneumatic, pneumatic
Return	mechanical spring, pneumomechanical spring, pneumatic amplified, electric amplified
Connections	G1/8
Nominal flow rate (Nl/min)	**800** (5/2) **720** (5/3) **720** (3/2+3/2)

CONSTRUCTIVE CHARACTERISTICS

Valve body	zamak
Seals	nitrile rubber (NBR)
Actuators	aluminium
Sub-base	technopolymer aluminium
Spool	aluminium

ELECTRIC CHARACTERISTICS

Electropilot	U06
Coil	DL series 17 mm
Voltage	12 V DC - 24 V DC - 24 V AC - 110 V AC - 230 V AC
Power consumption	2,5 W 5 VA
Protection degree	IP65
Manual override	impulse 1-2 positions

CODIFICATION KEY

E	L	1	8	F	2	5	0		
1					2	3	4	5	6

1 Series
EL18F = ESSENTIAL Valves 18 mm - G1/8

2 Type
2 = 5/2
3 = 5/3 **c.c.**
4 = 5/3 **o.c.**
5 = 5/3 **p.c.**
6 = 3/2+3/2 NC-NC
7 = 3/2+3/2 NC-NO
8 = 3/2+3/2 NO-NO

3 Control 14
3 = Pneumatic amplified
5 = Electrical amplified DC/AC

4 Return 12
0 = Pneumomechanical spring
1 = Mechanical spring
3 = Pneumatic amplified
5 = Electrical amplified DC/AC

5 Option
D = External servo-assistance of the pilot

6 ATEX Option
X = Atex (upon request)

See ATEX Catalogue for types and versions

c.c. = closed centres **o.c.** = open centres **p.c.** = pressurized centres

Subject to change

Single electric impulse

A Manual override

2 - 4 = Use
14 = Control
12 = Return

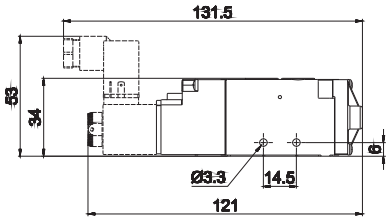

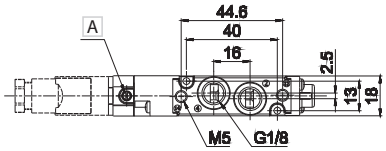

Weight (Kg): 0,168

	Symbol	Control 14	Return 12	Pressure bar	Resp. Time (ms) En.	Resp. Time (ms) De-en.	Part no.
5/2	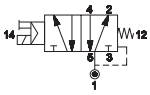	electric amplified	pneumo mechanical spring	1,9÷8	15	24	**EL18F250**
5/2	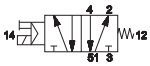	electric amplified	mechanical spring	2÷8	12	21	**EL18F251**

Double electric impulse

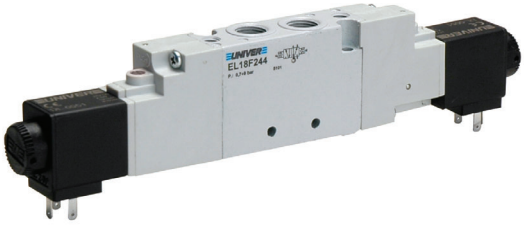

A Manual override

2 - 4 = Use
14 = Control
12 = Return

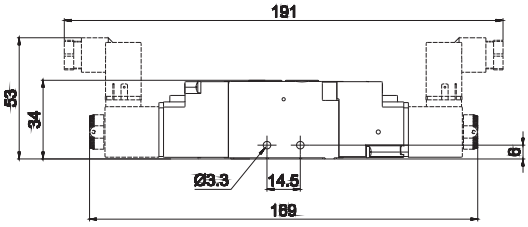

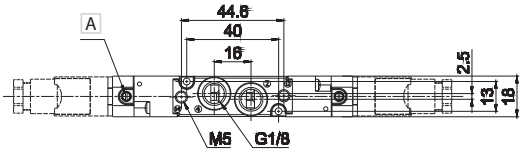

Weight (Kg): 0,192

	Symbol	Control 14	Return 12	Pressure bar	Resp. Time (ms) En.	Resp. Time (ms) De-en.	Part no.
5/2	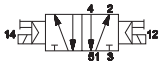	electric amplified	electric amplified	1÷8	11	11	**EL18F255**
5/3 c.c.	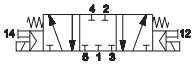	electric amplified	electric amplified	1,9÷8	11	35	**EL18F355**
5/3 o.c.	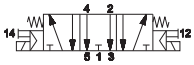	electric amplified	electric amplified	1,9÷8	11	35	**EL18F455**
5/3 p.c.	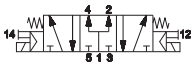	electric amplified	electric amplified	1,9÷8	11	35	**EL18F555**
3/2 NC + 3/2 NC	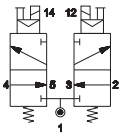	electric amplified	electric amplified	1,5÷8	14	16	**EL18F655**
3/2 NC + 3/2 NO	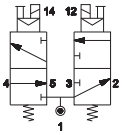	electric amplified	electric amplified	1,5÷8	14	16	**EL18F755**
3/2 NO + 3/2 NO	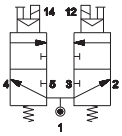	electric amplified	electric amplified	1,5÷8	14	16	**EL18F855**

c.c. = closed centres **o.c.** = open centres **p.c.** = pressurized centres

Solenoid valves are supplied without coil/connector/locking nut

Coil

DL-0050 12 V DC 2,5 W
DL-0051 24 V DC 2,5 W
DL-0106 24 V AC 50/60 Hz 5 VA
DL-0108 110 V AC 50/60 Hz 5 VA
DL-0124 230 V AC 50/60 Hz 5 VA

Connector

AM-5109

For technical characteristics see capter 5 accessories

Single pneumatic impulse

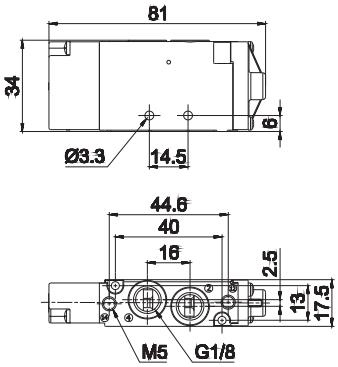

2 - 4 = Use
14 = Control
12 = Return

Weight (Kg): 0,149

	Symbol	Control	Return	Pressure	Resp. Time (ms)		Part no.
		14	12	bar	En.	De-en.	
5/2	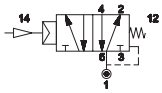	pneumatic amplified	pneumo mechanical spring	1,9÷10	11	15	**EL18F230**
5/2	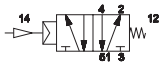	pneumatic amplified	mechanical spring	2÷10	10	14	**EL18F231**

Double pneumatic impulse

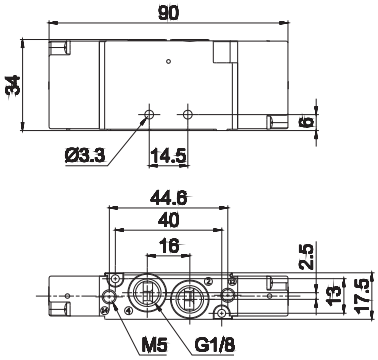

2 - 4 = Use
14 = Control
12 = Return

Weight (Kg): 0,154

	Symbol	Control	Return	Pressure	Resp. Time (ms)		Part no.
		14	12	bar	En.	De-en.	
5/2	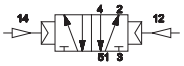	pneumatic amplified	pneumatic amplified	0,7÷10	10	10	**EL18F233**
5/3 c.c.	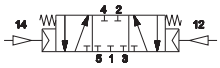	pneumatic amplified	pneumatic amplified	1,9÷10	9	21	**EL18F333**
5/3 o.c.	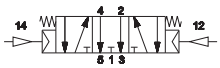	pneumatic amplified	pneumatic amplified	1,9÷10	9	21	**EL18F433**
5/3 p.c.	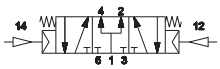	pneumatic amplified	pneumatic amplified	1,9÷10	9	21	**EL18F533**
3/2 NC + 3/2 NC	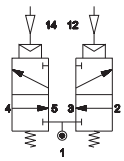	pneumatic amplified	pneumatic amplified	1,5÷10	10	14	**EL18F633**
3/2 NC + 3/2 NO	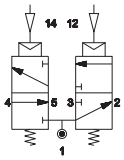	pneumatic amplified	pneumatic amplified	1,5÷10	10	14	**EL18F733**
3/2 NO + 3/2 NO	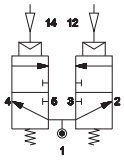	pneumatic amplified	pneumatic amplified	1,5÷10	10	14	**EL18F833**

c.c. = closed centres **o.c.** = open centres **p.c.** = pressurized centres

Modular sub-base in technopolymer

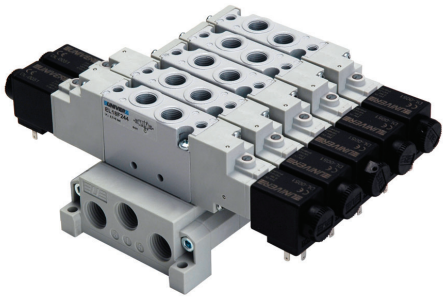

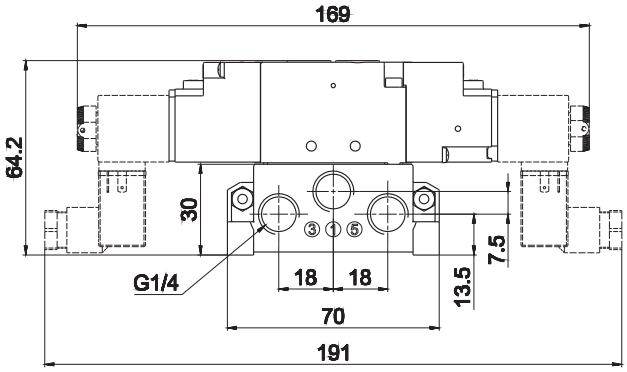

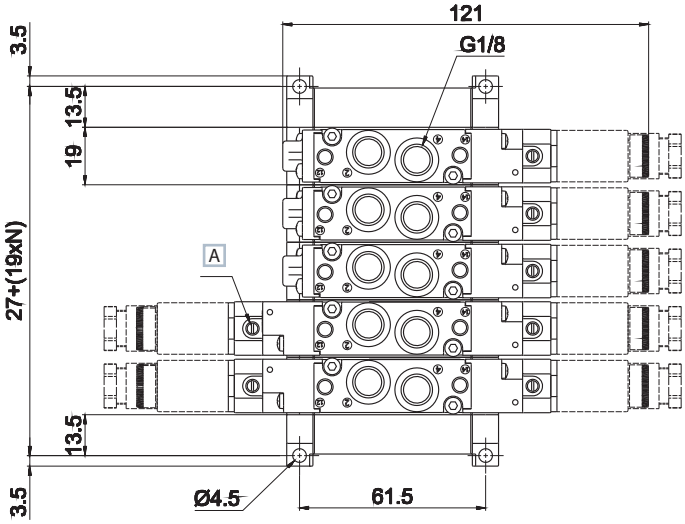

A Manual override

1 = Supply
2 - 4 = Use
3 - 5 = Exhaust
14 = Control
12 = Return

N = Number of valve places

3

EL18SF300	EL18SF515	EL18SF516	EL18SF518	EL18SF550
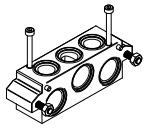	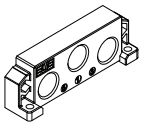	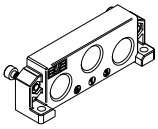		
Sub-base 1 place (screw and seals are included)	Left supply plate G1/4	Right supply plate G1/4 (screws and seals are included)	Fixing spring for DIN rail (screws are included)	Pressure separator

EL18SF560	EL18SF570
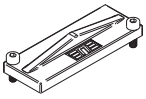	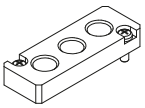
Closing plate for unused valve place (screws are included)	Intermediate supply plate (screws are included)

Subject to change

Aluminum sub-base

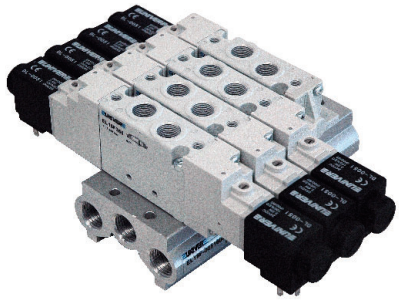

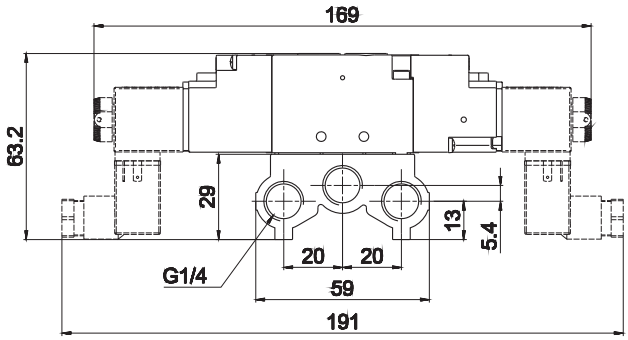

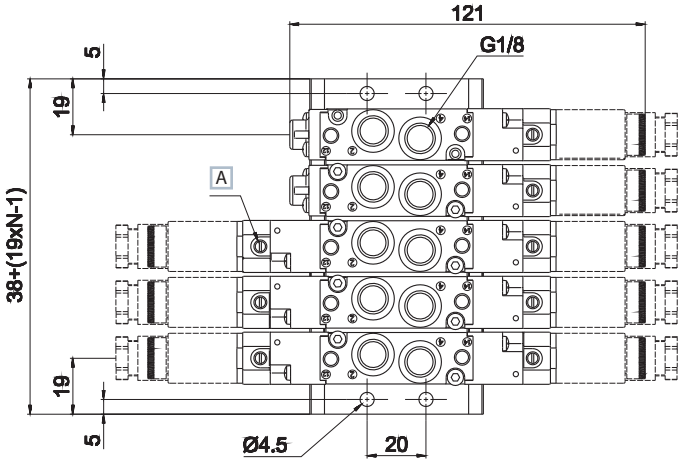

A Manual override

1 = Supply
2 - 4 = Use
3 - 5 = Exhaust
14 = Control
12 = Return

N = Number of valve places

Part No.	No. Positions
EL18SF900-02	2
EL18SF900-03	3
EL18SF900-04	4
EL18SF900-05	5
EL18SF900-06	6
EL18SF900-07	7
EL18SF900-08	8
EL18SF900-09	9
EL18SF900-10	10

The sub-base includes gaskets and screws for mounting valves

EL18SF560

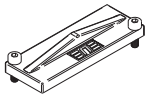

Closing plate for unused valve place (screws are included)

EL22F

ESSENTIAL valves 22 mm - G1/4

High flow rate:1700 Nl/min
Reduced dimensions: 22 mm
Complete solution: 5/2 - 5/3 - 3/2+3/2
Strong: Metallic body

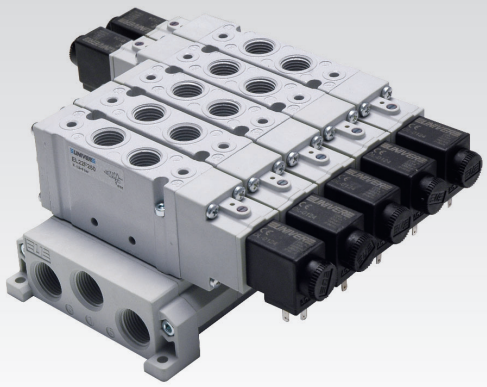

Available ATEX version upon request

II 3 GD c nA II T5 - 10°C ≤ Ta ≤ 45°C

TECHNICAL CHARACTERISTICS

Ambient temperature	-5 ÷ 50 °C
Fluid temperature	Max 50 °C
Fluid	10 µm filtered air, with or without lubrication
Commutation system	spool
Ways/Positions	5/2 - 5/3 - 3/2+3/2
Max Pressure	8 bar (electric control) 10 bar (pneumatic control)
Control	electro, pneumatic
Return	mechanical spring, pneumomechanical spring
Connections	G1/4
Nominal flow rate (Nl/min)	**1700** (5/2) **1450** (5/3) **1450** (3/2+3/2)

CONSTRUCTIVE CHARACTERISTICS

Valve body	aluminium
Seals	nitrile rubber (NBR)
Actuators	aluminium
Sub-base	technopolymer, aluminium
Spool	aluminium

ELECTRIC CHARACTERISTICS

Electropilot	U6
Coil	DL series 15 mm
Voltage	12 V DC - 24 V DC - 24 V AC - 110 V AC - 230 V AC
Power consumption	2,5 W 5 VA
Protection degree	IP65
Manual override	impulse 1-2 positions

CODIFICATION KEY

E	L	2	2	F	2	5	0		
1					2	3	4	5	6

1 Series

EL22F = ESSENTIAL Valves 22 mm - G1/4

2 Type

2 = 5/2
3 = 5/3 **c.c.**
4 = 5/3 **o.c.**
5 = 5/3 **p.c.**
6 = 3/2+3/2 NC-NC
7 = 3/2+3/2 NC-NO
8 = 3/2+3/2 NO-NO

3 Control 14

3 = Pneumatic amplified
5 = Electrical amplified DC/AC

4 Return 12

0 = Pneumomechanical spring
1 = Mechanical spring
3 = Pneumatic amplified
5 = Electrical amplified DC/AC

5 Option

D = External servo-assistance of the pilot

6 ATEX Option

X = Atex (upon request)

See ATEX Catalogue for types and versions

c.c. = closed centres **o.c.** = open centres **p.c.** = pressurized centres

Single electric impulse

A Manual override

2 - 4 = Use
14 = Control
12 = Return

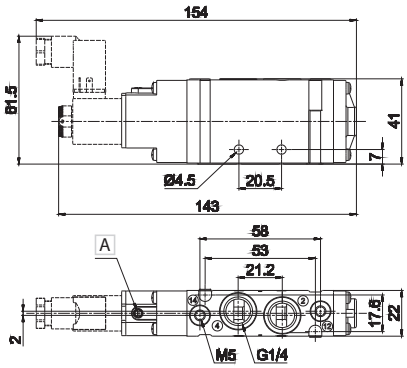

Weight (Kg): 0,208

	Symbol	Control 14	Return 12	Pressure bar	Resp. Time (ms) En.	Resp. Time (ms) De-en.	Part no.
5/2	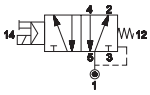	electric amplified	pneumo mechanical spring	1,5÷9	15	24	**EL22F250**
5/2	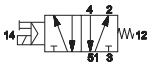	electric amplified	mechanical spring	1,9÷9	12	21	**EL22F251**

Double electric impulse

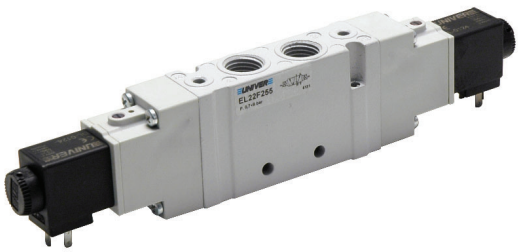

A Manual override

2 - 4 = Use
14 = Control
12 = Return

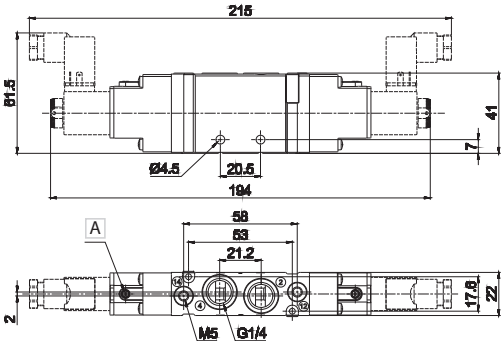

Weight (Kg): 0,210

	Symbol	Control 14	Return 12	Pressure bar	Resp. Time (ms) En.	Resp. Time (ms) De-en.	Part no.
5/2	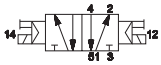	electric amplified	electric amplified	1,5÷9	16	16	**EL22F255**
5/3 c.c.	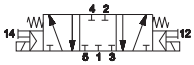	electric amplified	electric amplified	1,9÷9	11	35	**EL22F355**
5/3 o.c.	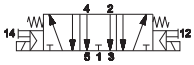	electric amplified	electric amplified	1,9÷9	11	35	**EL22F455**
5/3 p.c.	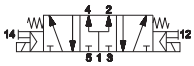	electric amplified	electric amplified	1,9÷9	11	35	**EL22F555**
3/2 NC + 3/2 NC	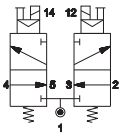	electric amplified	electric amplified	1,5÷9	14	16	**EL22F655**
3/2 NC + 3/2 NO	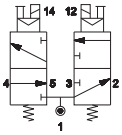	electric amplified	electric amplified	1,9÷9	14	16	**EL22F755**
3/2 NO + 3/2 NO	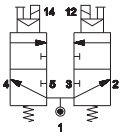	electric amplified	electric amplified	1,9÷9	14	16	**EL22F855**

c.c. = closed centres **o.c.** = open centres **p.c.** = pressurized centres

Solenoid valves are supplied without coil/connector/locking nut

Coil

DL-0050 12 V DC 2,5 W
DL-0051 24 V DC 2,5 W
DL-0106 24 V AC 50/60 Hz 5 VA
DL-0108 110 V AC 50/60 Hz 5 VA
DL-0124 230 V AC 50/60 Hz 5 VA

Connector

AM-5109

For technical characteristics see capter 5 accessories

Single pneumatic impulse

2 - 4 = Use
14 = Control
12 = Return

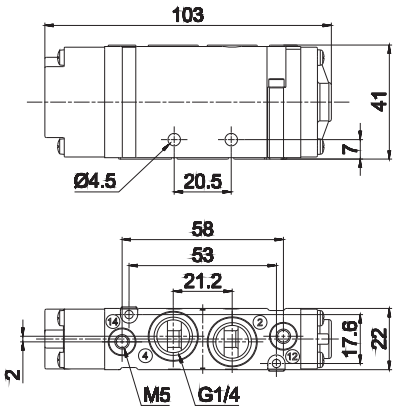

Weight (Kg): 0,042

	Symbol	Control 14	Return 12	Pressure bar	Resp. Time (ms) En.	Resp. Time (ms) De-en.	Part no.
5/2	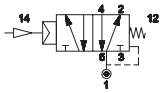	pneumatic amplified	pneumo mechanical spring	1,9÷10	11	15	**EL22F230**
5/2	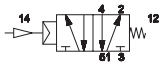	pneumatic amplified	mechanical spring	2÷10	10	14	**EL22F231**

Double pneumatic impulse

2 - 4 = Use
14 = Control
12 = Return

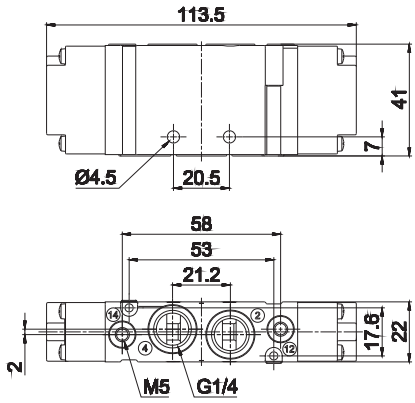

Weight (Kg): 0,044

	Symbol	Control 14	Return 12	Pressure bar	Resp. Time (ms) En.	Resp. Time (ms) De-en.	Part no.
5/2	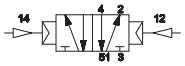	pneumatic amplified	pneumatic amplified	0,7÷10	10	10	**EL22F233**
5/3 c.c.	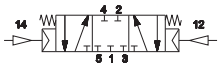	pneumatic amplified	pneumatic amplified	1,6÷10	9	21	**EL22F333**
5/3 o.c.	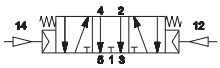	pneumatic amplified	pneumatic amplified	1,6÷10	9	21	**EL22F433**
5/3 p.c.	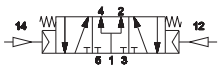	pneumatic amplified	pneumatic amplified	1,6÷10	9	21	**EL22F533**
3/2 NC + 3/2 NC	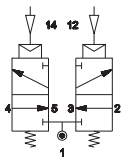	pneumatic amplified	pneumatic amplified	1,3÷10	10	14	**EL22F633**
3/2 NC + 3/2 NO	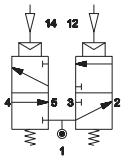	pneumatic amplified	pneumatic amplified	1,3÷10	10	14	**EL22F733**
3/2 NO + 3/2 NO	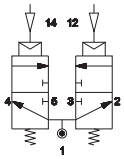	pneumatic amplified	pneumatic amplified	1,3÷10	10	14	**EL22F833**

c.c. = closed centres **o.c.** = open centres **p.c.** = pressurized centres

Modular sub-base in technopolymer

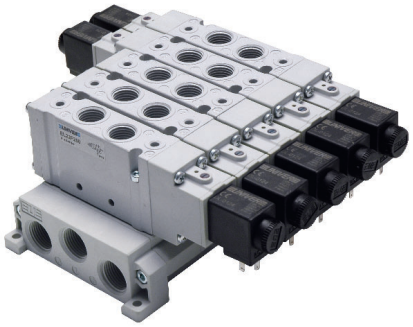

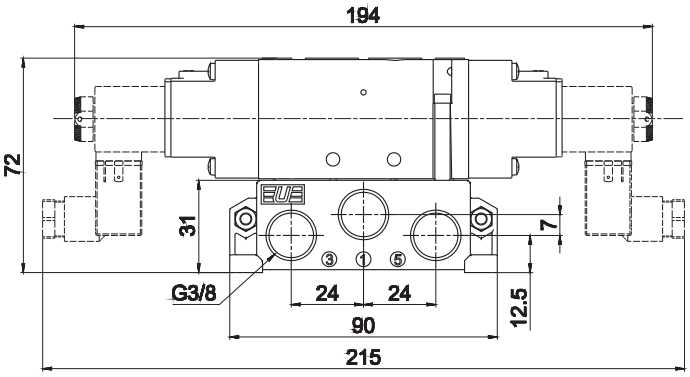

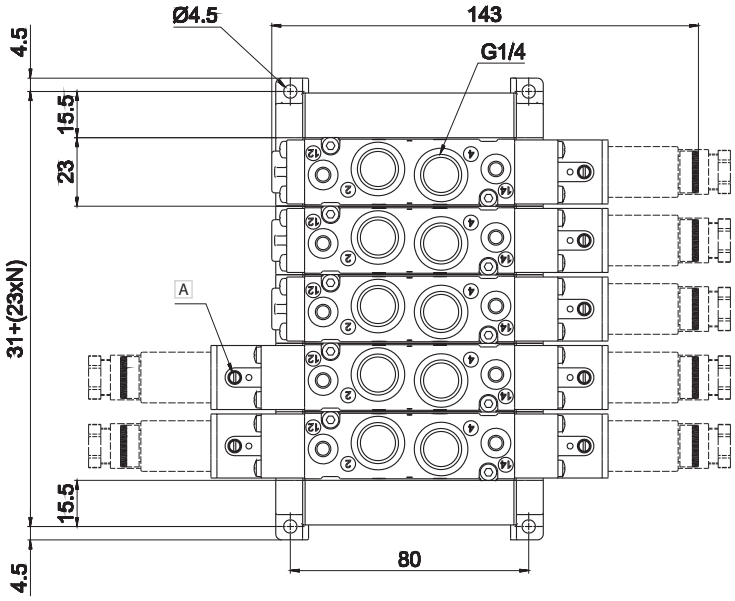

A Manual override

1 = Supply
2 - 4 = Use
3 - 5 = Exhaust
14 = Control
12 = Return

N = Number of valve places

EL22SF300	EL22SF515	EL22SF516	EL18SF518	EL22SF550
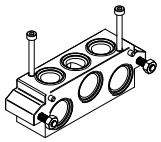	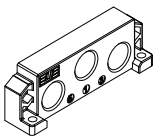	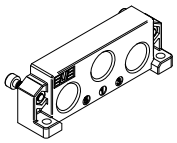		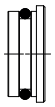
Sub-base 1 place (screws and seals are included)	Left supply plate G3/8	Right supply plate G3/8 (screws and seals are included)	Fixing spring for DIN rail (screws are included)	Pressure separator

EL22SF560	EL22SF570
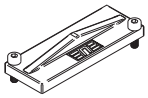	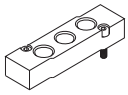
Closing plate for unused valve place (screws are included)	Intermediate supply plate (screws are included)

Aluminum sub-base

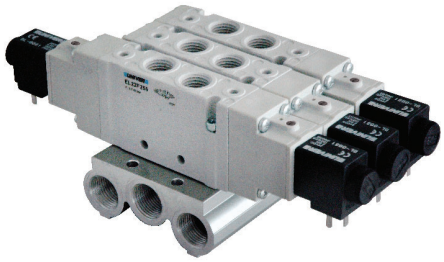

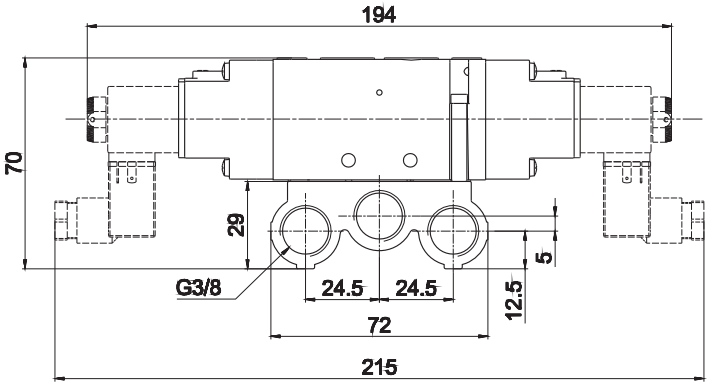

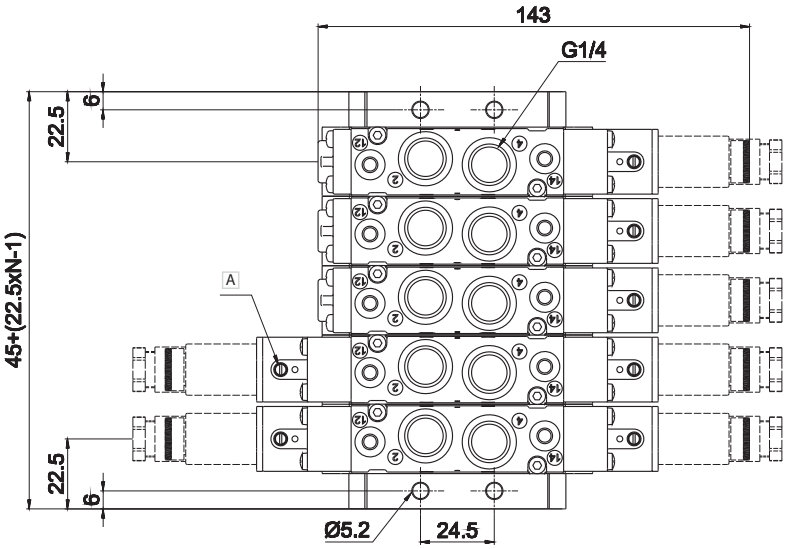

A Manual override

1 = Supply
2 - 4 = Use
3 - 5 = Exhaust
14 = Control
12 = Return

N = Number of valve places

Part No.	No. Positions
EL22SF900-02	2
EL22SF900-03	3
EL22SF900-04	4
EL22SF900-05	5
EL22SF900-06	6
EL22SF900-07	7
EL22SF900-08	8
EL22SF900-09	9
EL22SF900-10	10

The sub-base includes gaskets and screws for mounting valves

EL22SF560

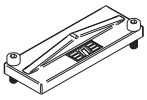

Closing plate for unused valve place (screws are included)

COILS

U04 - U05 - U06 - U1 - U2 - U3 Coils and Connectors

Available ATEX version upon request

CE Ex II 3 GD c nA II T5 - 10°C ≤ Ta ≤ 45°C

COUPLING TABLE - COILS /ELECTROPILOTS - ELECTROPILOTS/SOLENOID VALVES			Electropilots						
			A (U05)	B (U04)	AA(U1)	AA(U3)		AB (U2)	
Coils	U04	10 mm		■					
	U05	15 mm	■						
	U1	22 mm			■				
	U2	30 mm						■	■
	U3	30 mm				■	■		
Solenoid valves	BE	ISO 1- ISO 2 ISO 3 - ISO 4	■				■		R
	AE	ISO 1 ISO 2			■	■			
	BD	ISO 01 26 mm ISO 02 18 mm	■						
	AC-N	NAMUR interface			■	■			
	CL CM	G1/8 G1/4			■	■			
	COMPA 2/4		■						
	G6 GL6	G1/8 sub-base	■	■					
	G7	G1/8	R		■	■			
	AC	G1/8 - G1/4			■	■			
		G1/2			R	R		■	
	AF	G1/8			■	■			
		G1/4 - G3/8			■	■		■	
		G1/2 ÷ G1			R	R		■	
		G1 1/2							■
	AG	G1/8			■	■			
		G1/4 ÷ G1			R	R		■	
		G1 1/2							■

■ = Standard R = Upon request

U04 coil with integrated 90° upward connector

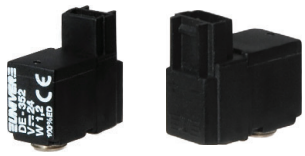

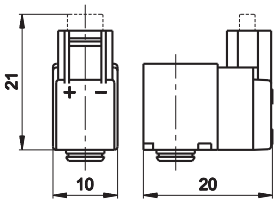

Duty cycle ED (a)	Power consumption W		Tension tolerance	Rated voltage	Weight	Part no.	Connector
%	Hold	Inrush	%		Kg		
100	1,2	1,2	±10	24 V DC	0,013	**DE-352**	**D-500** **D-530-...** **D-535-...**
100	0,5	0,5	±10	24 V DC	0,013	**DE-355**	
100	1,35	1,35	±10	24 V DC	0,013	**DE-452**	

Upon request 12 VDC

U04 coil with in-line connector

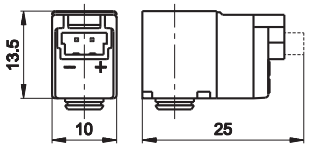

Duty cycle ED (a)	Power consumption W		Tension tolerance	Rated voltage	Weight	Part no.	Connector
%	Hold	Inrush	%		Kg		
100	1,2	1,2	±10	24 V DC	0,013	**DE-552**	**D-500** **D-530-...** **D-535-...**
100	0,5	0,5	±10	24 V DC	0,013	**DE-555**	
100	1,35	1,35	±10	24 V DC	0,013	**DE-652**	

Upon request 12 VDC

3

U04 coil with loose cables (length 300 mm)

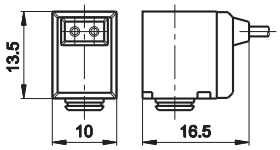

Duty cycle ED (a)	Power consumption W		Tension tolerance	Rated voltage	Weight	Part no. (b)
%	Hold	Inrush	%		Kg	
100	1,2	1,2	±10	24 VDC	0,013	**DE-052L030**

Upon request 12 VDC

U04 coil with in-line connector with protecting cover for complete tightness

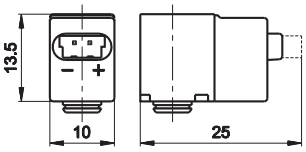

Duty cycle ED (a)	Power consumption W		Tension tolerance	Rated voltage	Weight	Part no.	Connector
%	Hold	Inrush	%		Kg		
100	1,35	1,35	±10	12 V DC	0,013	**DE-642I**	**D-500** **D-530-...** **D-535-...**
100	1,35	1,35	±10	24 V DC	0,013	**DE-652I**	
100	0,5	0,5	±10	24 V DC	0,013	**DE-655I**	

(a) = under continuous service a maximum temperature will not compromise the functioning of the coil provided that the working position is ventilated
(b) = different wire lengths are available upon request

U05 coil with integrated 90° upward connector

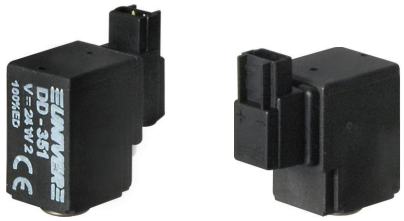

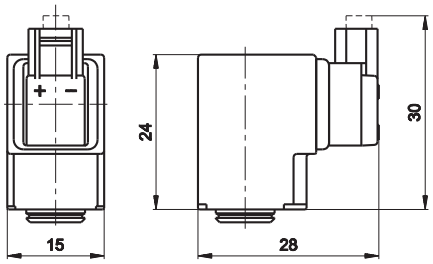

Duty cycle ED (a)	Power consumption W		Tension tolerance	Rated voltage	Weight	Part no.	Connector
%	Hold	Inrush	%		Kg		
100	2	2	±10	24 V DC	0,019	**DD-351**	**D-500** **D-530-...** **D-535-...**

U05 coil with integrated 90° downward connector

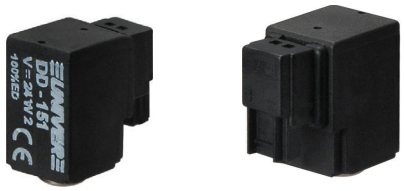

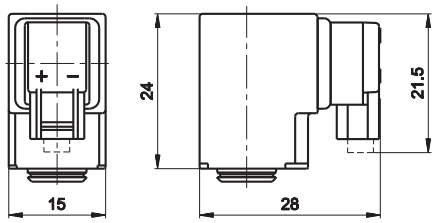

Duty cycle ED (a)	Power consumption W		Tension tolerance	Rated voltage	Weight	Part no.	Connector
%	Hold	Inrush	%		Kg		
100	2	2	±10	24 V DC	0,019	**DD-151**	**D-500** **D-530-...** **D-535-...**

U05 coil with in-line connector

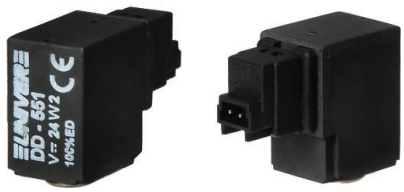

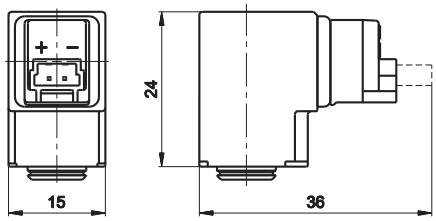

Duty cycle ED (a)	Power consumption W		Tension tolerance	Rated voltage	Weight	Part no.	Connector
%	Hold	Inrush	%		Kg		
100	2	2	±10	24 V DC	0,019	**DD-551**	**D-500** **D-530-...** **D-535-...**

Upon request: version with LED and V DC version

U05 coil with loose cables (length 300 mm)

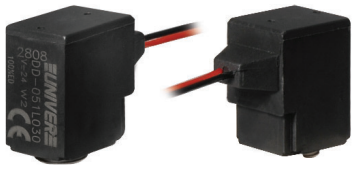

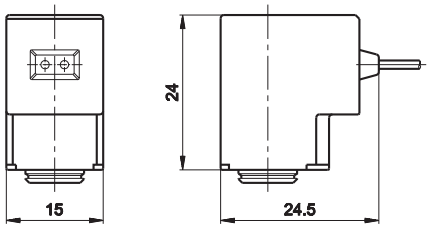

Duty cycle ED (a)	Power consumption W		Tension tolerance	Rated voltage	Weight	Part no. (b)
%	Hold	Inrush	%		Kg	
100	1,5	1,5	±10	12 V DC	0,019	**DD-051L030**
100	2	2	±10	24 V DC	0,019	**DD-052L030**

(a) = under continuous service a maximum temperature will not compromise the functioning of the coil provided that the working position is ventilated
(b) = different wire lengths are available upon request

U05 15 mm coil - Faston

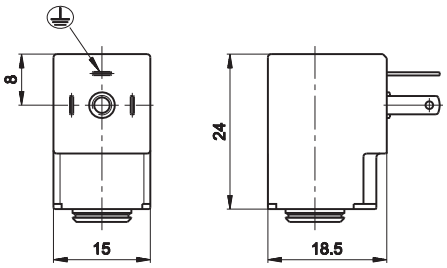

Duty cycle ED(a)	Power consumption W				Tolerance		Rated voltage		Frequency	Weight	Part no.	Connector
%	DC W		AC VA		tension %		DC	AC	HZ	Kg		
	Hold	Inrush	Hold	Inrush	DC	AC						
100	-	-	3,5	-	-	±10	-	24	50/60	0,019	DD-011	AM-5109
100	-	-	3,5	-	-	±10	-	230	50/60	0,019	DD-013	
100	-	-	2,3	3,2	±10	±10	-	24	50/60	0,019	DD-040	
100	2	2	-	-	±10	-	12	-	-	0,019	DD-041	
100	2,5	2,5	-	-	±10	±10	12	-	-	0,019	DD-042	
100	-	-	2,3	3,2	±10	-	-	48	50/60	0,019	DD-050	
100	2	2	-	-	±10	±10	24	-	-	0,019	DD-051	
100	2,5	2,5	-	-	±10	-	24	-	-	0,019	DD-052	
100	-	-	-	-	±10	±10	-	110	50/60	0,019	DD-060	
100	-	-	2,3	3,2	±10	-	-	230	50/60	0,019	DD-070	

U06 15 mm coil

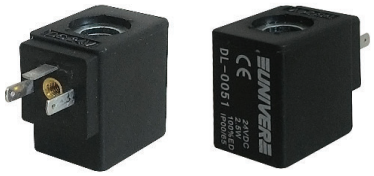

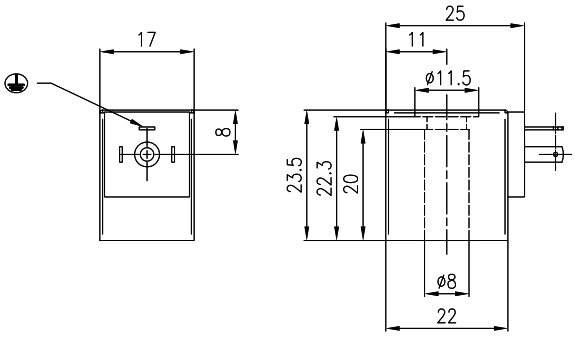

Duty cycle ED(a)	Power consumption W		Tension tolerance	Rated voltage	Weight	Part no.
%	Hold	Inrush	%		Kg	
100	2,5	2,5	±10	12 V DC	0,08	DL-0050
100	2,5	2,5	±10	24 V DC	0,08	DL-0051
100	3,3 VA (Max)	5 VA (Max)	±10	24 V AC 50/60 Hz 5 VA	0,08	DL-0106
100	3,3 VA (Max)	5 VA (Max)	±10	110 V AC 50/60 Hz 5 VA	0,08	DL-0108
100	3,3 VA (Max)	5 VA (Max)	±10	230 V AC 50/60 Hz 5 VA	0,08	DL-0124

Connectors for U04, U05 and U06 coils

	Length (mm)	Coil	Part no.
MINIATURE CONNECTOR WITHOUT WIRES			
	-	U04/U05	D-500
MINIATURE CONNECTOR WITH LOOSE CABLES			
	300	U04/U05	D-530-30
	500	U04/U05	D-530-50
	2000	U04/U05	D-530-200
MINIATURE CONNECTOR WITH CABLE			
	300	U04/U05	D-535-30
	500	U04/U05	D-535-50
	2000	U04/U05	D-535-200

CAUTION! Do not invert the polarity when connecting the coil with LED.

15 mm connector

	-	U05/U06	AM-5109

Protection according to IP65. PG9 cable connection. 180° rotation on the coil.

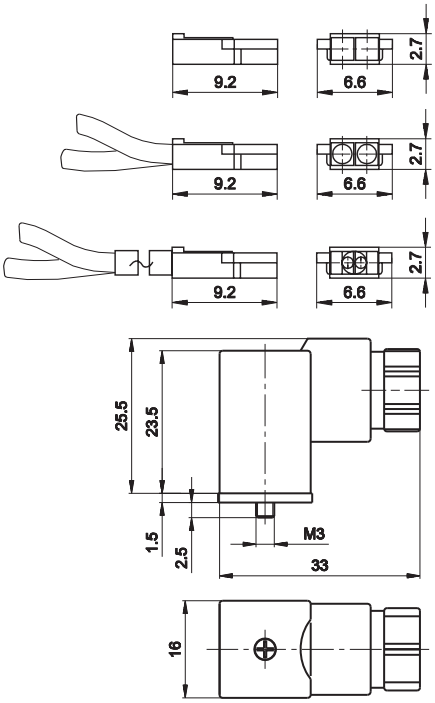

Upon request version with LED:
(a) = 110V - 230V solenoid valves must be built-in (EN-60204-1)
Under continuous service a maximum temperature will not compromise the functioning of the coil provided that the working position is ventilated

For version CSA/UL see related section

Possibility of replacement without intervention in the pneumatic circuit
Other voltages available upon request
360° rotation on the pilot. Coil winding: H class
Ambient temperature: -10 ÷ +45 °C. Fluid temperature: -10 ÷ +95 °C.
The solenoid valves functioning with 100V-230V must be incorporated (EN60204-1)
Under continuous service a maximum temperature will not compromise the functioning of the coil provided that the working position is ventilated.
Protection class IP65, if used with connector.

U1 22 mm coil to be used with U1 electropilot

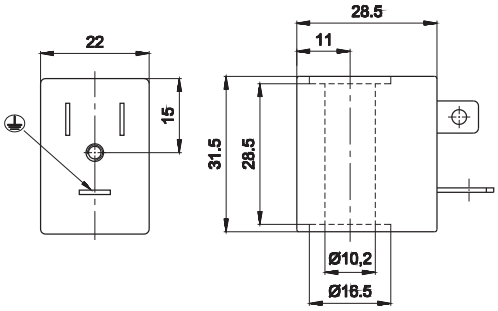

Duty cycle ED(a)	Power consumption W		Tolerance tension	Rated voltage	Weight	Part no.
%	Hold	Inrush	%		Kg	
100	3,5	3,5	±10	12 V DC	0,06	**DA-0050**
100	3,5	3,5	±10	24 V DC	0,06	**DA-0051**
100	5,4 VA (Max)	7,8 VA (Max)	±10	24 V AC/50-60 HZ	0,06	**DA-0106**
100	5,4 VA (Max)	7,8 VA (Max)	±10	110 V AC/50-60 HZ	0,06	**DA-0108**
100	5,4 VA (Max)	7,8 VA (Max)	±10	230 V AC/50-60 HZ	0,06	**DA-0124**

U2 30 mm coil to be used with U2 electropilot

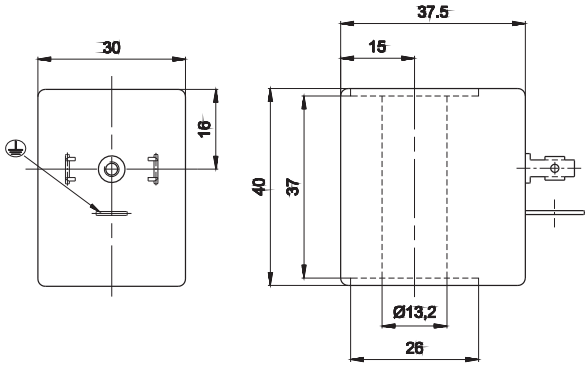

Duty cycle ED(a)	Power consumption W		Tension tolerance	Rated voltage	Weight	Part no.
%	Hold	Inrush	%		Kg	
100	11	11	±10	12 V DC	0,10	**DB-0501**
100	11	11	±10	24 V DC	0,10	**DB-0502**
100	10 VA (Max)	16 VA (Max)	±10	24 V AC/50-60 HZ	0,10	**DB-0507**
100	10 VA (Max)	16 VA (Max)	±10	110 V AC/50-60 HZ	0,10	**DB-0509**
100	10 VA (Max)	16 VA (Max)	±10	230 V AC/50-60 HZ	0,10	**DB-0510**

U3 30 mm coil to be used with U1 electropilot

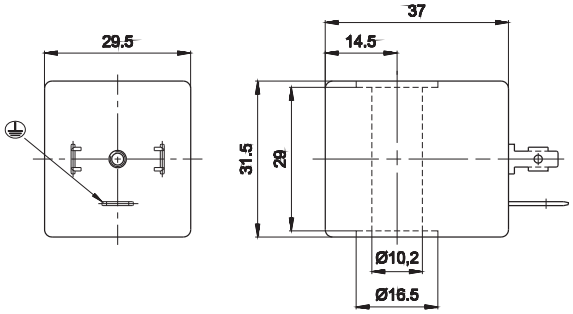

Duty cycle ED(a)	Power consumption W		Tension tolerance	Rated voltage	Weight	Part no.
%	Hold	Inrush	%		Kg	
100	2,5	2,5	±10	12 V DC	0,08	**DC-0301**
100	2,5	2,5	±10	24 V DC	0,08	**DC-0302**
100	3,3 VA (Max)	5 VA (Max)	±10	24 V AC/50-60 HZ	0,08	**DC-0307**
100	3,3 VA (Max)	5 VA (Max)	±10	110 V AC/50-60 HZ	0,08	**DC-0309**
100	3,3 VA (Max)	5 VA (Max)	±10	230 V AC/50-60 HZ	0,08	**DC-0310**

(a) = 110V - 230V solenoid valves must be built-in (EN-60204-1)
Under continuous service a maximum temperature will not compromise the functioning of the coil provided that the working position is ventilated

Connector for U1 coil

	Coil	Part no.
CONNECTOR		
	U1	**AM-5110**

Protection according to IP 65. PG9 cable connection. 180° rotation on the coil
LED available upon request.

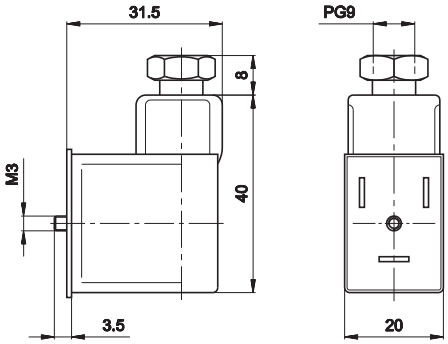

Connector for U2, U3 coil

	Coil	Part no.
DIN 43650 CONNECTOR		
	U2/U3	**AM-5111**

Protection according to IP 65. PG9 cable connection. 360° rotation on the coil.
LED available upon request.

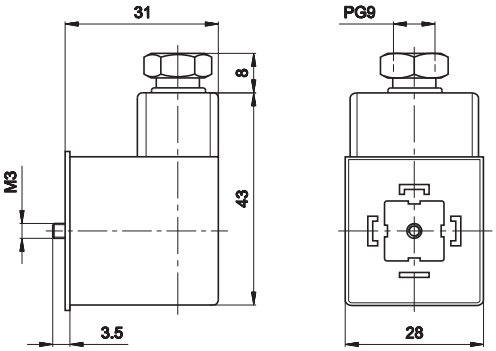

3

OPERATORS

Manual, pneumatic and mechanical operators for screw and panel mounting

Modular system actuators/buttons

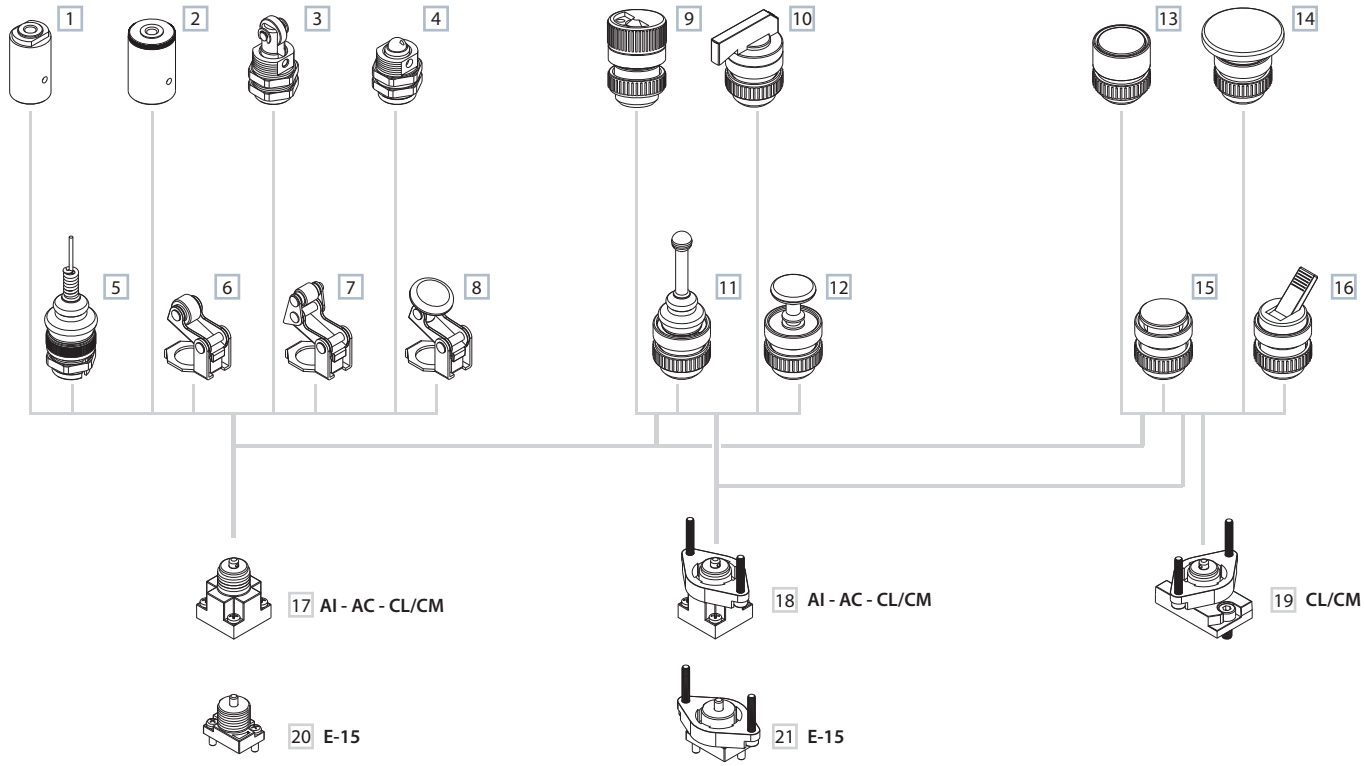

PNEUMATIC / MECHANICAL ACTUATORS

1 Pneumatic actuator
2 Amplified pneumatic actuator
3 Roller operator 1 position
4 Ball-push operator 1 position
5 Omni-directional antenna 1 position
6 Roller lever operator 1 position
7 Articulated roller lever operator 1 position
8 Key operator 1 position

MANUAL ACTUATORS

9 Rotating selector
10 Rotating lever selector
11 Omni-directional operator
12 Push-pull operator
13 Recessed button
14 Head button
15 Button
16 Lever

OVERRIDE

17 Threaded indirect operation
18 Indirect panel operation
19 Direct panel operation
20 Ball-push direct operation
21 Ball-push direct panel operation

Recessed button

Symbol	Colour	Force (a) N	Weight Kg	Part no.
1 POSITION				
	black	16	0,031	AI-3511
	red	16	0,031	AI-3512
	green	16	0,031	AI-3513
FOR PANEL MOUNTING 1 POSITION (b)				
	black	16	0,031	AI-3511Q
	red	16	0,031	AI-3512Q
	green	16	0,031	AI-3513Q

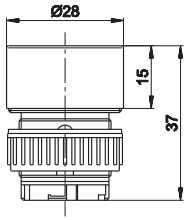

Head button

Symbol	Colour	Force (a) N	Weight Kg	Part no.
1 POSITION				
	red	16	0,022	AI-3514
	black	16	0,022	AI-3516
FOR PANEL MOUNTING 1 POSITION (b)				
	red	16	0,022	AI-3514Q
	black	16	0,022	AI-3516Q
2 POSITIONS				
	red	16	0,022	AI-3514D
	black	16	0,022	AI-3516D
FOR PANEL MOUNTING 2 POSITIONS (b)				
	red	16	0,022	AI-3514QD
	black	16	0,022	AI-3516QD

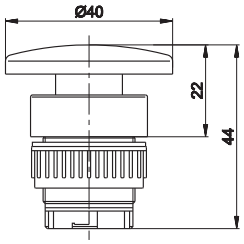

Button

Symbol	Colour	Force (a) N	Weight Kg	Part no.
1 POSITION				
	green	12,5	0,025	AI-3515
	red	12,5	0,025	AI-3517
	black	12,5	0,025	AI-3519
FOR PANEL MOUNTING 1 POSITION (b)				
	green	12,5	0,025	AI-3515Q
	red	12,5	0,025	AI-3517Q
	black	12,5	0,025	AI-3519Q

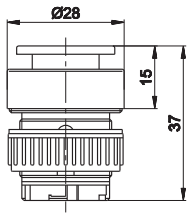

Lever operator

Symbol	Colour	Force (a) N	Weight Kg	Part no.
2 POSITIONS				
	black	6	0,022	AI-3524
FOR PANEL MOUNTINGS 2 POSITIONS (b)				
	black	6	0,022	AI-3524Q

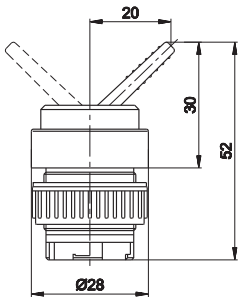

Rotating selector for accident prevention

Symbol	Colour	Force (a) N	Weight Kg	Part no.
WITH LIGHT 1 POSITION				
	black	12,5	0,025	AI-3521
FOR PANEL MOUNTING WITH LIGHT 1 POSITION (b)				
	black	12,5	0,025	AI-3521Q
WITH LIGHT 2 POSITIONS				
	black	12,5	0,025	AI-3520
FOR PANEL MOUNTING WITH LIGHT 2 POSITIONS (b)				
	black	12,5	0,025	AI-3520Q

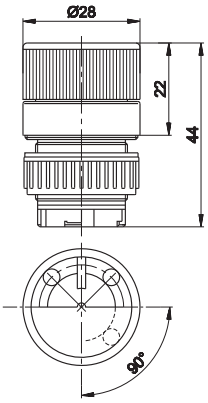

(a) = force at 6 bar with actuators assembled on AI-35.. standard limit switch
(b) = to be used with valves preset with flange for panel mounting

Rotating lever selector

Symbol	Colour	Force (a) N	Weight Kg	Part no.
WITH LIGHT 1 POSITION				
	black ■	12,5	0,025	**AI-3523**
FOR PANEL MOUNTING WITH LIGHT 1 POSITION (b)				
	black ■	12,5	0,025	**AI-3523Q**
WITH LIGHT 2 POSITIONS				
	black ■	12,5	0,025	**AI-3522**
FOR PANEL MOUNTING WITH LIGHT 2 POSITIONS (b)				
	black ■	12,5	0,025	**AI-3522Q**

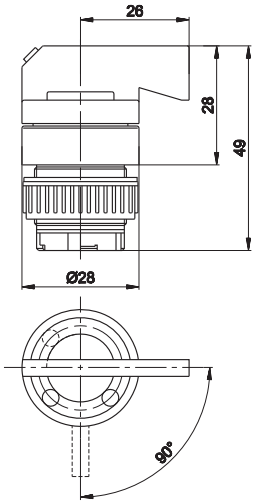

Omni-directional operator

Symbol	Colour	Force (a) N	Weight Kg	Part no.
WITH CENTRE RETURN 1 POSITION				
	black ■	7	0,029	**AI-3525**
FOR PANEL MOUNTING WITH CENTRE RETURN 1 POSITION (b)				
	black ■	7	0,029	**AI-3525Q**

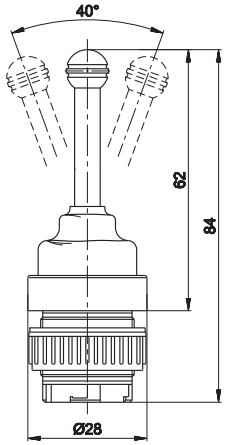

Push-pull operator

Symbol	Colour	Force (a) N	Weight Kg	Part no.
2 POSITIONS				
	black ■	16	0,029	**AI-3526**
FOR PANEL MOUNTING 2 POSITIONS (b)				
	black ■	16	0,029	**AI-3526Q**

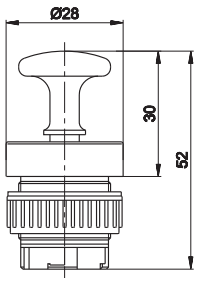

(a) = force at 6 bar with actuators assembled on AI-35..standard limit switch
(b) = to be used with valves preset with flange for panel mounting

Reducer

AI-3529

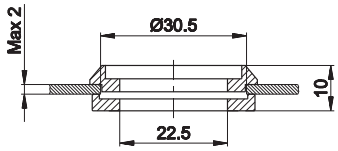

reducer for Ø 30,5 to Ø 22,5, to be used with AI-35..Q limit switches
(for details refer to next page)

Assembly examples

Manual actuators for screw mounting (ring nut)

Panel mounting for Ø 22,5 bore sizes

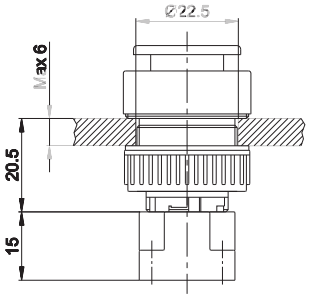

Panel mounting for Ø 30,5 bore sizes
with reducer AI_3529

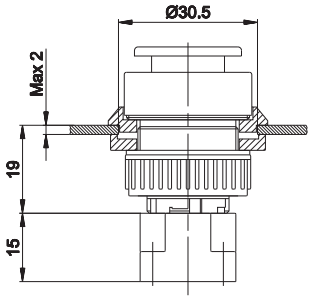

Manual actuators for panel mounting (ring nut+screws)

Panel mounting for Ø 22,5 bore sizes

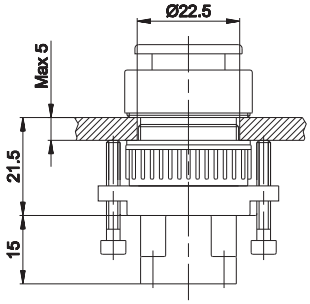

Pneumatic operator

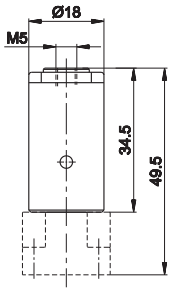

Symbol	Control pressure bar	Operating pressure bar	Weight Kg	Part no.
	1,9÷2,7	1÷9	0,020	**AI-3550**

Amplified pneumatic operator

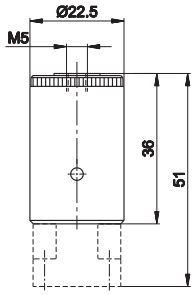

Symbol	Control pressure bar	Operating pressure bar	Weight Kg	Part no.
	0,6÷0,9	1÷9	0,030	**AI-3551**

Roller operator

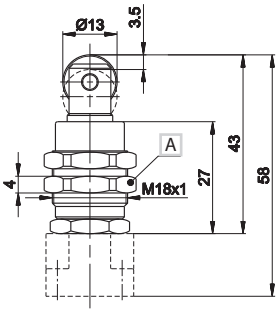

A Wrench 20

Symbol	Force (a) N	Weight Kg	Part no.
WITH DUST PROTECTION			
	-	0,031	**AI-3560**

Ball-push operator

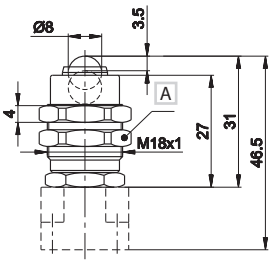

A Wrench 20

Symbol	Force (a) N	Weight Kg	Part no.
WITH DUST PROTECTION			
	26	0,023	**AI-3562**

Omni-directional antenna

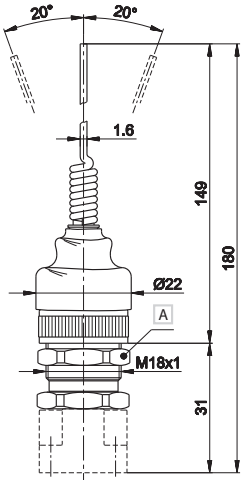

A Wrench 20

Symbol	Force (a) N	Weight Kg	Part no.
1 POSITION WITH CENTRE RETURN			
	3,3	0,034	**AI-3563**

(a) = force at 6 bar with actuators assembled on AI-35..standard limit switch

Roller lever operator

A Max opening
B Total stroke

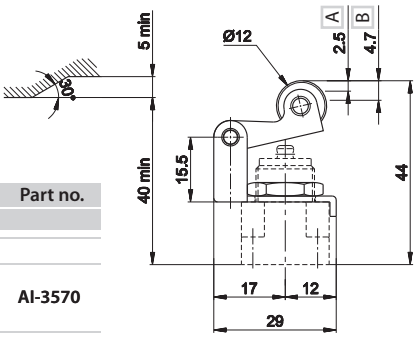

Symbol	Force (a) N	Weight Kg	Part no.
1 POSITION			
	10	0,021	**AI-3570**

Articulated roller operator

A Max opening
B Total stroke

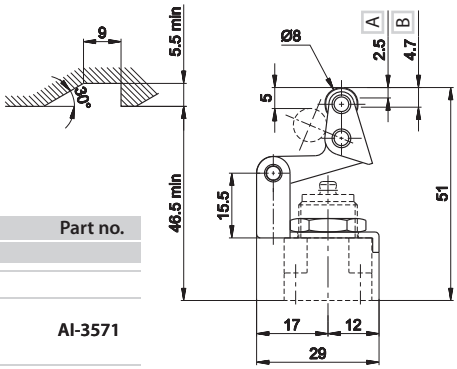

Symbol	Force (a) N	Weight Kg	Part no.
1 POSITION			
	10	0,021	**AI-3571**

Key operator

A Max opening
B Total stroke

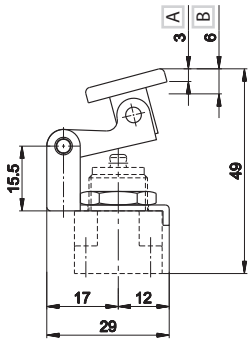

Symbol	Force (a) N	Weight Kg	Part no.
1 POSITION			
	10	0,021	**AI-3572**

(a) = force at 6 bar with actuators assembled on AI-35..

YR240

Brass ball valve 2/2 with rotary actuator

- Full-bore ball valve
- Anti-blowout stem
- Top-flange according to DIN-ISO 5211

TECHNICAL CHARACTERISTICS

Temperature	-20 ÷ 120 °C
Fluid	air, water, etc
Working pressure	Max PN 40
Thread ends	GAS UNI 338 - ISO R/228 - DIN 259 - BSPP
Rotary angle	90°
Flow direction	both directions

CONSTRUCTIVE CHARACTERISTICS

Body	hot pressed brass (1)
End cap	hot pressed brass (2)
Ball	chromium-plated brass (3)
Seat ring	P.T.F.E. (4)
Piston rod	brass (5)
Piston rod ring	viton (6)

CODIFICATION KEY

Y	R	2	4	0	0	1	0	D	A
1					2			3	

1 Series	2 Size	3 Version
YR240 = Brass ball valve 2/2 with rotary actuator	**008** = 8 mm **010** = 10 mm **015** = 15 mm **020** = 20 mm **025** = 25 mm **032** = 32 mm **040** = 40 mm **050** = 50 mm **065** = 65 mm **080** = 80 mm **100** = 100 mm	**DA** = double acting **SR** = single acting

Pressure - temperature diagram

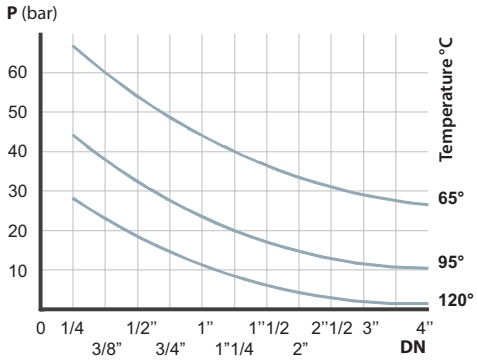

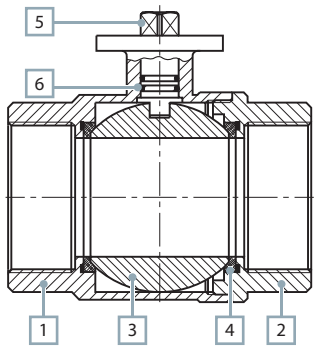

Double acting/single acting

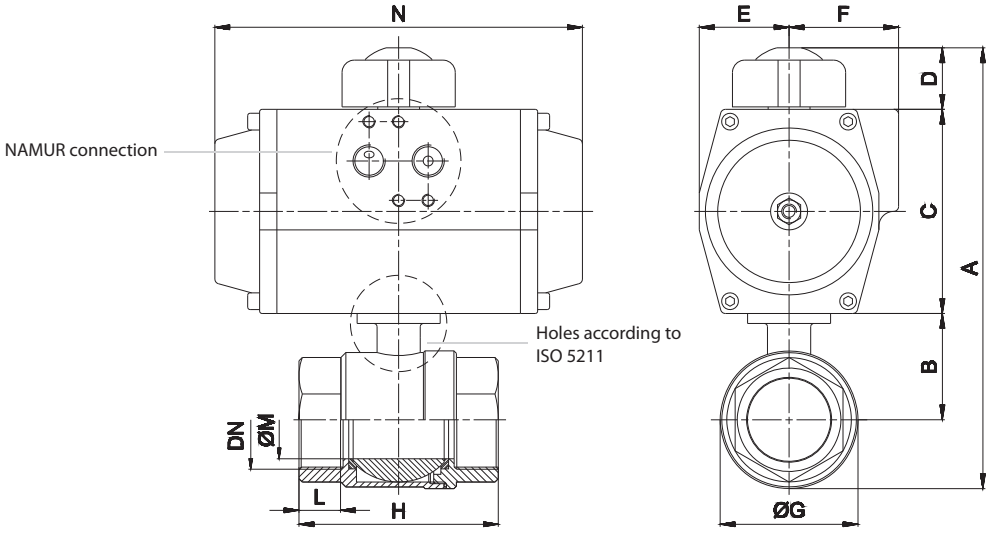

Double acting

Ø	DN	A	B	C	D	E	F	ØG	H	L	ØM	N	Part no.
8	G 1/4	114	29	45	24	22,5	22,5	32	65	17	15	142	YR240008DA
10	G 3/8	114	29	45	24	22,5	22,5	32	65	17	15	142	YR240010DA
15	G 1/2	136	29	67	24	30	41	32	65	17	15	142	YR240015DA
20	G 3/4	143	32	67	24	30	41	40	75	19	20	142	YR240020DA
25	G 1	150,5	36	67	24	30	41	47	86	21	25	155	YR240025DA
32	G 1 1/4	160,5	41	67	24	30	41	57	95	22	32	155	YR240032DA
40	G 1 1/2	198,5	57	83	24	36,5	44,5	69	101	22	38	213	YR240040DA
50	G 2	212	64	83	24	36,5	44,5	82	120	25	47	213	YR240050DA
65	G 2 1/2	265,5	85	100	24	42,5	49,5	113	165	30	65	276	YR240065DA
80	G 3	296	94.5	110	24	49	53	135	188	33	80	366	YR240080DA
100	G 4	348	116	125	24	55	58	166	225	39	100	366	YR240100DA

Single acting

Ø	DN	A	B	C	D	E	F	ØG	H	L	ØM	N	Part no.
8	G 1/4	136	29	67	24	30	41	32	65	17	15	142	YR240008SR
10	G 3/8	136	29	67	24	30	41	32	65	17	15	142	YR240010SR
15	G 1/2	136	29	67	24	30	41	32	65	17	15	142	YR240015SR
20	G 3/4	143	32	67	24	30	41	40	75	19	20	142	YR240020SR
25	G 1	166,5	36	83	24	30	41	47	86	21	25	155	YR240025SR
32	G 1 1/4	176,5	41	83	24	36,5	44,5	57	95	22	32	155	YR240032SR
40	G 1 1/2	215,5	57	100	24	42,5	49,5	69	101	22	38	213	YR240040SR
50	G 2	229	64	100	24	42,5	49,5	82	120	25	47	213	YR240050SR
65	G 2 1/2	290,5	85	125	24	55	58	113	165	30	65	276	YR240065SR
80	G 3	351	94.5	155	34	70	70	135	188	33	80	366	YR240080SR
100	G 4	388	116	155	34	70	70	166	225	39	100	366	YR240100SR

Actuator sizing: air supply actuator 5,5 bar (80 psi) min. with ΔP valve 16 bar (232 psi) max

YR250

Ball valve 2/2 AISI 316 with manual lever or rotary actuator

- Full-bore ball valve
- Anti-blowout stem
- Antistatic device
- Top-flange according to DIN-ISO 5211
- Stem sealing with Chevron rings

TECHNICAL CHARACTERISCTICS

Temperature	-20 ÷ 200 °C
Fluid	air, water, chemical agents, etc
Working pressure	Max PN 63
Thread ends	GAS UNI 338 - ISO R/228 - DIN 259 - BSPP
Rotary angle	90°
Flow direction	both directions

CONSTRUCTIVE CHARACTERISCTICS

Body	CF8M (1)
End cap	CF8M (2)
Ball	stainless steel (AISI 316) (3)
Gasket	15% R - P.T.F.E* (4)
Seat ring	P.T.F.E. (5)
Thrust washer	P.T.F.E. (6)
Gland packing	P.T.F.E. (7)
Gland nut	stainless steel (AISI 304) (8)
Piston rod	stainless steel (AISI 304) (9)
Washer	stainless steel (AISI 304) (10)
Gland ring	stainless steel (AISI 304) (11)
O-ring	viton (12)

CODIFICATION KEY

Y	R	2	5	0	0	1	0	D	A
1					2			3	

1 Series	2 Size	3 Version
YR250 = Ball valve 2/2 AISI 316 with manual lever or rotary actuator	**008** = 8 mm **010** = 10 mm **015** = 15 mm **020** = 20 mm **025** = 25 mm **032** = 32 mm **040** = 40 mm **050** = 50 mm **065** = 65 mm **080** = 80 mm	**LM** = manual lever **DA** = double acting **SR** = single acting

Pressure - temperature diagram

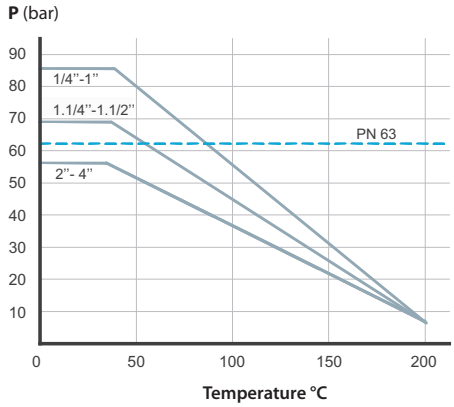

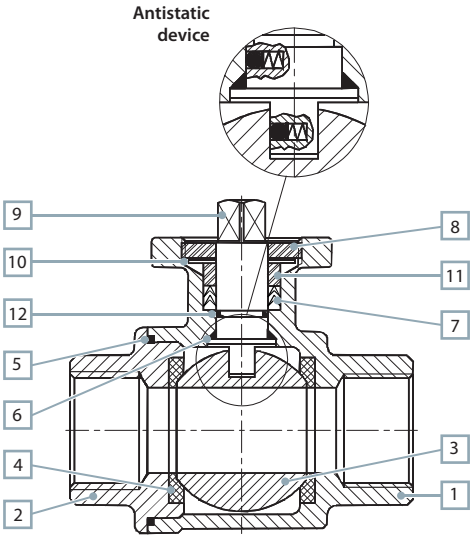

* **R-P.T.F.E.:** Reinforced P.T.F.E. (15% glass fibre)

Subject to change

With lever

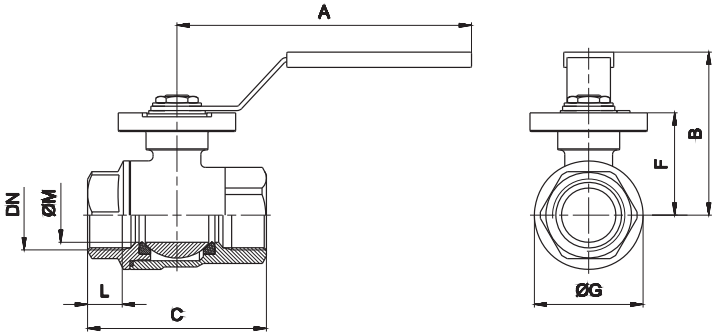

Ø	DN	A	B	C	L	ØM	F	ØG	Square	ISO 5211	Part no.
8	G 1/4	120	59	47	9,7	11	36	42	9	F03	YR250008LM
10	G 3/8	120	59	47	10,1	12,5	36	42	9	F03	YR250010LM
15	G 1/2	120	63	57	13,2	15	38	36	9	F03 - F04	YR250015LM
20	G 3/4	120	70	64	14,5	20	42	44	9	F03 - F04	YR250020LM
25	G 1	140	74	77	16,8	25	45	51	11	F04 - F05	YR250025LM
32	G 1 1/4	150	88	90	19,1	32	56	64	11	F04 - F05	YR250032LM
40	G 1 1/2	200	94	105	19,1	40	62	77	14	F05 - F07	YR250040LM
50	G 2	200	102	122	23,4	50	70	92	14	F05 - F07	YR250050LM
65	G 2 1/2	255	140	154	26,7	65	95	112	17	F07 - F10	YR250065LM
80	G 3	255	153	173	29,8	76	120	140	17	F07 - F10	YR250080LM

Double acting/single acting

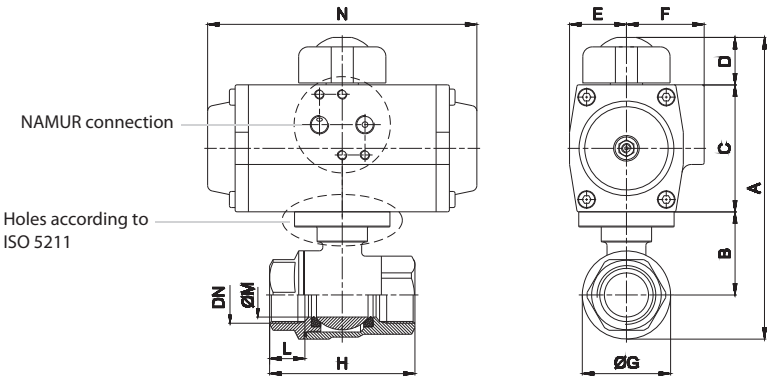

Double acting

Ø	DN	A	B	C	D	E	F	ØG	H	L	ØM	N	Part no.
8	G 1/4	126	36	45	24	22,5	28,5	42	47	9,7	11	115	YR250008DA
10	G 3/8	126	36	45	24	22,5	28,5	42	47	10,1	12,5	115	YR250010DA
15	G 1/2	147	38	67	24	30	41	36	57	13,2	15	142	YR250015DA
20	G 3/4	155	42	67	24	30	41	44	64	14,5	20	142	YR250020DA
25	G 1	161,5	45	67	24	30	41	51	77	16,8	25	142	YR250025DA
32	G 1 1/4	195	56	83	24	36,5	44,5	64	90	19,1	32	155	YR250032DA
40	G 1 1/2	207,5	62	83	24	36,5	44,5	77	105	19,1	40	155	YR250040DA
50	G 2	240	70	100	24	42,5	49,5	92	122	23,4	50	213	YR250050DA
65	G 2 1/2	285	95	110	24	49	53	112	154	26,7	65	236	YR250065DA
80	G 3	324	120	110	24	49	53	140	173	29,8	80	236	YR250080DA

Single acting

Ø	DN	A	B	C	D	E	F	ØG	H	L	ØM	N	Part no.
8	G 1/4	148	36	67	24	30	41	42	47	9,7	11	142	YR250008SR
10	G 3/8	148	36	67	24	30	41	42	47	10,1	12,5	142	YR250010SR
15	G 1/2	147	38	67	24	30	41	36	57	13,2	15	142	YR250015SR
20	G 3/4	171	42	83	24	36,5	44,5	44	64	14,5	20	155	YR250020SR
25	G 1	177,5	45	83	24	36,5	44,5	51	77	16,8	25	155	YR250025SR
32	G 1 1/4	212	56	100	24	42,5	49,5	64	90	19,1	32	213	YR250032SR
40	G 1 1/2	224,5	62	100	24	42,5	49,5	77	105	19,1	40	213	YR250040SR
50	G 2	250	70	110	24	49	53	92	122	23,4	50	236	YR250050SR
65	G 2 1/2	300	95	125	24	55	58	112	154	26,7	65	276	YR250065SR
80	G 3	369	120	155	24	70	70	140	173	29,8	80	366	YR250080SR

Actuator sizing: air supply actuator 5.5 bar (80 psi) min.with ΔP valve 16 bar (232 psi) max

YR260

Ball valve 2/2 AISI 316 (3 pieces) with manual lever or rotary actuator

- Full-bore ball valve
- Anti-blowout stem
- Antistatic device
- Top-flange according to DIN-ISO 5211
- Stem sealing with Chevron rings

TECHNICAL CHARACTERISCTICS

Temperature	-25 ÷ 200 °C
Fluid	air, water, chemical agents, etc
Working pressure	Max PN 63
Thread ends	GAS UNI 338 - ISO R/228 - DIN 259 - BSPP
Rotary angle	90°
Flow direction	both directions

CONSTRUCTIVE CHARACTERISCTICS

Body	CF8M (1)
End cap	CF8M (2)
Ball	stainless steel (AISI 316) (3)
Washer	stainless steel (AISI 304) (4)
Nut	stainless steel (AISI 304) (5)
Screw	stainless steel (AISI 304) (6)
Gasket	15% R - P.T.F.E* (7)
Seat ring	P.T.F.E. (8)
Thrust washer	P.T.F.E. (9)
Piston rod	stainless steel (AISI 304) (10)
O-ring	viton (11)
Packing	P.T.F.E. (12)
Gland ring	stainless steel (AISI 304) (13)
Washer	stainless steel (AISI 304) (14)
Gland nut	stainless steel (AISI 304) (15)

CODIFICATION KEY

Y	R	2	6	0	0	1	0	D	A
1					2			3	

1 Series	2 Size	3 Version
YR260 = Ball valve 2/2 AISI 316 (3 pieces) with manual lever or rotary actuator	**008** = 8 mm **010** = 10 mm **015** = 15 mm **020** = 20 mm **025** = 25 mm **032** = 32 mm **040** = 40 mm **050** = 50 mm **065** = 65 mm **080** = 80 mm	**LM** = manual lever **DA** = double acting **SR** = single acting

Pressure - temperature diagram

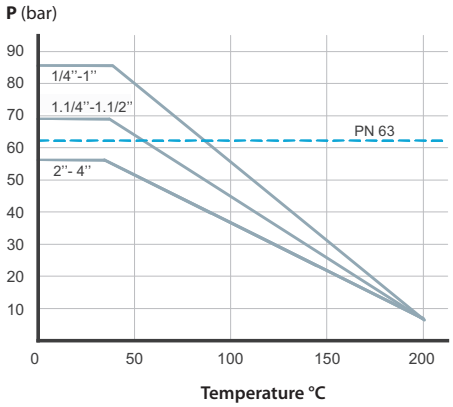

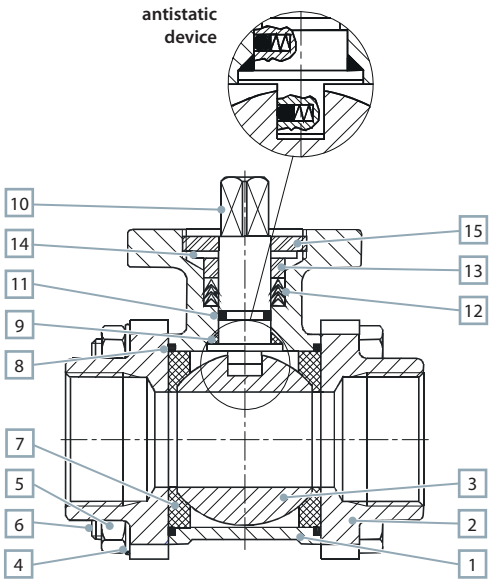

* **R-P.T.F.E.:** Reinforced P.T.F.E. (15% glass fibre)

Subject to change

With lever

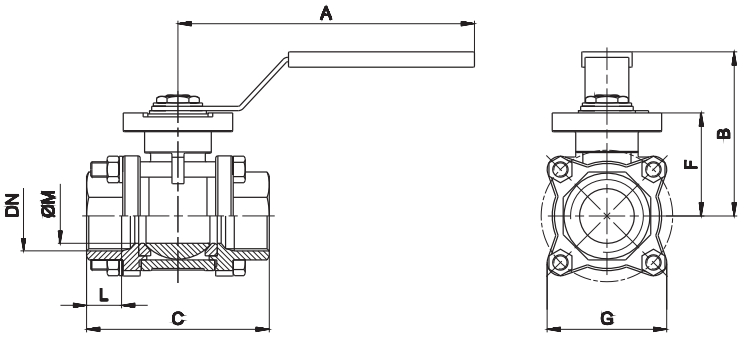

Ø	DN	A	B	C	L	ØM	F	G	Square	ISO 5211	Part no.
8	G 1/4	120	59	47	9,7	11	36	42	9	F03	YR260008LM
10	G 3/8	120	59	47	10,1	12,5	36	42	9	F03	YR260010LM
15	G 1/2	120	63	54	13,2	15	38	50	9	F03	YR260015LM
20	G 3/4	140	70	73	14,5	20	42	54	11	F04 - F05	YR260020LM
25	G 1	140	74	79	16,8	25	45	58	11	F04 - F05	YR260025LM
32	G 1 1/4	204	88	90	19,1	32	56	72	14	F05 - F07	YR260032LM
40	G 1 1/2	204	94	102	19,1	40	62	80	14	F05 - F07	YR260040LM
50	G 2	204	102	118	23,4	50	70	92	14	F05 - F07	YR260050LM
65	G 2 1/2	255	140	149	26,7	65	102	120	17	F07 - F10	YR260065LM
80	G 3	255	153	180	29,8	80	112	194	17	F07 - F10	YR260080LM

Double acting/single acting

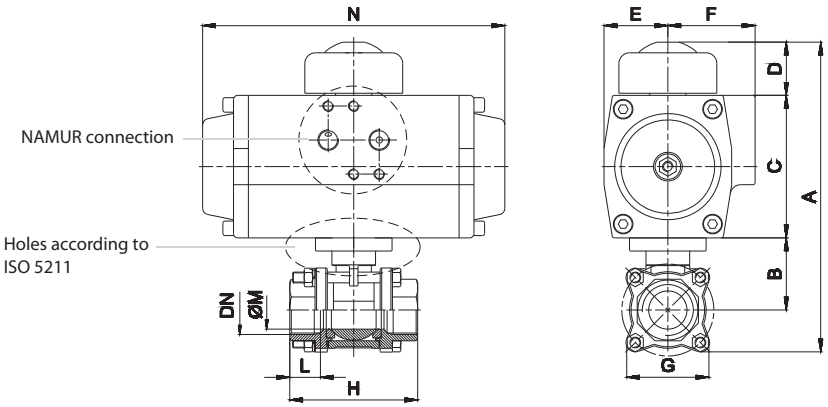

Double acting

Ø	DN	A	B	C	D	E	F	ØG	H	L	ØM	N	Part no.
8	G 1/4	126	36	45	24	22,5	28,5	42	47	9,7	11	115	YR260008DA
10	G 3/8	126	36	45	24	22,5	28,5	42	47	10,1	12,5	115	YR260010DA
15	G 1/2	154	38	67	24	30	41	50	54	13,2	15	142	YR260015DA
20	G 3/4	160	42	67	24	30	41	54	73	14,5	20	142	YR260020DA
25	G 1	165	45	67	24	30	41	58	79	16,8	25	142	YR260025DA
32	G 1 1/4	199	56	83	24	36,5	44,5	72	90	19,1	32	155	YR260032DA
40	G 1 1/2	209	62	83	24	36,5	44,5	80	102	19,1	40	155	YR260040DA
50	G 2	240	70	100	24	42,5	49,5	92	118	23,4	50	213	YR260050DA
65	G 2 1/2	296	102	110	24	49	53	120	149	26,7	65	236	YR260065DA
80	G 3	343	112	110	24	49	53	194	180	29,8	80	236	YR260080DA

Single acting

Ø	DN	A	B	C	D	E	F	ØG	H	L	ØM	N	Part no.
8	G 1/4	148	36	67	24	30	41	42	47	9,7	11	142	YR260008SR
10	G 3/8	148	36	67	24	30	41	42	47	10,1	12,5	142	YR260010SR
15	G 1/2	154	38	67	24	30	41	50	54	13,2	15	142	YR260015SR
20	G 3/4	176	42	83	24	36,5	44,5	54	73	14,5	20	155	YR260020SR
25	G 1	181	45	83	24	36,5	44,5	58	79	16,8	25	155	YR260025SR
32	G 1 1/4	216	56	100	24	42,5	44,5	72	90	19,1	32	213	YR260032SR
40	G 1 1/2	226	62	100	24	42,5	49,5	80	102	19,1	40	213	YR260040SR
50	G 2	250	70	110	24	49	53	92	118	23,4	50	236	YR260050SR
65	G 2 1/2	311	102	125	24	55	58	120	149	26,7	65	276	YR260065SR
80	G 3	388	112	155	24	70	70	194	180	29,8	80	366	YR260080SR

Actuator sizing: air supply actuator 5.5 bar (80 psi) min. with ΔP valve 16 bar (232 psi) max

YR270

L-shaped ball valve 3/2 AISI 316 with manual lever or rotary actuator

- Full-bore ball valve
- Anti-blowout stem
- Antistatic device
- Top-flange according to DIN-ISO 5211
- Stem sealing with Chevron rings

TECHNICAL FEATURES

Temperature	-15 ÷ 230 °C
Fluid	air, water, chemical agents, etc.
Working pressure	Max PN 64
Thread ends	GAS UNI 338 - ISO R/228 - DIN 259 - BSPP
Rotary angle	90°
Flow direction	both directions

CONSTRUCTIVE FEATURES

Body	stainless steel (AISI 316) (1)
End cap	stainless steel (AISI 316) (2)
Ball	stainless steel (AISI 316) (3)
Seat ring	P.T.F.E. (4)
Body seal	P.T.F.E. (5)
Thrust washer	P.T.F.E. (6)
Stem packing	P.T.F.E. (7)
Gland ring	P.T.F.E. (8)
Bevel washer	stainless steel (AISI 410) (9)
Piston rod	stainless steel (AISI 316) (10)
Lock nut	stainless steel (AISI 304) (11)
O-ring	viton (12)

CODIFICATION KEY

Y	R	2	7	0	0	1	0	D	A
1					2			3	

1 Series	2 Size	3 Version
YR270 = L-shaped ball valve 3/2 AISI 316 with manual lever or rotary actuator	**008** = 8 mm **010** = 10 mm **015** = 15 mm **020** = 20 mm **025** = 25 mm **032** = 32 mm **040** = 40 mm **050** = 50 mm	**LM** = manual lever **DA** = double acting **SR** = single acting

Pressure - temperature diagram

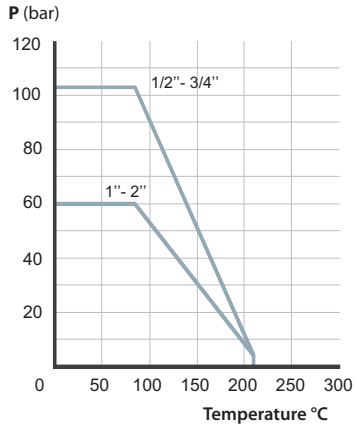

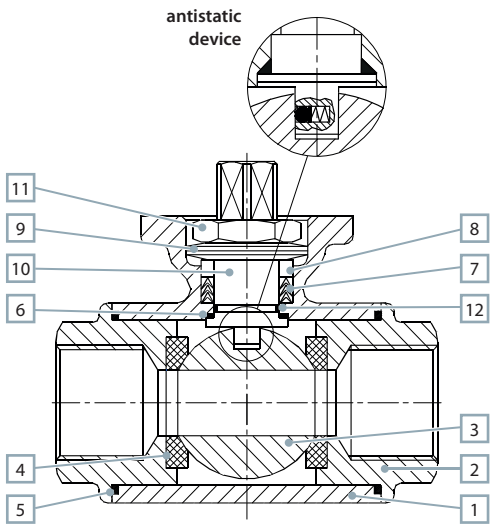

3 VALVES

With lever

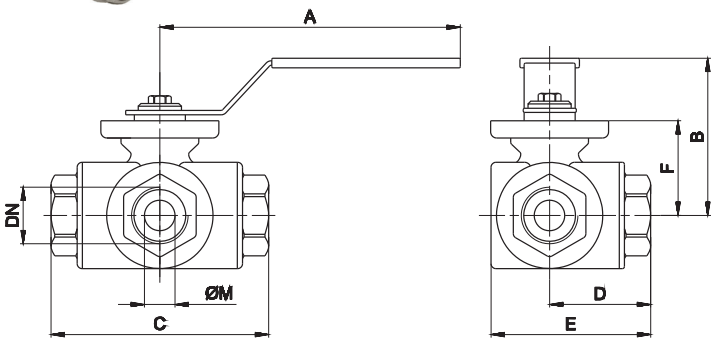

Operating draft

flow path variations

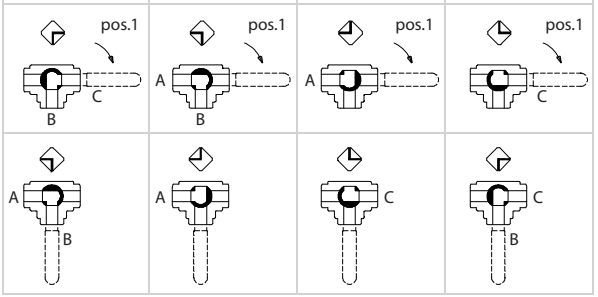

The ball holes position is showed on the stem milling
A, B, C = outlets Lever rotation: 90°
To change outlets combination please operate as follow:
- remove the lever
- turn the stem into the desidered starting position (pos.1)
- reset the lever

Ø	DN	A	B	C	D	E	F	ØM	Square	ISO 5211	Part no.
8	G 1/4	115	80,5	75,7	38,5	61	40,5	9,5	9	F04	YR270008LM
10	G 3/8	115	80,5	75,7	38,5	61	40,5	11	9	F04	YR270010LM
15	G 1/2	115	80,5	75,7	38,5	61	40,5	12,7	9	F04	YR270015LM
20	G 3/4	115	86	86,5	44,5	73	45	16	9	F04	YR270020LM
25	G 1	135	94,5	102,5	52	83	56,5	20	9	F05	YR270025LM
32	G 1 1/4	180	103	118,5	58,5	96	60,5	25	11	F04 - F05	YR270032LM
40	G 1 1/2	205	124,5	126	64,5	106,5	78,5	32	11	F05 - F07	YR270040LM
50	G 2	205	131	149	75	126	87	38,1	14	F05 - F07	YR270050LM

Double acting/single acting

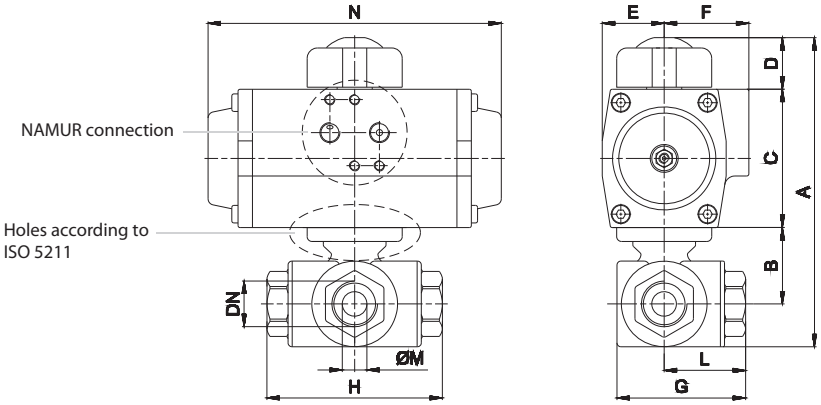

Double acting

Ø	DN	A	B	C	D	E	F	G	H	L	ØM	N	Part no.
8	G 1/4	157	40,5	67	24	30	41	61	75,7	38,5	9,5	142	YR270008DA
10	G 3/8	157	40,5	67	24	30	41	61	75,7	38,5	11	142	YR270010DA
15	G 1/2	157	40,5	67	24	30	41	61	75,7	38,5	12,7	142	YR270015DA
20	G 3/4	177	45	83	24	36,5	44,5	73	86,5	44,5	16	155	YR270020DA
25	G 1	196	56,5	83	24	36,5	44,5	83	103	52	20	155	YR270025DA
32	G 1 1/4	208	60,5	83	24	36,5	44,5	96	119	58,5	25	155	YR270032DA
40	G 1 1/2	244	78,5	100	24	42,5	49,5	106,5	126	64,5	32	213	YR270040DA
50	G 2	291	87	125	24	55	58	126	149	75	38,1	276	YR270050DA

Single acting

Ø	DN	A	B	C	D	E	F	G	H	L	ØM	N	Part no.
8	G 1/4	173	40,5	83	24	36,5	44,5	61	75,7	38,5	9,5	155	YR270008SR
10	G 3/8	173	40,5	83	24	36,5	44,5	61	75,7	38,5	11	155	YR270010SR
15	G 1/2	173	40,5	83	24	36,5	44,5	61	75,7	38,5	12,7	155	YR270015SR
20	G 3/4	194	45	100	24	42,5	49,5	73	86,5	44,5	16	213	YR270020SR
25	G 1	206	56,5	100	24	42,5	49,5	83	103	52	20	213	YR270025SR
32	G 1 1/4	225	60,5	100	24	42,5	49,5	96	119	58,5	25	213	YR270032SR
40	G 1 1/2	254	78,5	110	24	49	53	106,5	126	64,5	32	236	YR270040SR
50	G 2	318	87	142	34	64	69	126	149	75	38,1	310	YR270050SR

Actuator sizing: air supply actuator 5.5 bar (80 psi) min. with ΔP valve 16 bar (232 psi) max

YR280

Brass L-shaped ball valve 3/2 with manual lever or rotary actuator

- Full-bore ball valve
- Anti-blowout stem
- Antistatic device
- Top-flange according to DIN-ISO 5211

TECHNICAL FEATURES

Temperature	-20 ÷ 160 °C
Fluid	air, water, chemical agents, etc
Working pressure	DN 1/4" ÷DN3/4"PN30 DN 1"PN16 DN1"1/4 ÷DN2"PN10
Thread ends	UNI ISO 7/1-Rp - DIN 2999 (GAS)
Rotary angle	90°
Flow direction	both directions

CONSTRUCTIVE FEATURES

Body	nickel-plated OT 58 (1)
End cap	nickel-plated OT 58 (2)
Ball	nickel-plated OT 58 (3)
Seat ring	P.T.F.E. (4)
Thrust washer	P.T.F.E. (5)
Gasket stem	P.T.F.E. (6)
Gland nut	nickel-plated OT 58 (7)
Piston rod	nickel-plated OT 58 (8)
O-ring	viton (9 - 10)

CODIFICATION KEY

Y	R	2	8	0	0	1	0	D	A
1					2			3	

1 Series	2 Size	3 Version
YR280 = Brass L-shaped ball valve 3/2 with manual lever or rotary actuator	**008** = 8 mm **010** = 10 mm **015** = 15 mm **020** = 20 mm **025** = 25 mm **032** = 32 mm **040** = 40 mm **050** = 50 mm	**LM** = manual lever **DA** = double acting **SR** = single acting

Pressure - temperature diagram

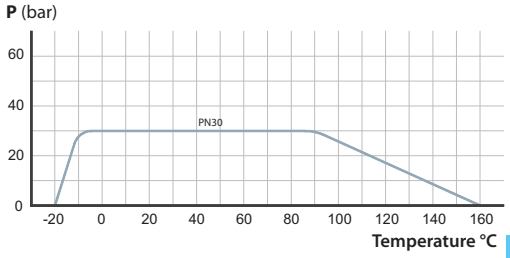

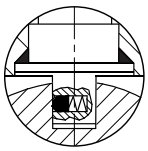

antistatic device

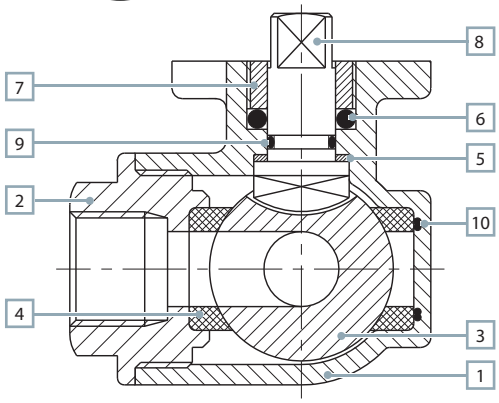

With manual lever

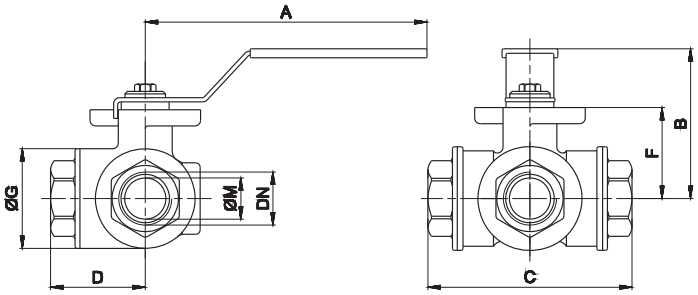

Operating draft

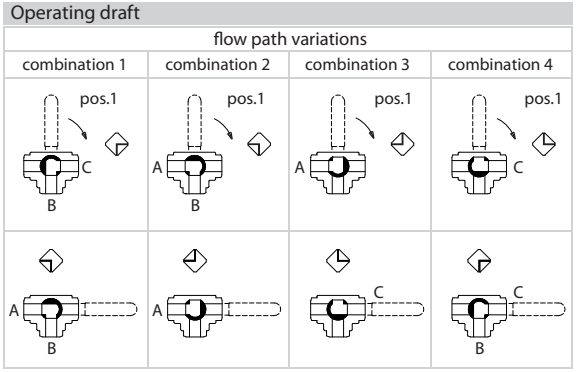

The ball holes position is showed on the stem milling
A, B, C = outlets Lever rotation: 90°
To change outlets combination please operate as follow:
- remove the lever
- turn the stem into the desidered starting position (pos.1)
- reset the lever

Ø	DN	A	B	C	D	F	ØG	ØM	Square	ISO 5211	Part no.
8	G1/4	120	59	65	53	32,5	34	10	9	F03	**YR280008LM**
10	G3/8	120	59	65	53	32,5	34	10	9	F03	**YR280010LM**
15	G1/2	120	62	78	60,5	32,5	40	14	9	F03	**YR280015LM**
20	G3/4	170	78	87	68	41,5	48	19	11	F05	**YR280020LM**
25	G1	170	83	105	82,5	47	60	24	11	F05	**YR280025LM**
32	G1 1/4	170	88	118	99	60	72	30	11	F05	**YR280032LM**
40	G1 1/2	220	111	134	114	74	86	38	14	F07	**YR280040LM**
50	G2	220	120,5	161	138	85	112	48	14	F07	**YR280050LM**

Double acting/spring return

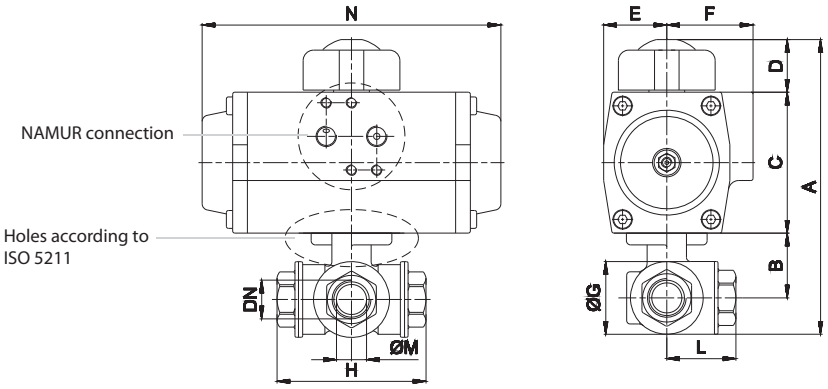

Double acting

Ø	DN	A	B	C	D	E	F	ØG	H	L	ØM	N	Part no.
8	G1/4	118,5	32,5	45	24	22,5	22,5	34	65	53	10	115	**YR280008DA**
10	G3/8	118,5	32,5	45	24	22,5	22,5	34	65	53	10	115	**YR280010DA**
15	G1/2	143,5	32,5	67	24	30	41	40	78	60,5	14	142	**YR280015DA**
20	G3/4	172,5	41,5	83	24	36,5	44,5	48	87	68	19	155	**YR280020DA**
25	G1	184	47	83	24	36,5	44,5	60	105	82,5	24	155	**YR280025DA**
32	G1 1/4	203	60	83	24	36,5	44,5	72	118	99	30	155	**YR280032DA**
40	G1 1/2	241	74	100	24	42,5	49,5	86	134	114	38	213	**YR280040DA**
50	G2	265	85	100	24	42,5	49,5	112	161	138	48	213	**YR280050DA**

Spring return

Ø	DN	A	B	C	D	E	F	ØG	H	L	ØM	N	Part no.
8	G1/4	140,5	32,5	67	24	30	41	34	65	53	10	142	**YR280008SR**
10	G3/8	140,5	32,5	67	24	30	41	34	65	53	10	142	**YR280010SR**
15	G1/2	143,5	32,5	67	24	30	41	40	78	60,5	14	142	**YR280015SR**
20	G3/4	172,5	41,5	83	24	36,5	44,5	48	87	68	19	155	**YR280020SR**
25	G1	184	47	83	24	36,5	44,5	60	105	82,5	24	155	**YR280025SR**
32	G1 1/4	220	60	100	24	42,5	49,5	72	118	99	30	213	**YR280032SR**
40	G1 1/2	241	74	100	24	42,5	49,5	86	134	114	38	213	**YR280040SR**
50	G2	275	85	100	24	49	53	112	161	138	48	236	**YR280050SR**

Actuator sizing: air supply actuator 5.5 bar (80 psi) min. with ΔP valve 16 bar (232 psi) max

CSA-UL

Electropilots with "CSA-UL" Certification

Electropilots and valves are supplied with coil certified for United States and Canada. Products with this mark are certifield by the Canadian CSA organization in compliance with the standards required by the US (US on the right of the logo) and Canadian market (C on the left of the logo).

Certification N° 244884.

In compliance with:
CSA C22.2 No. 139-13
UL 429:2013

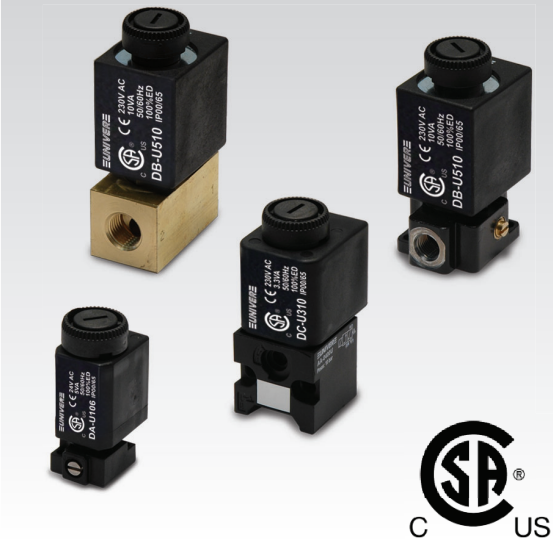

TECHNICAL CHARACTERISTICS

Ambient temperature	-10°C + 45°C
Duty cycle (%)	100
Tension tolerance	±10

U1 22 mm coil to be used with U1 electropilot

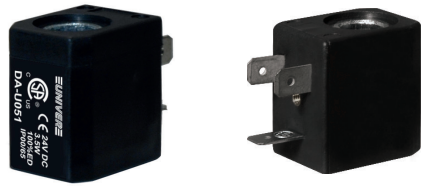

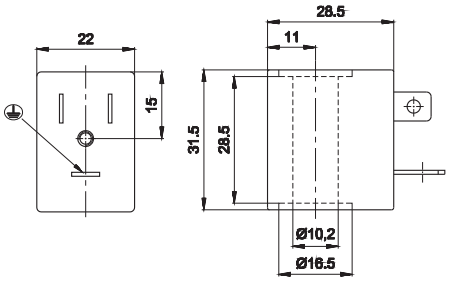

Duty cycle ED(a)	Ambient	Power consumption W		Tension tolerance	Rated	Weight	Part no.
%	temperature	hold	inrush	%	voltage	Kg	
100	-10°C+45°C	3,5	3,5	±10	12 V DC	0,06	**DA-U050**
100	-10°C+45°C	3,5	3,5	±10	24 V DC	0,06	**DA-U051**
100	-10°C+45°C	6	6	±10	12 V DC*	0,06	**DA-U101**
100	-10°C+45°C	6	6	±10	24 V DC	0,06	**DA-U102**
100	-10°C+45°C	6	6	±10	48 V DC*	0,06	**DA-U103**
100	-10°C+45°C	6	6	±10	110 V DC*	0,06	**DA-U104**
100	-10°C+45°C	5 VA (Max)	7,8 VA (Max)	±10	24 V AC/50-60 HZ	0,06	**DA-U106**
100	-10°C+45°C	5 VA (Max)	7,8 VA (Max)	±10	110 V AC/50-60 HZ	0,06	**DA-U108**
100	-10°C+45°C	5 VA (Max)	7,8 VA (Max)	±10	230 V AC/50-60 HZ	0,06	**DA-U124**

(*) = upon request

U2 30 mm coil to be used with U2 electropilot

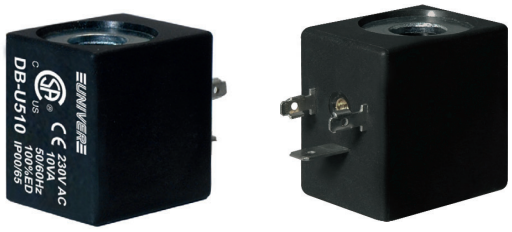

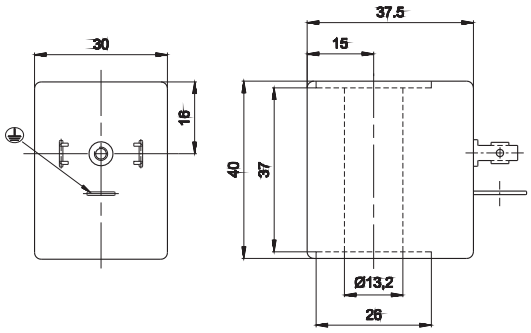

Duty cycle ED(a)	Ambient	Power consumption W		Tension tolerance	Rated	Weight	Part no.
%	temperature	hold	irush	%	voltage	Kg	
100	-10°C+45°C	11	11	±10	12 V DC	0,10	**DB-U501**
100	-10°C+45°C	11	11	±10	24 V DC	0,10	**DB-U502**
100	-10°C+45°C	11	11	±10	48 V DC*	0,10	**DB-U503**
100	-10°C+45°C	11	11	±10	110 V DC*	0,10	**DB-U504**
100	-10°C+45°C	10 VA (Max)	16 VA (Max)	±10	24 V AC/50-60 HZ	0,10	**DB-U507**
100	-10°C+45°C	10 VA (Max)	16 VA (Max)	±10	110 V AC/50-60 HZ	0,10	**DB-U509**
100	-10°C+45°C	10 VA (Max)	16 VA (Max)	±10	230 V AC/50-60 HZ	0,10	**DB-U510**

(*) = upon request

U3 30 mm coil to be used with U1 electropilot

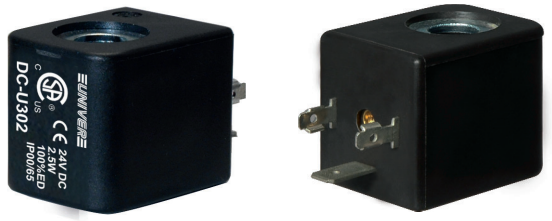

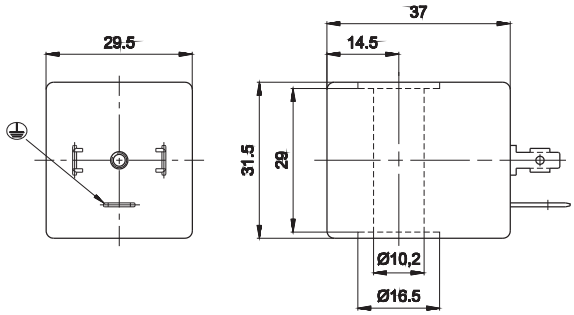

Duty cycle ED(a)	Ambient	Power consumption W		Tension tolerance	Rated	Weight	Part no.
%	temperature	hold	inrush	%	voltage	Kg	
100	-10°C+45°C	2,5	2,5	±10	12 V DC	0,08	**DC-U301**
100	-10°C+45°C	2,5	2,5	±10	24 V DC	0,08	**DC-U302**
100	-10°C+45°C	2,5	2,5	±10	110 V DC*	0,08	**DC-U304**
100	-10°C+45°C	3,3 VA (Max)	5 VA (Max)	±10	24 V AC/50-60 HZ	0,08	**DC-U307**
100	-10°C+45°C	3,3 VA (Max)	5 VA (Max)	±10	110 V AC/50-60 HZ	0,08	**DC-U309**
100	-10°C+45°C	3,3 VA (Max)	5 VA (Max)	±10	230 V AC/50-60 HZ	0,08	**DC-U310**

(a) = under continuons service maximum temperature will not compromise the functioning of the coil provided that the working position is ventilated
(*) = upon request

Connector for U1 coil

	Coil	Part no.
CONNECTOR		
	U1	**AM-5110**

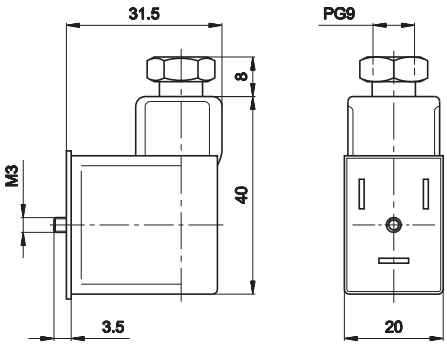

Protection according to IP 65. PG9 cable connection. 180° rotation on the coil LED and moulded cable are available upon request

Connector for U2, U3 coil

	Coil	Part no.
DIN 43650 CONNECTOR		
	U2/U3	**AM-5111**

Protection according to IP 65. PG9 cable connection. 360° rotation on the coil LED and moulded cable are available upon request

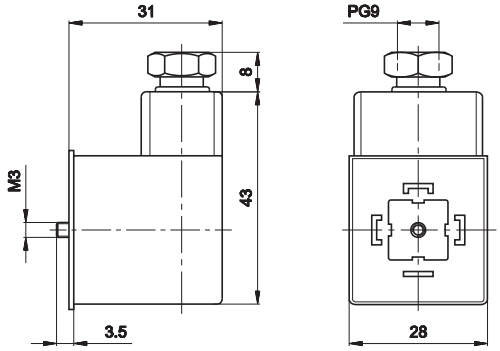

Coils matching with electropilots/valves

AA U1 Miniature electropilots

AB U2 Miniature electropilots

BE ISO 5599/1 valves size 1-2-3-4

AE ISO 5599/1 light series valves size 1-2

AC-N NAMUR valves

CL/CM UNIVERSAL valves G1/8 - G1/4

G7 26 mm - valves and solenoid valves

AC MIXED valves G1/8 - G1/4 - G1/2

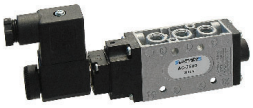

AF Poppet valves for compressed air G1/8 ÷ G1 1/2

AG Popper valves for vacuum G1/8 ÷ G1 1/2

HZE1S Shut-off valves

For technical details on electropilots/valves refer to our technical catalogue