LCA63

Unità di centraggio pneumatica,
doppia asta

L	C	A	6	3	0	4	0	E	A	R
1		2	3		4			5	6	7

1 Serie

LC = Unità di centraggio

2 Versione

A = Pneumatica, doppia asta

3 Taglia

63 = Ø 63 mm

4 Corse

015 = 15 mm
025 = 25 mm
040 = 40 mm
050 = 50mm
060 = 60 mm
075* = 75 mm
100* = 100 mm
110* = 110 mm

*** = Corse speciali sensore elettronico: DF-U**

5 Sensore di posizione

D = Pneumatico doppia alimentazione
N = Senza sensore (con piastra di chiusura)
E = Sensore elettronico con connettore M12 orientabile

6 Terminale asta

A = Asta per centraggi dislocati

7 Raschiastelo

R = Raschiastelo metallico

LCA63 _ _ _ EAR

UNIVERSAL Pneumatic retractable locating pin unit with double rod

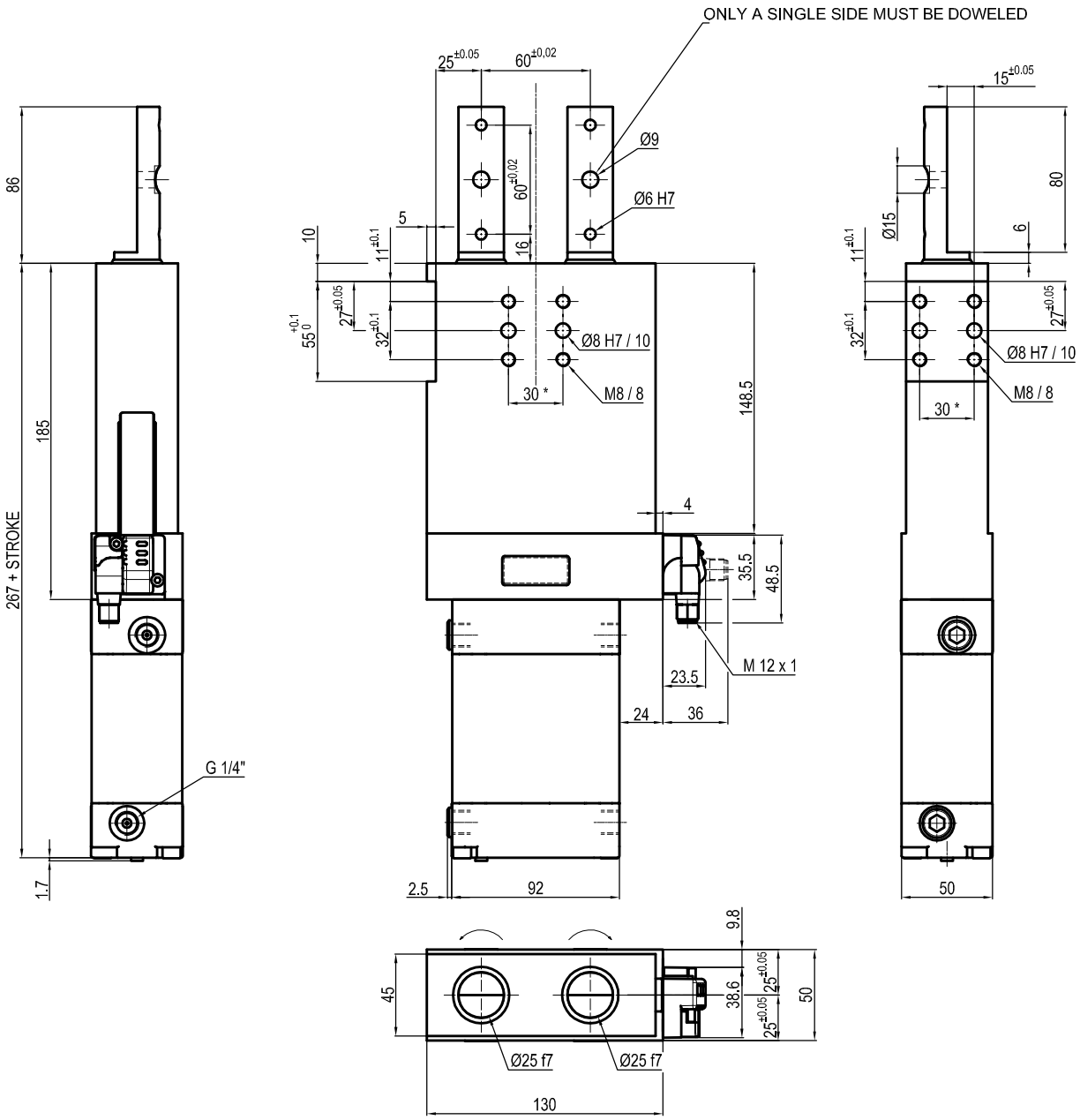

Bore Ø	Max. torque	Max. deflection moment	Weight
63 mm	20 Nm ±0.1°	20 Nm ±0.03°	5.8 Kg

Min./max. operating pressure: **0,4 / 0,6 MPa**
Operating temperature: **5° ÷ 45° C**
Strokes in mm.: **15 - 25 - 40 - 50 - 60**
Electronic sensor with M12 swivel connector that can be orientated at 0°or 90°
Supply voltage: 10÷30 Vdc
IP code: **IP 65**
Pneumatic ports on both sides

* : TOLERANCE BETWEEN DOWEL HOLES ± 0.02, TO SCREW HOLES ± 0.1

Subject to technical modification without notice.

LCA63 _ _ _ EAR

UNIVERSAL Pneumatic retractable locating pin unit with double rod strokes 75-100-110

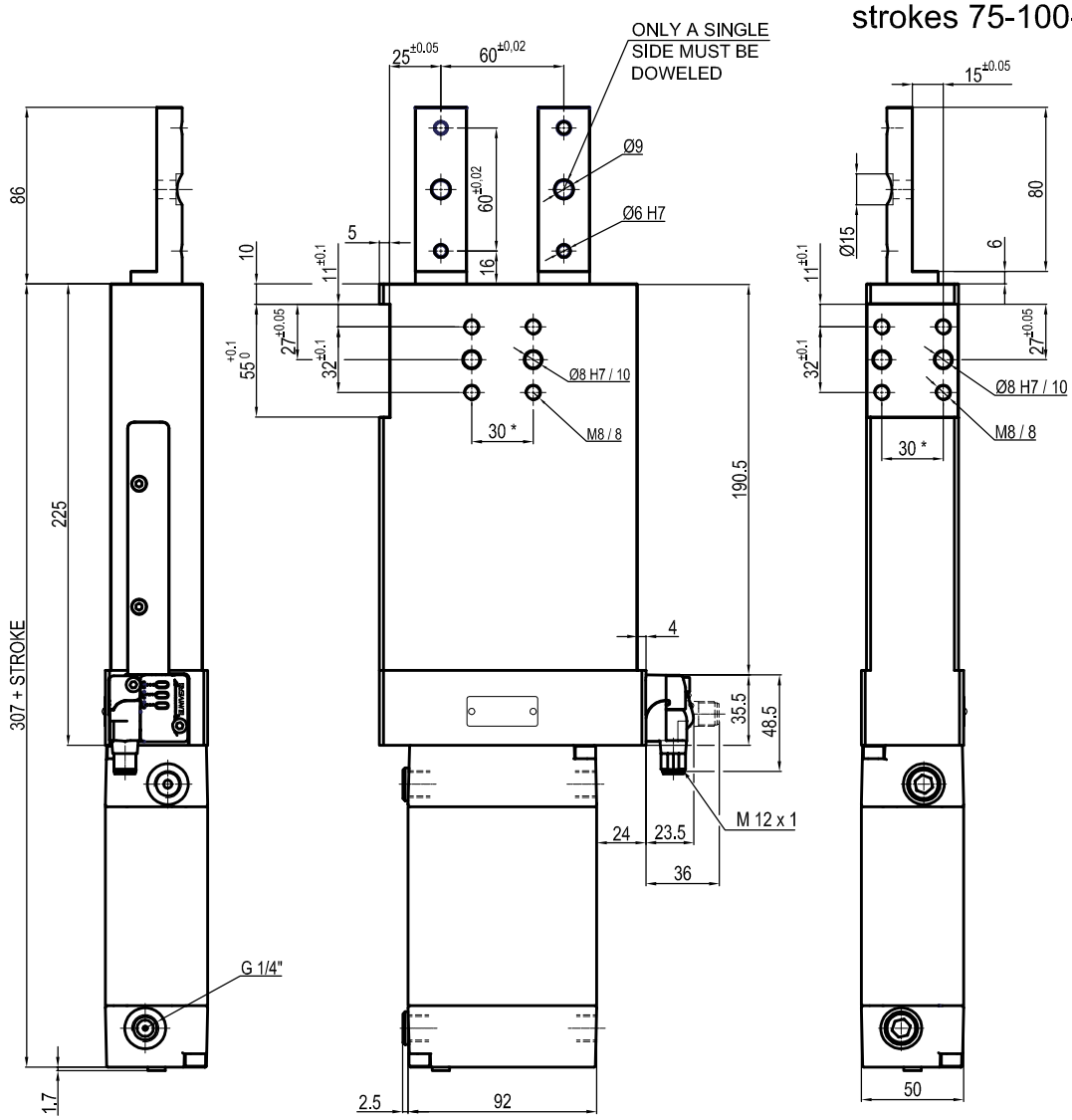

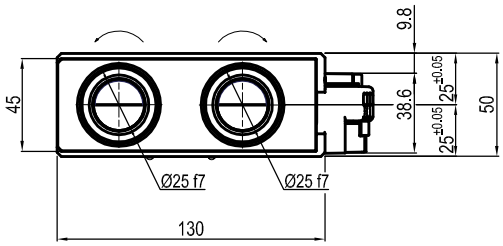

180° ORIENTABLE RODS

Bore Ø	Max. torque	Max. deflection moment	Weight
63 mm	20 Nm ±0.1°	20 Nm ±0.03°	5.8 Kg

Min./max. operating pressure: **0,4 / 0,6 MPa**
Operating temperature: **5° ÷ 45° C**
Strokes in mm.: **75 - 100 - 110**
Electronic sensor with M12 swivel connector that can be orientated at 0°or 90°
Supply voltage: 10÷30 Vdc
IP code: **IP 65**
Pneumatic ports on both sides

* : TOLERANCE BETWEEN DOWEL HOLES ± 0.02, TO SCREW HOLES ± 0.1

Subject to technical modification without notice.