LCT50

Unità di centraggio pneumatica irreversibile, doppia asta orientabile

L	C	T	5	0	0	4	0	E	A	R
1		2	3		4			5	6	7

1 Serie

LC = Unità di centraggio

2 Versione

T = Pneumatica irreversibile, doppia asta orientabile

3 Taglia

50 = Ø 50 mm

4 Corse

040 = 40 mm

5 Sensore di posizione

E = Sensore elettronico con connettore M12 orientabile
N = Senza sensore con piastra di chiusura

6 Terminale asta

A = Asta per centraggi dislocati
G = Asta per centraggi dislocati (piano asta in asse con piano di mezzeria)

7 Raschiastelo

R = Raschiastelo metallico

LCT50040 EAR

UNIVERSAL Retractable locating pin unit with toggle mechanism and two rods

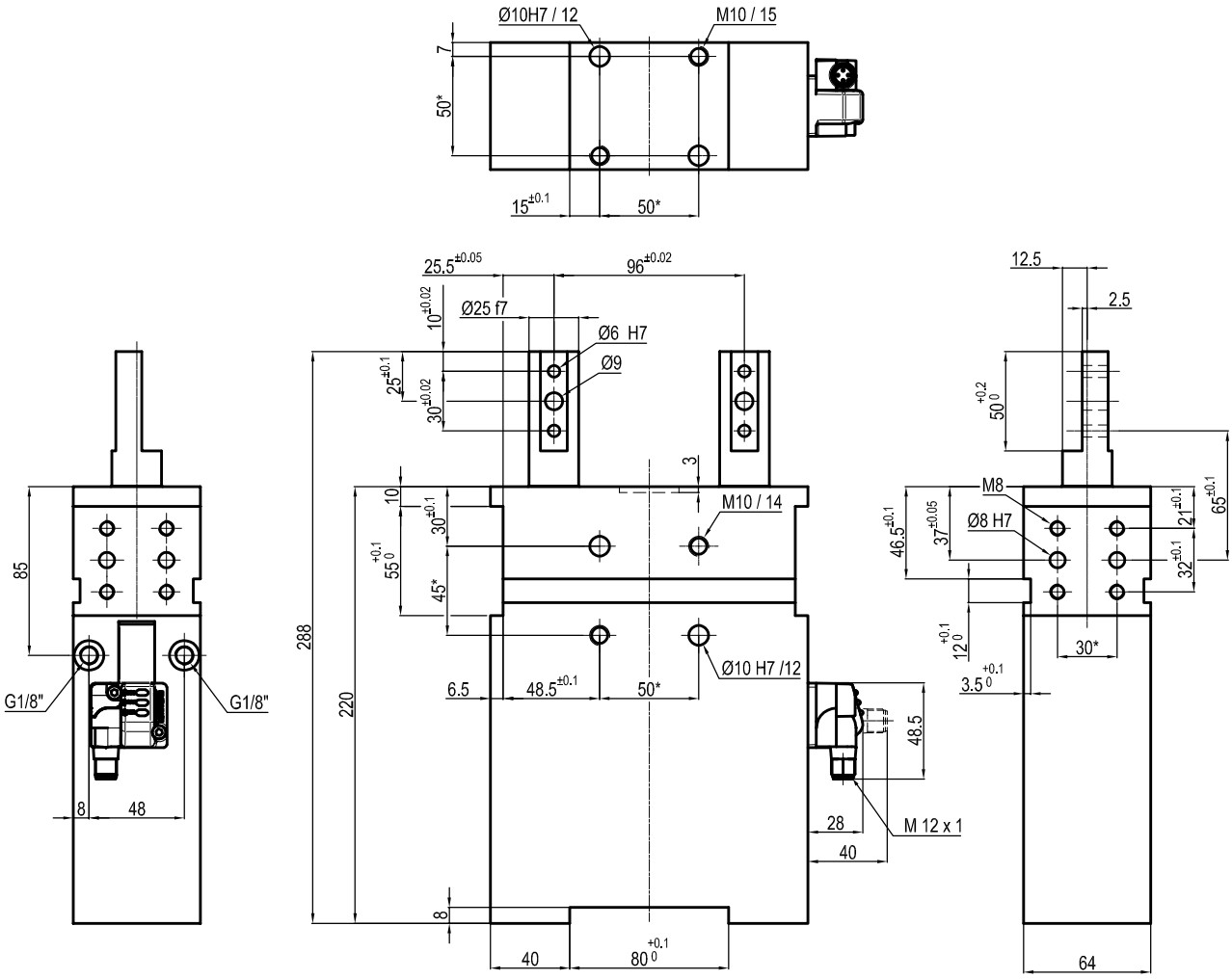

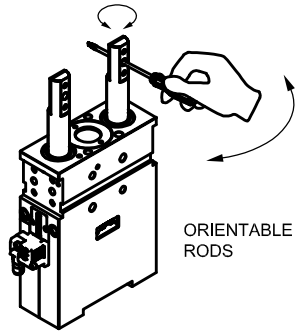

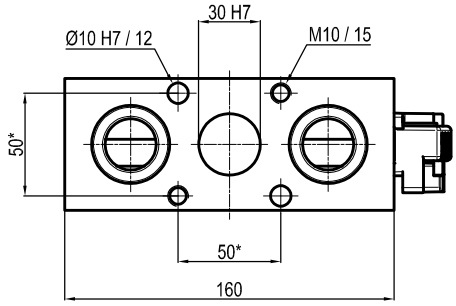

Bore Ø	Pull force at 0.5 MPa	Push force at 0.5 MPa	Weight
50 mm	6500 N	7150 N	7.2 Kg

* : TOLERANCE BETWEEN DOWEL HOLES ± 0.02, TO SCREW HOLES ± 0.1

Subject to technical modification without notice.

Min./max. operating pressure: 0,4 / 0,6 MPa
Operating temperature: 5° ÷ 45° C
Strokes in mm.: 40 mm

Electronic 24 Vdc sensor with M12 swivel connector that can be orientated at 0° or 90°
Supply voltage: 10÷30 Vdc

IP code: IP 65
Pneumatic ports on both sides

Max. side load: 400 N
Max. deflection: 0,1 mm, whit 40 mm stroke at max load
Max. offset: 200 mm from middle point

LCT50040 EGR

UNIVERSAL Retractable locating pin unit with toggle mechanism and two rods

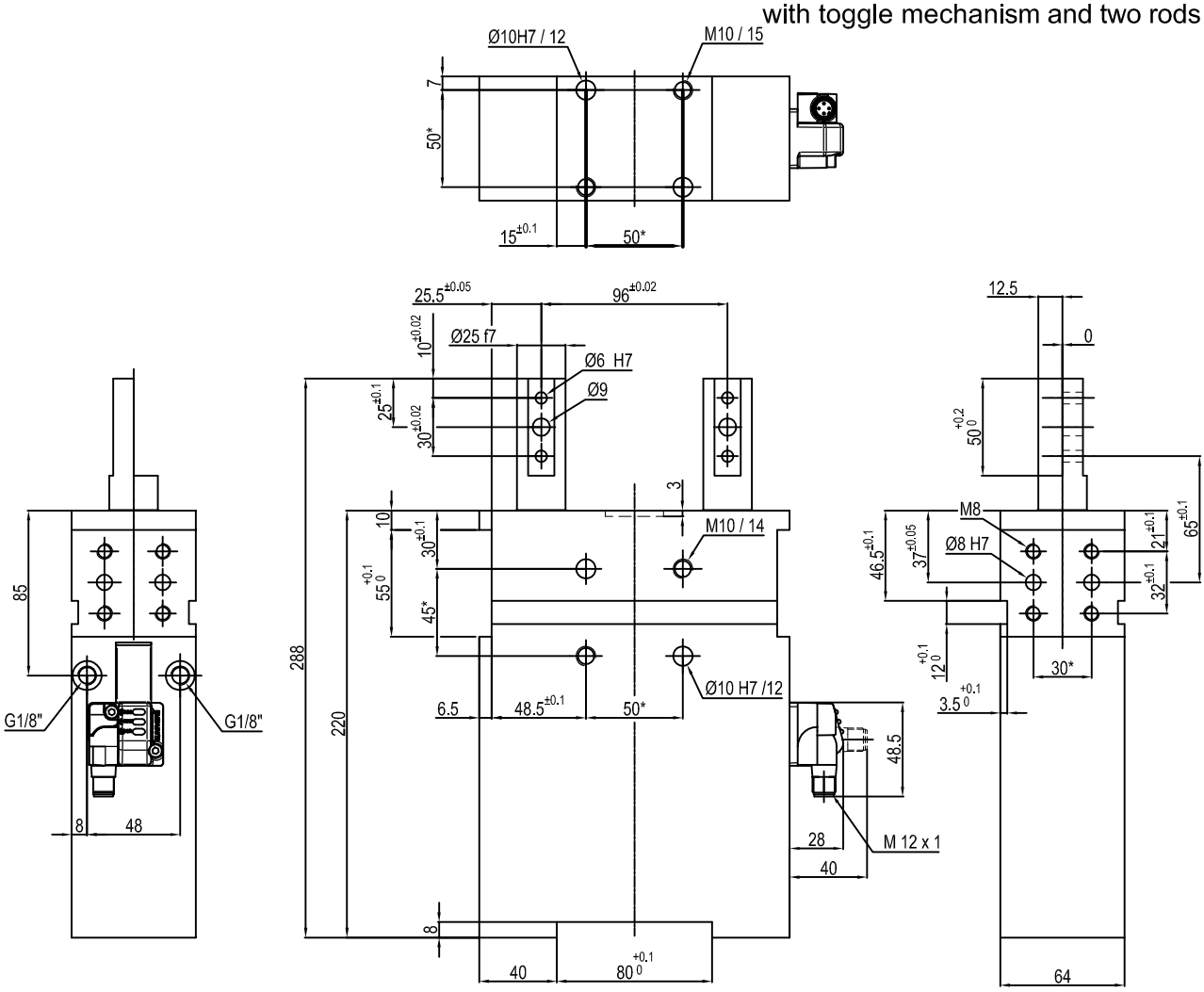

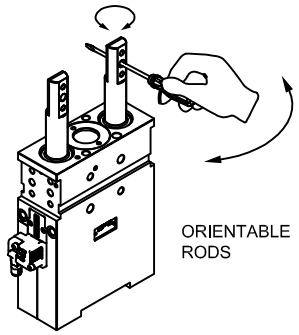

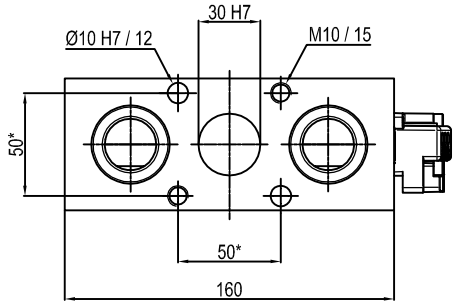

Bore Ø	Pull force at 0.5 MPa	Push force at 0.5 MPa	Weight
50 mm	6500 N	7150 N	7.2 Kg

* : TOLERANCE BETWEEN DOWEL HOLES ± 0.02,TO SCREW HOLES ± 0.1

Subject to technical modification without notice.

Min./max. operating pressure: 0,4 / 0,6 MPa
Operating temperature: 5° ÷ 45° C
Strokes in mm.: 40 mm

Electronic 24 Vdc sensor with M12 swivel connector that can be orientated at 0° or 90°
Supply voltage: 10÷30 Vdc

IP code: IP 65
Pneumatic ports on both sides

Max. side load: 400 N
Max. deflection: 0,1 mm, whit 40 mm stroke at max load
Max. offset: 200 mm from middle point